bsi.

...making excellence a habit.™

Please be aware that this PDF has been created from the original hardcopy document, which might not be in good condition and so the PDF might reflect this.

BSI Group
389 Chiswick High Road
London, W4 4AL
United Kingdom

T: +44 20 845 086 9001
F: +44 20 8996 7400
cservices@bsigroup.com
bsigroup.com

British Standards Limited
Registered in England no: 07864997
Registered address: 389 Chiswick High Road
London, W4 4AL, United Kingdom

AVA Documents
INVESTORS IN PEOPLE
Document Sharing Hub

Full document details: PP 8888-1:2007 Single Copy PDF

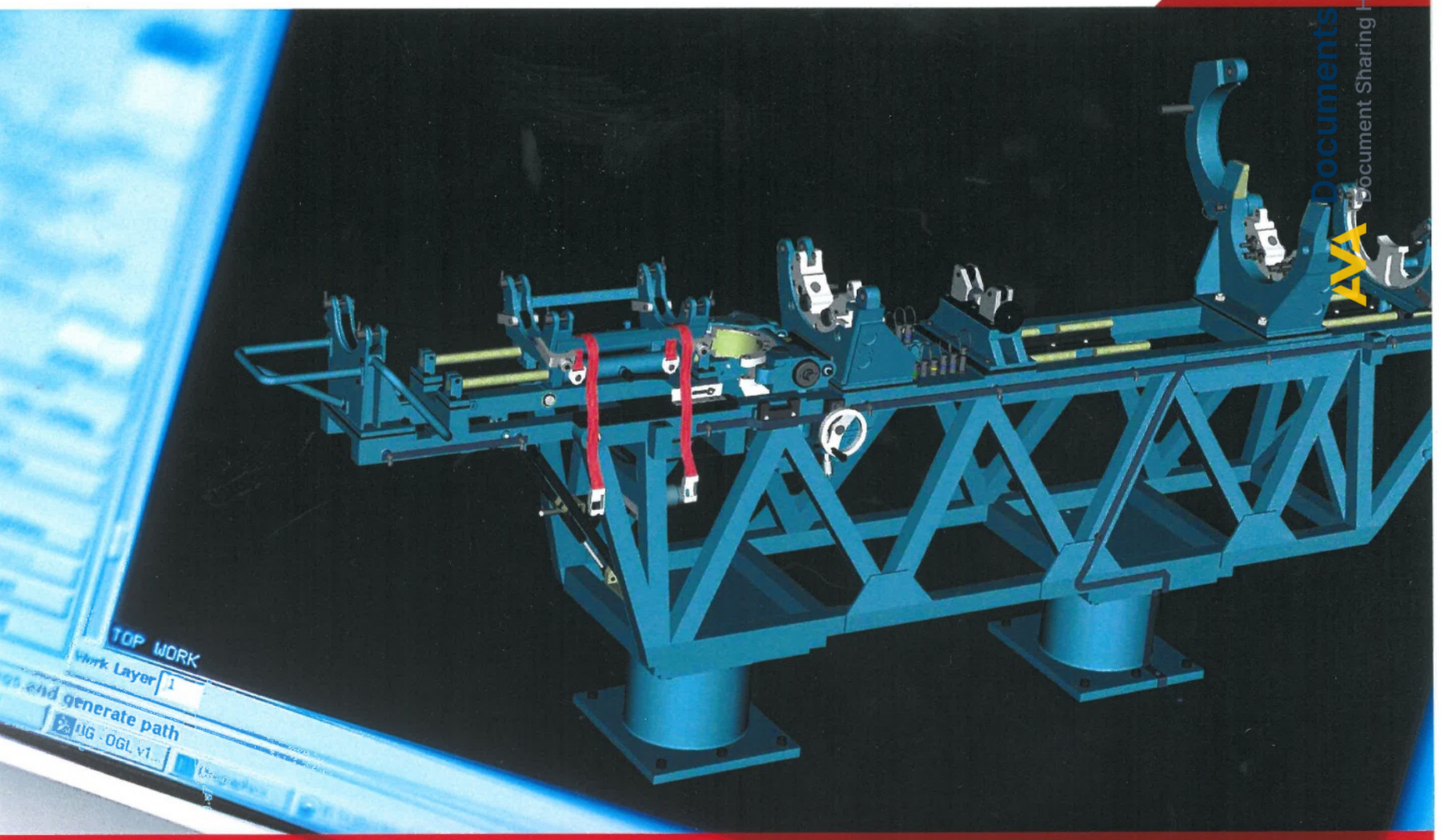

Drawing practice

A guide for schools and colleges to BS 8888:2006, Technical product specification (TPS)

raising standards worldwide™

British Standards

Full document details: PP 8888-1:2007 Single Copy PDF
Document Sharing Hub

Drawing Practice

A guide for schools and colleges to BS 8888:2006, Technical product specification (TPS)

Third edition

BSI LIBRARY
RECEIVED 13 MAR 2008
389 CHISWICK HIGH ROAD
LONDON
W4 4AL

Revised by Neil Phelps and Colin Simmons

British Standards

Documents
Document Sharing Hub
Full document details: PP 8888-1:2007 Single Copy PDF

Acknowledgements

BSI would like to thank George Torrens and colleagues from Loughborough University for their contribution to the drafting of previous editions of PP 8888-1.

First published in the UK in 2001
Second edition published in 2005
Reprint with corrections published in 2006
Third edition published in 2007

by
BSI
389 Chiswick High Road
London W4 4AL

© British Standards Institution 2001, 2005, 2007

All rights reserved. Except as permitted under the Copyright, Designs and Patents Act 1988, no part of this publication may be reproduced, stored in a retrieval system or transmitted in any form or by any means – electronic, photocopying, recording or otherwise – without prior permission in writing from the publisher.

While every care has been taken in developing and compiling the information herein, as a Guide to the use of BS 8888:2006 for use in further and higher education, the authors and contributing organizations accept no liability for any loss or damage caused, arising directly or indirectly, in connection with reliance on its contents except to the extent that such liability may not be excluded at law.

British Library Cataloguing in Publication Data
A catalogue record for this book is available from the British Library

ISBN 978-0-580-50868-4

Typeset in Frutiger by Helius, Brighton and Rochester
Printed in Great Britain by MPG Books, Bodmin, Cornwall

AVA Documents
Document Sharing Hub

Full document details: PP 8888-1:2007 Single Copy PDF

Contents

Foreword **xv**

Preface **xvii**

Scope **xix**

Using this Guide xix

1 Specifying technical products **1**

1.1 What is meant by 'technical product specification'? 1

1.2 Design brief 1

1.3 Function 1

1.4 Specifications 2

1.5 Intended users 2

1.6 Manufacturing considerations 2

2 Communicating product design **5**

2.1 Introduction 5

2.2 Sheet orientation 5

2.3 Title blocks 6

2.4 Layout of drawings 6

2.5 Borders and frames 7

2.6 Lines and line work 9

2.7 Types of line and their application 10

2.8 Coinciding lines 13

2.9 Lettering and numerals 14

2.10 Style 14

2.11 Location of notes 15

2.12 Scales and scale bars 15

3 Projection methods **19**

3.1 Introduction 19

3.2 General points 19

Documents
Document Sharing Hub

Full document details: PP 8888-1:2007 Single Copy PDF

3.3	Types of projection	19
3.4	Orthographic projection	21
3.5	Axonometric projection	28
3.6	Summary	34
4	**Presentation methods**	**37**
4.1	Introduction	37
4.2	General points	37
4.3	Types of view	37
4.4	Partial and auxiliary views	38
4.5	Partial views of symmetrical parts	40
4.6	Interrupted views	40
4.7	Representation of repetitive features	41
4.8	Sections and sectional views	42
4.9	Cutting planes	42
4.10	General points on hatching	43
4.11	Types of sectional view	45
4.12	Summary	50
5	**Representing standard components**	**53**
5.1	Introduction	53
5.2	What is meant by 'convention'?	53
5.3	Screw threads and threaded parts	53
5.4	Small diameter threads	55
5.5	Simplified representation of threaded parts	55
5.6	Dimensioning threaded parts	57
5.7	Representing springs	57
5.8	Representing gears	58
5.9	Representing bearings	61
5.10	Representing keys	61
5.11	Summary	62
6	**Dimensioning of technical drawings**	**65**
6.1	Introduction	65
6.2	General principles	65
6.3	Types of dimension	66
6.4	Dimensioning conventions	68
6.5	Arrangement of dimensions	70

Documents
Document Sharing Hub

Full document details: PP 8888-1:2007 Single Copy PDF

6.6 Examples of dimensioning methods 72
6.7 Methods for dimensioning common features 76
6.8 Dimensioning screw threads and threaded parts 80
6.9 Tolerancing 82
6.10 Summary 83

7 British, European and International Standards 85

8 Glossary 147

Index 151

Documents
Document Sharing Hub

Full document details: PP 8888-1:2007 Single Copy PDF

List of figures

Figure 1: Sheet orientation 5

Figure 2: Relationship of the 'A' sizes 7

Figure 3: Grid reference system and referencing marks 8

Figure 4: Types of drawing 8

Figure 5: Priority of coinciding lines 13

Figure 6: Application of the various types of line 14

Figure 7: Scale bar 16

Figure 8: Coordinate axes 20

Figure 9: Coordinate planes 21

Figure 10: Visual description of views 22

Figure 11: First angle projection 24

Figure 12: First angle projections 25

Figure 13: First angle projection symbol 25

Figure 14: Third angle projection 26

Figure 15: Third angle projections 27

Figure 16: Third angle projection symbol 27

Figure 17: Reference arrows layout 27

Figure 18: Hatching 29

Figure 19: Hatching 29

Figure 20: Isometric axonometry 30

Documents
Document Sharing Hub

Full document details: PP 8888-1:2007 Single Copy PDF

Figure 21: Cavalier axonometry 32

Figure 22: Cabinet axonometric representation of a cube with a circle in each face 32

Figure 23: Cabinet axonometric representation showing dimensions (normally omitted) 33

Figure 24: Normal and shortened planometric axonometry 33

Figure 25: Planometric axonometry 34

Figure 26: Partial view projected from an inclined feature 38

Figure 27: Enlarged partial view 39

Figure 28: Auxiliary view showing the true shape of the inclined surface 39

Figure 29: Symmetrical parts 40

Figure 30: Interrupted views 41

Figure 31: Representation of repetitive features 41

Figure 32: Positioning of repetitive features relative to single feature 42

Figure 33: Indication of a cutting plane 43

Figure 34: Hatching separated areas and adjacent parts 44

Figure 35: Hatching large areas 44

Figure 36: Section through thin material 45

Figure 37: Section in one plane 45

Figure 38: Sectional view in two parallel planes where the change in direction of the cutting plane occurs on a centre-line 46

Figure 39: Sectional view in three parallel planes where the change in direction of the cutting plane does not occur on a centre-line 46

Documents
Document Sharing Hub

Full document details: PP 8888-1:2007 Single Copy PDF

Figure 40: Sectional views in intersecting planes 47

Figure 41: A half-sectional view 47

Figure 42: Local or part-sectional view 48

Figure 43: Revolved sections 48

Figure 44: Removed sections 48

Figure 45: Successive sections 49

Figure 46: Conventions for parts not shown in longitudinal section 50

Figure 47: Conventions for showing screw threads and threaded parts 54

Figure 48: Conventions for thread run-outs and assembled threaded parts 55

Figure 49: Simplified representation of small threaded parts 55

Figure 50: Dimensioning threaded parts 57

Figure 51: Conventions for representing cylindrical helical springs 58

Figure 52: Conventional representation for gears 59

Figure 53: Examples of gears where one or two teeth can be shown 59

Figure 54: Conventions for gears in mesh 60

Figure 55: Conventional representation of roller bearings 61

Figure 56: Representing keys 61

Figure 57: Types of dimensioning 67

Figure 58: Examples of extension lines and dimension lines 68

Figure 59: Terminators for dimension lines 69

Documents
Document Sharing Hub

Full document details: PP 8888-1:2007 Single Copy PDF

Figure 60: Origin indication 69

Figure 61: Dimensioning interrupted features 69

Figure 62: Dimension lines on a partial view of a symmetrical part 69

Figure 63: Examples of the ways in which dimensions are typically used on drawings 70

Figure 64: Orientation of linear dimensions 71

Figure 65: Orientation of angular dimensions 71

Figure 66: Dimensioning smaller features 72

Figure 67: Larger dimensions placed outside smaller dimensions 72

Figure 68: Dimensions of diameters placed on view providing the greatest clarity 72

Figure 69: Parallel dimensioning 73

Figure 70: Examples of running dimensioning 73

Figure 71: Chain dimensioning 74

Figure 72: Examples of combined dimensioning 74

Figure 73: Dimensioning by coordinates (two directions) 75

Figure 74: Dimensioning by coordinates (tabulated) 75

Figure 75: Diameter dimensions indicated by leader lines 76

Figure 76: Dimensioning concentric diameters on partial views 77

Figure 77: Dimensioning a circle 77

Figure 78: Dimensioning spherical diameters 77

Figure 79: Dimensioning radii 78

Figure 80: Dimensioning holes 79

Documents
Document Sharing Hub

Full document details: PP 8888-1:2007 Single Copy PDF

Figure 81: Dimensioning chords, arcs and angles 79

Figure 82: Dimensions on a curved surface 80

Figure 83: Dimensioning external screw threads 81

Figure 84: Dimensioning internal screw threads 81

Figure 85: Linear dimension tolerance by specifying limits of size directly 82

Figure 86: Tolerancing angular dimensions 83

Documents
Document Sharing Hub
Full document details: PP 8888-1:2007 Single Copy PDF

List of tables

Table 1: Types of lines: BS ISO 128-24 11

Table 2: Description of views 22

Table 3: Screws and nuts 56

Documents
Document Sharing Hub

Full document details: PP 8888-1:2007 Single Copy PDF

Documents
Document Sharing Hub

Full document details: PP 8888-1:2007 Single Copy PDF

Foreword

The British Standards Institution (BSI) is the UK's National Standards Body responsible for preparing British Standards for product materials, systems and services. It presents the UK's view on standards in Europe and at an international level. BSI ensures that the interests of government, industry (including large and small businesses), professional associations, academia, societal groups and consumers are represented.

This Guide is one of a series of publications prepared by BSI Education to support the understanding and use of standards in secondary, further and higher education. It is a guide and should not be considered as a substitute for the full standard.

A full list of publications and online resources for teachers and students in schools and colleges can be found on the BSI Education website http://www.bsieducation.org.

Documents
Document Sharing Hub
Full document details: PP 8888-1:2007 Single Copy PDF

Documents
Document Sharing Hub

Full document details: PP 8888-1:2007 Single Copy PDF

Preface

Teachers may be familiar with the British Standard BS 308, which was the main reference guide for the production of technical drawings in a standard form, from its inception in 1927 to the withdrawal of most of its parts in 2000.

BS 8888:2000 (now superseded by the 2002, 2004 and 2006 editions) was introduced to transfer specification practices in use in the UK to the International Standards bases, [which are published by the International Organization for Standardization (ISO)]. This created a route map to the complex network of International Standards drafted to meet the demanding requirements of today's manufacturing technology and business practices and also established a unifying identity for the whole package of standards.

Following these developments, the scope of BS 8888 has been broadened. It now encompasses all other forms of technical product documents prepared as part of product specifications, regardless of the medium in which they are produced. BS 8888:2006 incorporates requirements and cross-references relating to electronic document management, 3D modelling and linear and geometric dimensioning, and tolerancing, in addition to the more traditional drawing indications and symbology. This expansion has been undertaken with the aim of creating an integrated system for product specifications.

The question could be asked 'Why produce drawings at all?', especially in this age of 3D modelling and computer-aided manufacture. The answer is simple: 'communication'. If a drawing does not communicate unambiguously it is virtually useless. Communication by drawing is still a prime method of conveying design intent that can be standardized internationally. Other methods, such as annotated 3D models, are evolving but in most cases will result in some form of drawing even if only for record purposes.

The primary driver for the development of BS 8888 has been the overarching requirement to provide a common language that will facilitate communication not only across national borders in support of today's global business model but also between disciplines. It is essential that designers, production engineers and metrologists can interact with precision and without ambiguity.

Documents
Document Sharing Hub

Full document details: PP 8888-1:2007 Single Copy PDF

Documents
Document Sharing Hub

Full document details: PP 8888-1:2007 Single Copy PDF

Scope

This Guide has been produced for teachers of Design and Technology at Key Stage 3 onwards and in Scotland is suitable for Graphic Communication and Product Design at Intermediate 2, Higher and Advanced Higher. It will also be a valuable resource for students studying Applied Engineering or Manufacturing at GCSE, GNVQ or Advanced VCE level. They will find it an essential reference guide when converting their design concepts into instructions for manufacturers.

It has been written to enable teachers and students to familiarize themselves with the British Standard for Technical Product Specifications (TPS), BS 8888:2006.

The aim of this Guide is to introduce students to the benefits of universally accepted ISO technical drawing practices utilizing the general principles and indications of dimensions and tolerances. It also introduces them to the benefits of using technical product documentation and specifications as specified in BS 8888:2006 when applied to current Design and Technology learning outcomes.

The Guide also emphasizes the links that exist between the process of quality management of products designed and manufactured in schools and colleges, and the process of good industrial practice where the design process is considered inseparable from verification (quality management). By raising students' awareness of these links, they will be better prepared to participate in the rapidly changing technologies of today's world.

Using this Guide

The layout of this Guide has been designed so that both student and teacher can access the relevant standard with relative ease. Sections have been included on all the main areas contained in current syllabi, such as orthographic layouts, dimensioning, sectioning, assembled views, exploded views and parts lists. All examples are taken from BS 8888:2006.

By ensuring that the presentation of their design concepts conforms to the current technical specification standards, students will become aware of the importance of

Documents
Document Sharing Hub
Full document details: PP 8888-1:2007 Single Copy PDF

effective communication between designers, manufacturers and those engaged in the final verification of manufactured output. By using the methods used in the 'real' world of industry and commerce they will, hopefully, find a greater relevance in the design work that they undertake.

It is important to recognize that although the contents of this Guide have been gathered from the most recent versions of the referenced standards available at the time of its publication, it is essential that students of design keep themselves up to date by ensuring that they are always referring to the most recent version of any standard referenced. Attention is drawn to one of the fundamental tenets of the TPS system, that the TPS at its acceptance date is definitive.

The main implication of this is that the acceptance date implicitly restricts the interpretation of the specification to those standards in force at the date of acceptance.

Attention is also drawn to the fact that whereas the implementation drawings have been taken directly from the standard, the accompanying text has been simplified in places to aid understanding. It therefore provides accurate information for students but should not replace the definitive standard.

Where applicable, a commentary on the chapter has been included. Teacher's notes are also included for information.

A list of applicable standards has been included at the end of each chapter.

In line with ISO convention, all figures are shown in first angle projection unless annotated with the third angle projection symbol.

Documents
Document Sharing Hub

Full document details: PP 8888-1:2007 Single Copy PDF

Specifying technical products 1

1.1 What is meant by 'technical product specification'?

BS 8888:2006 defines a technical product document as a 'means of conveying all or part of a design definition or specification of a product for manufacturing and verification purposes', i.e. drawings, lists and specifications. For this Guide, however, the definition of a technical product specification will be taken as 'a working drawing of the proposed design of the whole product'. It is important that this definition is set in context with other key sections of the Design and Technology student's design portfolio as considered in the following paragraphs.

1.2 Design brief

Before specifying a technical product, any requirements should be established together with the function the product is expected to perform. Any restrictions, such as budget constraints and the needs of the potential market, should also be considered in defining these requirements. This information is then encapsulated in the design brief statement. The statement should contain a clear description of the client's requirements for the product and should provide the first source of reference when evaluating the subsequent technical specification for the product.

1.3 Function

In the preparation of technical documents students should be aware that, as defined above, a technical document in industry is used as a means of verifying a product's fitness for purpose. It is therefore crucial that the purpose or function of the product is defined clearly in the brief and in detail in the subsequent specification. It is the designer's responsibility to specify, in the technical documentation produced, the verification criteria for the manufacturing requirements in the form of tolerances and other

Documents
Document Sharing Hub

Full document details: PP 8888-1:2007 Single Copy PDF

relevant specifications. These criteria can then be checked against the technical specification (whatever the final format) before manufacturing processes proceed.

1.4 Specifications

When a Design and Technology student produces a specification for a product, at least the following criteria should be addressed:

- unambiguous presentation/specification of size and form;
- consideration of material;
- consideration of the capability required to manufacture;
- consideration (if applicable) of the capability to assemble and/or disassemble;
- consideration of end of life disposal.

If these criteria have been taken into account, they should be evident in any final technical specification, and students should be aware of the ways in which manufacturing industry would present this specification using BS 8888:2006.

1.5 Intended users

Students should be aware that at the industrial level the end user may, or may not, be the client for whom the product is being produced. However, at all stages of design and manufacture, the needs of all users of the product need to be identified and met. At the technical product documentation stage (whether this is a drawing or a computer/physical model) this information should be expressed unambiguously, not just providing the intention of the design.

BS 8888:2006 provides the unified standards through which all of this information can be presented clearly.

1.6 Manufacturing considerations

Students are expected to show evidence of a consideration of manufacturing methods and processes throughout their design portfolios, not just in the specification as

Documents
Document Sharing Hub

Full document details: PP 8888-1:2007 Single Copy PDF

mentioned above. Drawings produced in accordance with BS 8888:2006 will show, in detail, dimensioning, tolerancing and surface texture information and, if applicable, other manufacturing details such as surface finish, i.e. plating or painting, fabrication, fastening and assembly. By using BS 8888:2006, students will not only familiarize themselves with industrial practice, but in so doing will set down information that will help them to make decisions about the capability to manufacture in quantity or job (one-off) production, the appropriate method of manufacture or the system for controlling production, etc.

The following chapters will set out those BS 8888:2006 standards that will be particularly relevant to the Design and Technology student.

Documents
Document Sharing Hub

Full document details: PP 8888-1:2007 Single Copy PDF

Documents
Document Sharing Hub

Full document details: PP 8888-1:2007 Single Copy PDF

Communicating product design

2

2.1 Introduction

This chapter gives a brief overview of the basic requirements for the standard set-up of a technical drawing. Students of Design and Technology will be required to demonstrate a variety of graphic techniques when presenting initial ideas. However, it should be noted that, for industrial purposes, working drawings (which in industry often form an integral part of the contract between designer, manufacturer and client) should follow current drawing standard requirements conforming to BS 8888:2006.

2.2 Sheet orientation

BS 8888:2006 states that drawing sheets and documents are to conform to either landscape or portrait sheet orientation as shown in Figure 1.

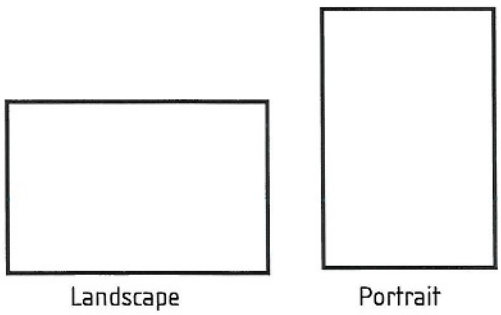

Figure 1: *Sheet orientation*

Documents
Document Sharing Hub

Full document details: PP 8888-1:2007 Single Copy PDF

Students will be familiar with this terminology from work done with computers but may be less familiar with the standardized drawing sheet sizes based on the 'A' series shown in Figure 2.

Students will most commonly work on A4 or A3 but should be aware that in industry the clarity of the information presented should be the key factor in choice of sheet size and scale.

2.3 Title blocks

Title blocks should be at the bottom of the sheet and should extend to the lower right-hand corner of the frame. Drawings should include the following information in the title blocks:

- name of legal owner;
- date of issue;
- projection symbol (can be positioned outside title block if required) (see Chapter 3);
- original scale;
- title;
- drawing number;
- sheet number;
- document type, i.e. detail or assembly;
- name of creator and approver.

2.4 Layout of drawings

The ISO 'A' series of drawing sheets shown in Figure 2 is normally used. The drawing area and title block should be within a frame border. In general, material within the frame border forms part of any contractual requirements.

Documents
Document Sharing Hub
Full document details: PP 8888-1:2007 Single Copy PDF

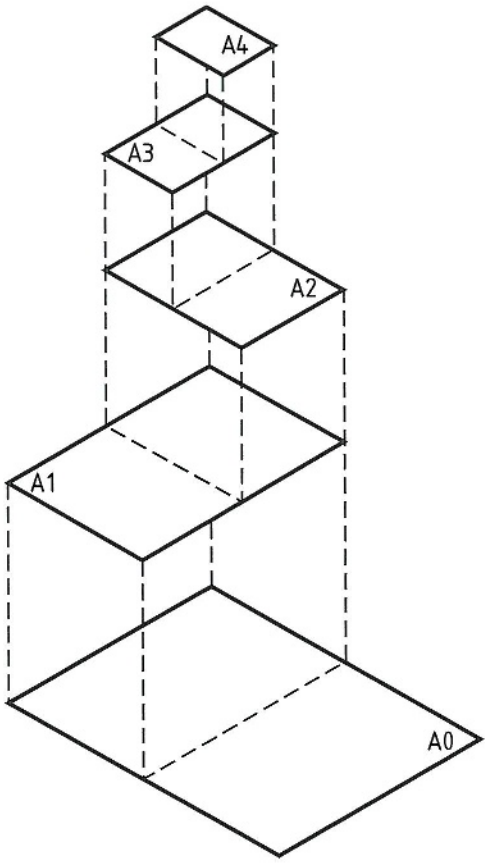

Figure 2: *Relationship of the 'A' sizes*

Key:
A4 = 210 mm × 297 mm
A3 = 297 mm × 420 mm
A2 = 420 mm × 594 mm
A1 = 594 mm × 841 mm
A0 = 841 mm × 1189 mm

Note. The sides of all sheets are in the ratio of 1:√2. A0 is nominally one square metre in area and forms the basis of the series.

2.5 Borders and frames

Borders enclosed by the edges of the trimmed sheet and the frame limiting the drawing space should be provided with all sizes. The border should be 20 mm wide on the left edge, including the width of the frame. It can be used as a filing margin. All other borders are 10 mm wide (see Figure 3; see Figure 4, for types of drawing).

AVA Documents
Document Sharing Hub

Full document details: PP 8888-1:2007 Single Copy PDF

Figure 3: *Grid reference system and referencing marks*

Key:
1 Trimming mark
2 Trimmed format
3 Grid reference
4 Frame of drawing space
5 Drawing space
6 Untrimmed format

Dimensions in millimetres

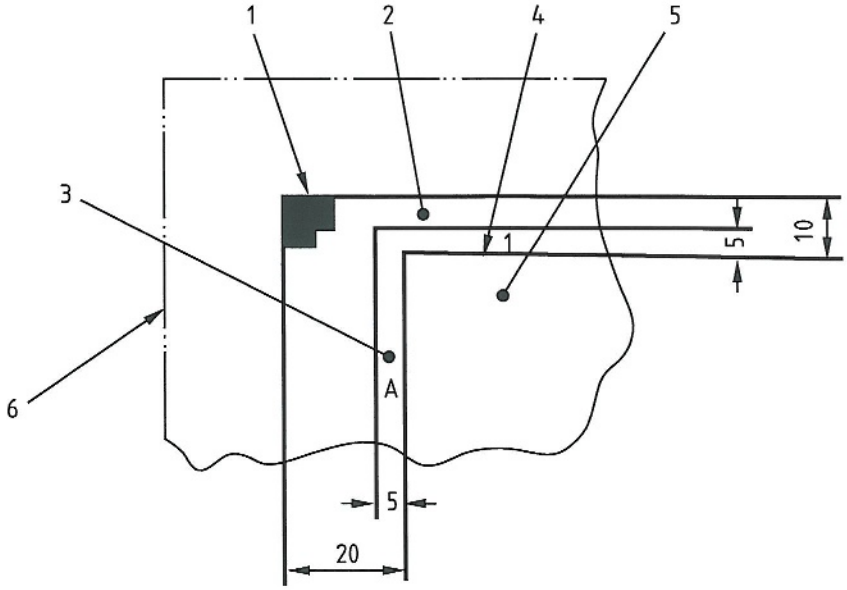

Figure 4: *Types of drawing*

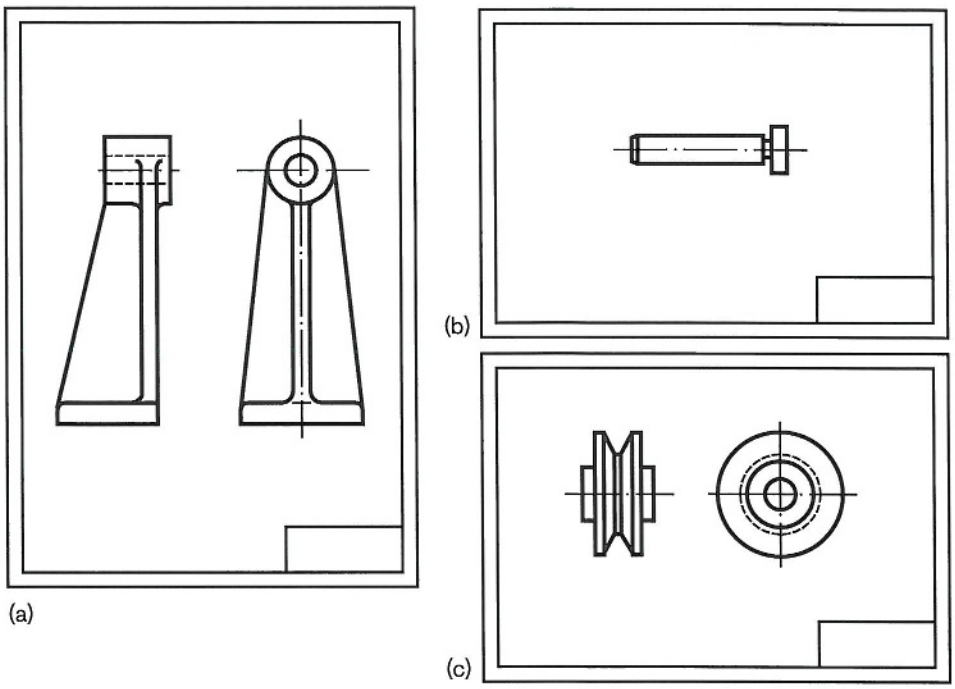

(a–c) *Detail (single part) drawings*

Documents
Document Sharing Hub
Full document details: PP 8888-1:2007 Single Copy PDF

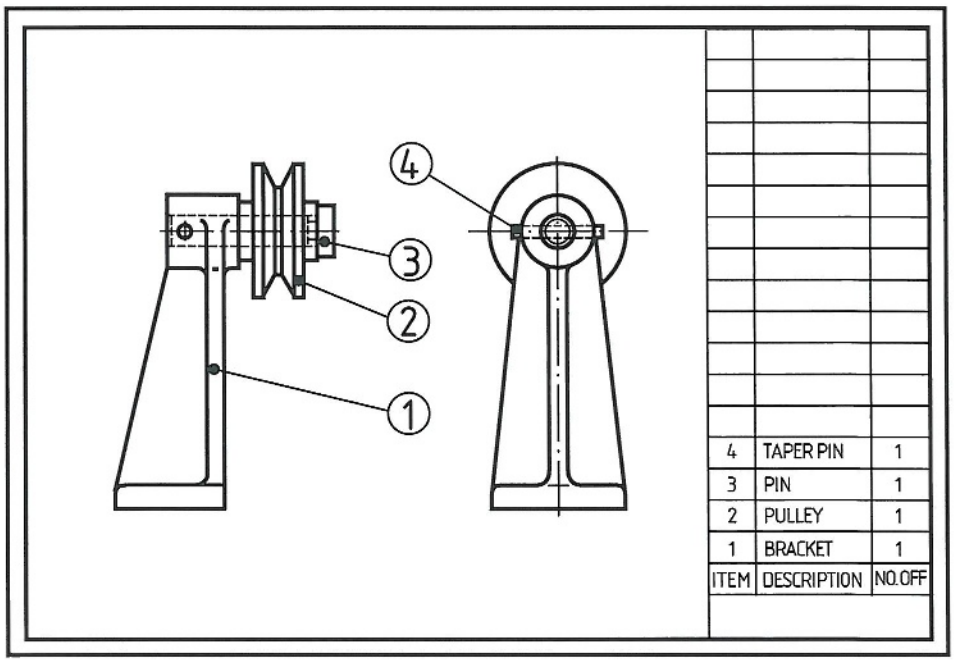

Figure 4: *Contd*

(d) *Assembly drawing*

Teacher's note: Design and Technology students should be aware that, for industrial purposes, additional information and referencing is included in the technical specification to make it easier to communicate the design information to the end user. For example:

- centring marks may be placed at opposite sides of the drawing to facilitate reproduction or microfilming; and
- a grid referencing system is used to divide the drawing space into fields in order to permit the easy location of details, additions, revisions, etc.

2.6 Lines and line work

Students, as designers, should use line work of the appropriate type, thickness and density on their working drawings. They should note that, in the production of technical drawings, the type and thickness of a drawn line conveys specific information to the reader of the drawing. It is therefore essential to ensure that the correct lines

Documents
Document Sharing Hub
Full document details: PP 8888-1:2007 Single Copy PDF

(according to the standards) are used. If this is not done, the drawing will lack clarity. This could result in the designer's intentions not being understood by the user.

Student should be aware of the complexity that exists in many industrial drawings and should therefore be able to select the appropriate line work for their needs from the full range of line work provided in the standards as shown in Table 1.

The width, '*d*', of all types of line should be one from the following series. The choice depends on the type and size of drawing. This series is based on a common ratio 1:√2 (≈ 1:1,41) as follows:

0,13 mm; 0,18 mm; 0,25 mm; 0,35 mm; 0,5 mm; 0,7 mm; 1 mm; 1,4 mm; 2 mm.

The widths of extra wide, wide and narrow lines are of the ratio 4:2:1. The line width should be constant along the whole line.

The minimum spacing between parallel lines should be not less than 0,7 mm, unless rules to the contrary are stated in other International Standards. In certain cases, when computer-aided drawing techniques are used, the spacing of lines on the drawing does not represent the actual spacing, e.g. for the representation of screw threads.

2.7 Types of line and their application

Types of line and their application are described in Table 1.

In dashed lines (type 02.1 and 02.2), the dashes should be of consistent length and spacing, approximately to the proportion shown in Table 1. Dashed lines should start and end with dashes in contact with the hidden or visible lines from which they originate, except when the hidden line continues a visible line. Dashed lines should also meet with dashes at tangent points and corners.

All long-dashed dotted and long-dashed double dotted lines (types 04.1, 04.2 and 05.1) should start and finish with a long dash.

Where centre-lines define centre points they should cross one another at long dash portions of the line.

Documents
Document Sharing Hub
Full document details: PP 8888-1:2007 Single Copy PDF

Centre-lines should extend only a short distance beyond the feature or view to which they apply. If required for dimensioning they should continue as extension lines. Common centre-lines should not extend across the space between adjacent views. Centre-lines should not stop at another line of the drawing. Where angles are formed in chain lines, long dashes should meet or cross at corners.

Table 1: *Types of lines: BS ISO 128-24*

Line	Description	Application
01.1	Continuous narrow line	.1 Imaginary lines of intersection .2 Dimension lines .3 Extension lines .4 Leader lines and reference lines .5 Hatching .6 Outlines of revolved sections in place .7 Short centre-lines .8 Root of screw threads .9 Origin and terminations of dimension lines .10 Diagonals for the indication of flat surfaces .11 Bending lines on blanks and processed parts .12 Framing of details .13 Indication of repetitive details .14 Interpretation lines of tapered features .15 Location of laminations .16 Projection lines .17 Grid lines
	Continuous narrow freehand line[a]	.18 Preferably manually represented termination of partial or interrupted views, cuts and sections, if the limit is not a line of symmetry or a centre-line
	Continuous narrow line with zigzags[a,b]	.19 Mechanically represented terminations of partial or interrupted views, cuts and sections, if the limit is not a line of symmetry or a centre-line

Documents
Document Sharing Hub
Full document details: PP 8888-1:2007 Single Copy PDF

Table 1: Contd

Line	Description	Application
01.2	Continuous wide line	.1 Visible edges .2 Visible outlines .3 Crests of screw threads .4 Limit of length of full-depth thread .5 Main representations on diagrams, maps, flowcharts .6 System lines (structural metal engineering) .7 Parting lines of mould in views .8 Lines of cuts and sections arrows
02.1	Dashed narrow line	.1 Hidden edges .2 Hidden outlines
02.2	Dashed wide line	.1 Indication of permissible areas of surface treatment, e.g. heat treatment
04.1	Long-dashed dotted narrow line	.1 Centre-lines .2 Lines of symmetry .3 Pitch circle of gears .4 Pitch circle of holes
04.2	Long-dashed dotted wide line	.1 Indication of lines or surfaces to which a special requirement applies .2 Position of cutting planes
05.1	Long-dashed double-dotted narrow line	.1 Outlines of adjacent parts .2 Extreme positions of movable parts .3 Centroidal lines .4 Initial outlines prior to forming .5 Parts situated at the front of the cutting plane .6 Outlines of alternative executions .7 Outlines of the finished part within blanks .8 Framing of particular fields/areas .9 Projected tolerance zone

[a] Although two alternatives are available, it is recommended that in any one drawing only one type of line is used.

[b] This type of line is situated for production of drawings by machines.

Documents
Document Sharing Hub
Full document details: PP 8888-1:2007 Single Copy PDF

2.8 Coinciding lines

When two or more lines of different types coincide, the following order of priority should be observed (see Figure 5):

- visible outlines and edges (continuous wide line, type 01.2.1 and 01.2.2);
- cutting planes (long-dashed dotted wide line, type 04.2.2);
- hidden outlines and edges (dashed narrow line, type 02.1.1 and 02.1.2);
- centre-lines and lines of symmetry (long-dashed dotted narrow line, type 04.1.2);
- centroidal lines (long-dashed double-dotted narrow line, type 05.1.3);
- projection lines (continuous narrow line, type 01.1.16).

Figures 5 and 6 show examples of the application of line types specified in BS ISO 128-24 as identified in BS 8888:2006.

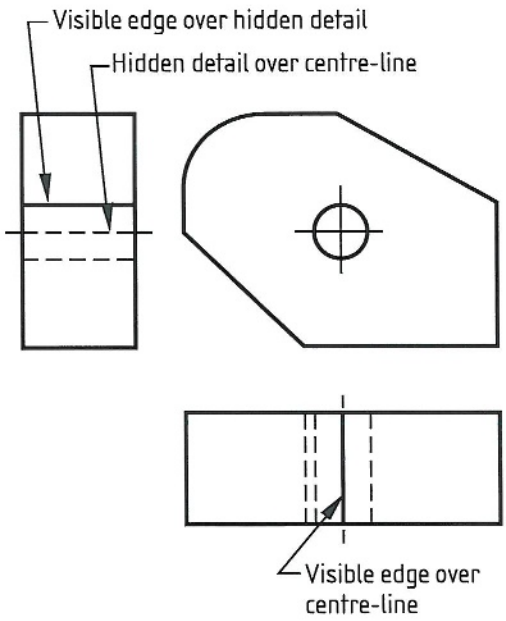

Figure 5: *Priority of coinciding lines*

Documents
Document Sharing Hub
Full document details: PP 8888-1:2007 Single Copy PDF

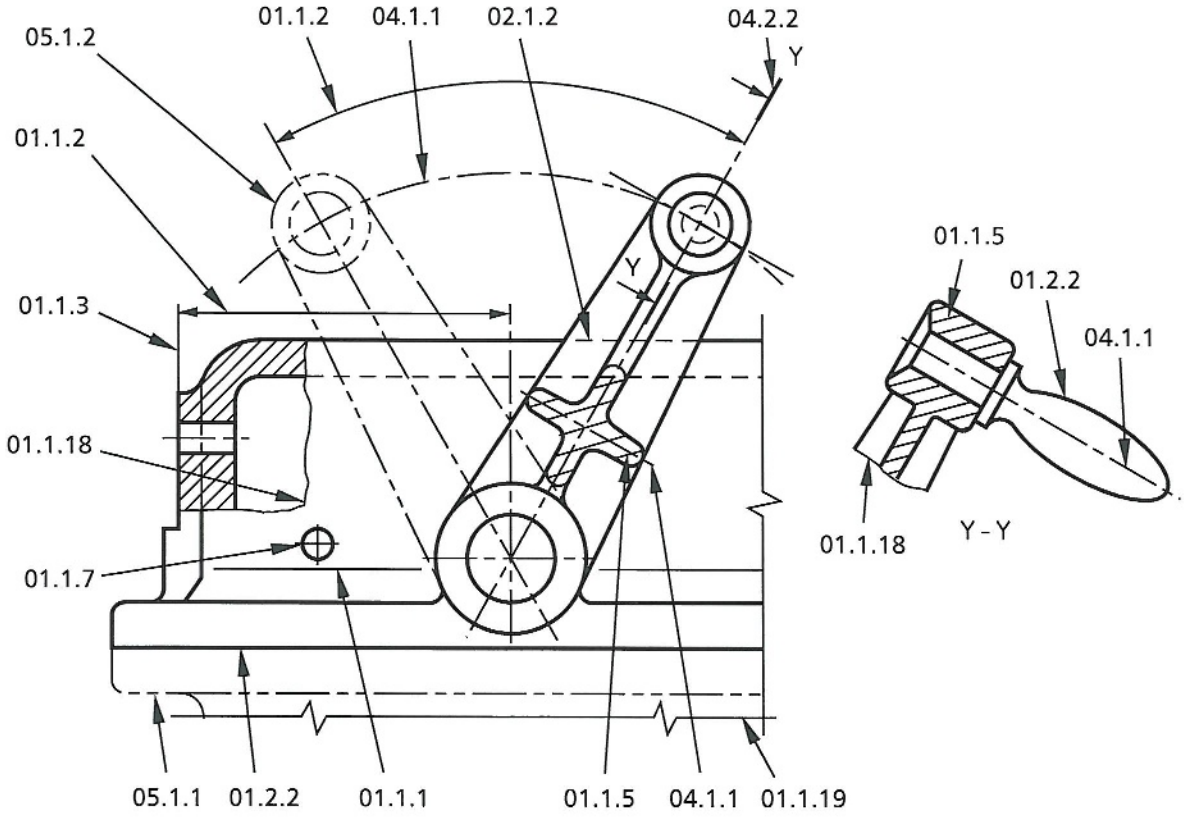

Figure 6: *Application of the various types of line*

2.9 Lettering and numerals

In any technical drawing the accuracy of the dimensioning is crucial to the communication of correct information to the end user. Clearly printed notes, labels, designation of views and sections, etc. are also essential if information is to be interpreted accurately. The clarity, style, spacing and size of lettering and numerals are important. Numerals should be drawn clearly as they often have to be read on their own. All strokes should be black and of uniform density.

2.10 Style

In general, vertical capital letters should be used. Some suggested examples of letters and numerals are shown below. See Chapter 7 for BS 8888 default and non-preferred styles.

Documents
Document Sharing Hub

Full document details: PP 8888-1:2007 Single Copy PDF

ABCDEFGHIJKLMNOPQRSTUVWXYZ
1234567890

ABCDEFGHIJKLMNOPQRSTUVWXYZ
1234567890

The dimensions and notes should generally be 3,5 mm high. Titles and drawing numbers are normally larger, typically 5 mm high. Where space is limited, i.e. on a drawing list or parts/item list, a text height of 2,5 mm can be used.

2.11 Location of notes

General notes should be grouped together and not be spread across the drawing. They should be positioned so that they can be read in the same direction as the information in the title block.

Notes referring to a special part may be positioned near the relevant feature but should not crowd the view.

Underlining is not recommended and LARGER CHARACTERS should be used to bring attention to a note or caption requiring special attention.

2.12 Scales and scale bars

Students should be aware that every technical drawing will need to be drawn in proportion, i.e. to a uniform scale. The scale should be stated in the title block as a ratio, e.g. 'ORIGINAL SCALE 1:2'. The words 'half size', 'full size', etc. should not be used.

The BS 8888:2006 recommended scale for full size is 1:1.

Reduction scales (on drawings less than full size) are recommended as 1:2, 1:5, 1:10, 1:20, 1:50, 1:100, 1:200, 1:500 and 1:1000, 1:2000, 1:5000, 1:10000.

Enlargement scales (on drawings larger than full size) are recommended as 2:1, 5:1, 10:1, 20:1 and 50:1.

Documents
Document Sharing Hub

Full document details: PP 8888-1:2007 Single Copy PDF

Scales will be chosen according to the size of the object to be drawn. The key criteria should be to clearly communicate all necessary information to the end user.

A scale bar (or any metric reference graduation) should be figure-less, have a minimum length of 100 mm and be graduated at 10 mm intervals: see Figure 7. It should be placed symmetrically about a centring mark, near the frame and within the border of the drawing. It should have a maximum width of 5 mm.

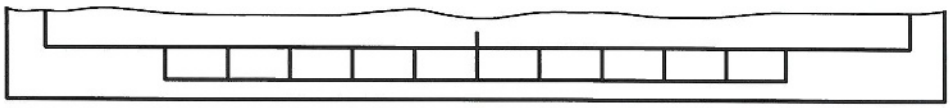

Figure 7: *Scale bar*

Relevant standards	Title
BS EN ISO 128-20	*Technical drawings — General principles of presentation — Part 20: Basic conventions for lines*
BS EN ISO 128-21	*Technical drawings — General principles of presentation — Part 21: Preparation of lines by CAD systems*
BS ISO 128-22	*Technical drawings — General principles of presentation — Part 22: Basic conventions and applications for leader lines and reference lines*
BS ISO 128-23	*Technical drawings — General principles of presentation — Part 23: Lines on construction drawings*
BS ISO 128-24	*Technical drawings — General principles of presentation — Part 24: Lines on mechanical engineering drawings*
BS ISO 128-25	*Technical drawings — General principles of presentation — Part 25: Lines on shipbuilding drawings*
BS ISO 129-1	*Technical drawings — Indication of dimensions and tolerances — General principles*

Documents
Document Sharing Hub
Full document details: PP 8888-1:2007 Single Copy PDF

BS EN ISO 3098-0	*Technical product documentation — Lettering — Part 0: General requirements*
BS EN ISO 3098-2:2000	*Technical product documentation — Lettering — Part 2: Latin alphabet, numerals and marks*
BS EN ISO 3098-3:2000	*Technical product documentation — Lettering — Part 3: Greek alphabet*
BS EN ISO 3098-4:2000	*Technical product documentation — Lettering — Part 4: Diacritical and particular marks for the Latin alphabet*
BS EN ISO 3098-5:1998	*Technical product documentation — Lettering — Part 5: CAD lettering of the Latin alphabet, numerals and marks*
BS EN ISO 3098-6:2000	*Technical product documentation — Lettering — Part 6: Cyrillic alphabet*
BS EN ISO 5455	*Technical drawings — Scales*
BS EN ISO 5457	*Technical product documentation — Sizes and layout of drawing sheets*
BS EN ISO 7200	*Technical product documentation — Data fields in title blocks and document headers*
BS ISO 7573	*Technical drawings — Item lists*
BS ISO 10209-1	*Technical product documentation — Vocabulary — Part 1: Terms relating to technical drawings: general and types of drawings*

Documents
Document Sharing Hub

Full document details: PP 8888-1:2007 Single Copy PDF

Documents
Document Sharing Hub

Full document details: PP 8888-1:2007 Single Copy PDF

Projection methods 3

3.1 Introduction

In industry, a technical specification passed between the designer, manufacturer and client consists of a variety of projection methods. In schools and colleges, students of Design and Technology are also required to use a variety of graphic styles and, where appropriate, projection methods to communicate their design ideas.

This chapter describes the principles of these methods as set out in the relevant standards and suggests the merits and disadvantages of the different systems.

3.2 General points

The increase in global telecommunications, as well as the evolution of methods of computer-aided design (CAD) and draughting, have led to the full use of orthographic projection methods and an increase in axonometric projections either to complement the traditional orthographic views or to replace them altogether. There is now, more than ever, a need to be clear about which methods and standards are being used. At all times the general principle remains that of communicating the information to the end user in as clear and unambiguous a way as possible.

3.3 Types of projection

3.3.1 General

BS 8888:2006 identifies three methods of projection, two of which are particularly relevant to schools and colleges.

AVA Documents
Document Sharing Hub

Full document details: PP 8888-1:2007 Single Copy PDF

1. **Orthographic projection**: this includes the two types of orthographic projection currently in use: first angle orthographic projection and third angle orthographic projection. Reference arrows are also used.
2. **Axonometric projection**: this includes the more commonly used methods of pictorial presentation in technical drawings, such as oblique axonometry, isometric axonometry and planometric axonometry.

Note. Both the above methods are orthogonal systems. This means that the projectors are infinite and lie at right angles to the projection plane.

The third 'central projection' method is primarily used for architectural drawing and illustrating purposes.

3.3.2 Terminology

The following terms are useful when considering projections.

Geometric orientation: describing an object's position in space using coordinate axes and planes.

Coordinate axes: imaginary lines in space that intersect at right angles to each other at the origin. The three coordinates are designated by the capital letters X, Y and Z as shown in Figure 8.

Figure 8: *Coordinate axes*

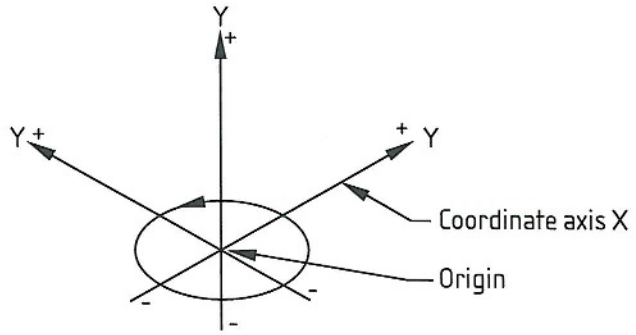

Coordinate planes: imaginary planes in space that intersect each other at right angles. Each of the three coordinate planes is defined by the axes and includes the origin. They are designated by the capital letters XY, YZ and XZ as shown in Figure 9.

Documents
Document Sharing Hub
Full document details: PP 8888-1:2007 Single Copy PDF

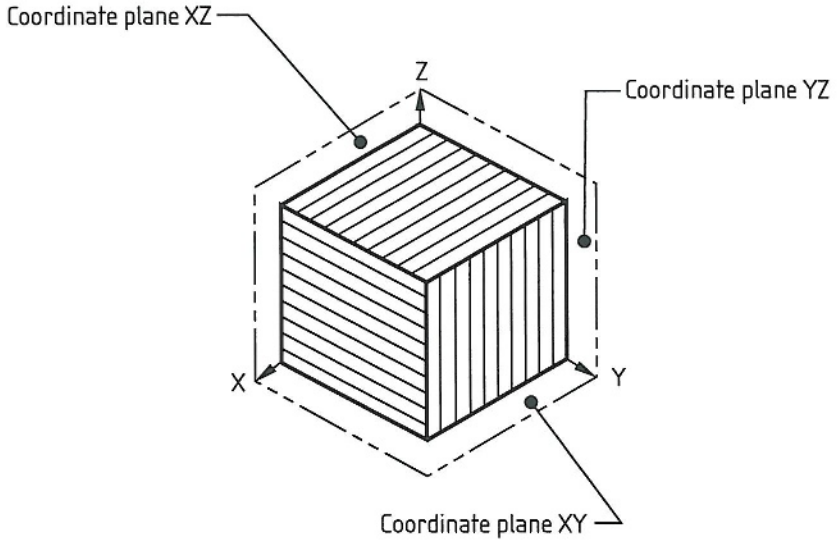

Figure 9: *Coordinate planes*

3.3.3 Invariables (true lengths and shapes)

Lines and features of an object that are depicted in the projection as a true view are an important feature of projection methods. The reader of a technical drawing that uses orthogonal and/or axonometric methods of projection must take this into consideration, especially when interpreting information directly from the drawing. Surfaces and lines will only appear on the drawing as true shapes and lengths when they are positioned at right angles to the projectors and parallel to the plane of projection.

3.4 Orthographic projection

3.4.1 Introduction

Some students of Design and Technology may not be required to understand all the basic principles underpinning orthographic projection. However, teachers should have a good working knowledge of these principles.

'Orthographic representation in its various forms is the most widely used method of representing technical objects in all fields of technical drawing…and is thus considered to be the accepted technical language' (BS EN ISO 5456-2:1999).

Documents
Document Sharing Hub

Full document details: PP 8888-1:2007 Single Copy PDF

Teacher's note: for the purposes of this Guide, the main principles as described in BS EN ISO 5456-2:1999 (as recommended in BS 8888:2006) are summarized. Teachers can then decide on the appropriate level of detail required to introduce the topic to students.

3.4.2 General principles of orthographic representation

Orthographic representation is obtained by means of parallel orthogonal (at right angles) projections and results in flat, two-dimensional views systematically positioned relative to each other. To show an object completely, the six views in the directions a, b, c, d, e and f may be necessary (see Figure 10 and Table 2).

Figure 10: *Visual description of views*

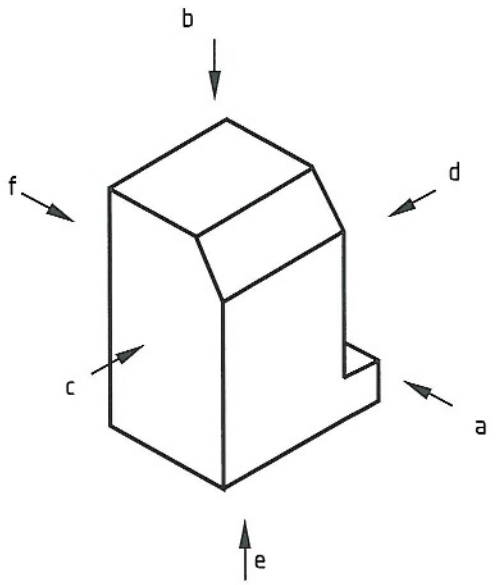

Table 2: *Description of views*

Direction of observation		
View in direction	**View from**	**Designation of view**
a	the front	A
b	above	B
c	the left	C
d	the right	D
e	below	E
f	the rear	F

Documents
Document Sharing Hub
Full document details: PP 8888-1:2007 Single Copy PDF

Care should be taken in choosing a principal view, as confusion and ambiguity may arise out of the terms 'front', 'side' and 'end' used to describe the views.

The standards recommend that the principal view be called 'the front view'. This is taken to be the most informative view of the object to be represented. This is view 'A' according to the direction of viewing 'a' (see Table 2 and Figure 10). It should generally show the object in the functioning, manufacturing or mounting position.

Teacher's note: this point should be used to emphasize the relationship between the drawing and the end user.

The position of other views relative to the principal view in the drawing depends on the projection method chosen, e.g. first angle, third angle or reference arrows. In practice, not all six views (A to F) are needed. When views (or cuts or sections) other than the principal view are necessary, these shall be selected accordingly in order to:

- limit the number of views, cuts and sections to the minimum necessary but sufficient to fully represent the object without ambiguity; and
- avoid unnecessary repetition of detail.

3.4.3 Methods of orthographic representation

The descriptions for first and third angle orthographic projection are taken directly from the standards and on first reading may appear overly technical. However, it should be pointed out that the language used in the standards needs to be precise to avoid the risk of ambiguity. Teachers may prefer to illustrate the principles described by using a three-dimensional model (based on Figure 11) and will, for clarity, be likely to restrict the views depicted to three. Interestingly, the difficulties of describing visual information precisely underpin the need for the 'visual language' of technical drawings.

3.4.4 First angle projection

The first angle projection method is an orthographic representation in which the object to be represented (Figure 10) appears between the observer and the coordinate planes on which the object is orthogonally (at right angles to) projected (see Figure 11).

Documents
Document Sharing Hub

Full document details: PP 8888-1:2007 Single Copy PDF

The position of the various views relative to the principal (front) view 'A' are determined by rotating their projection planes around lines coinciding with, or parallel to, the coordinate axes on the coordinate plane (drawing surface) on which the front view 'A' is projected (see Figure 11).

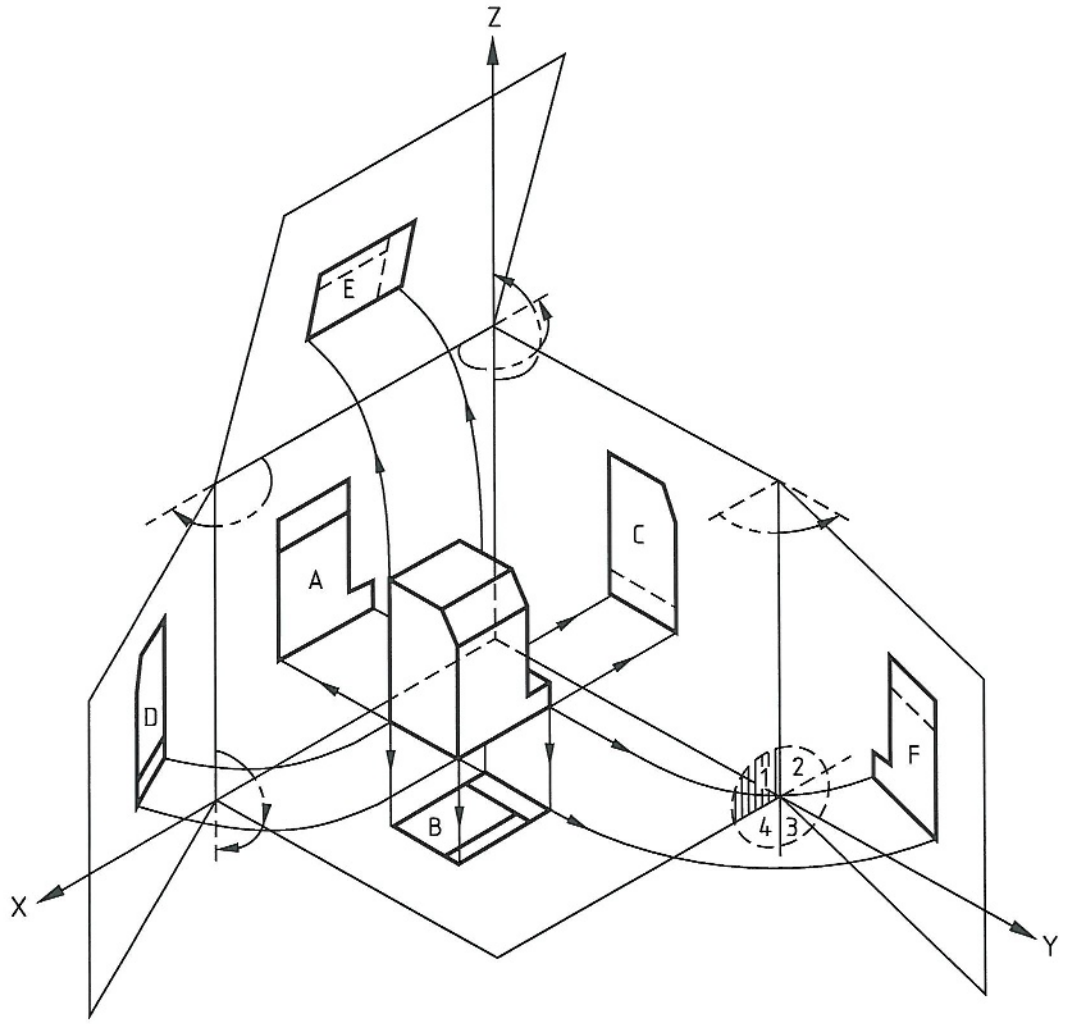

Figure 11: *First angle projection*

Considering all five other views with reference to Figure 11, the views as shown in Figure 12 are arranged as follows:

Documents
Document Sharing Hub
Full document details: PP 8888-1:2007 Single Copy PDF

1. View B: the view from above is placed underneath;
2. View C: the view from the left is placed on the right;
3. View D: the view from the right is placed on the left;
4. View E: the view from below is placed above;
5. View F: the view from the rear is placed on the right or on the left, as convenient.

Figure 13 shows the symbol used to indicate a drawing is in first angle. It consists of front and end views of a right truncated cone.

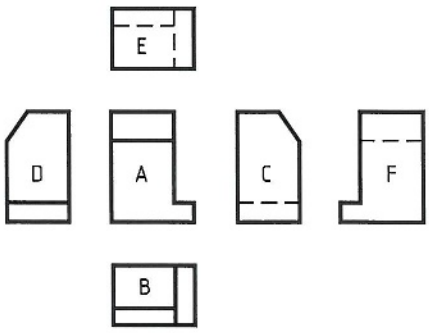

Figure 12: *First angle projections*

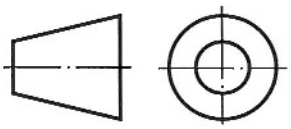

Figure 13: *First angle projection symbol*

3.4.5 Third angle projection

The third angle projection method is an orthographic representation in which the object to be represented (Figure 10) as seen by the observer appears behind the coordinate planes on which the object is orthogonally projected (see Figure 14). On each projection plane, the object is represented as if seen orthogonally from an infinite distance, with transparent projection planes.

The position of the various views relative to the principal (front) view 'A' are determined by rotating their projection planes around lines coinciding with, or parallel to, the coordinate axes on the coordinate plane (drawing surface) on which the front view 'A' is projected (see Figure 14).

Documents
Document Sharing Hub

Full document details: PP 8888-1:2007 Single Copy PDF

Figure 14: Third angle projection

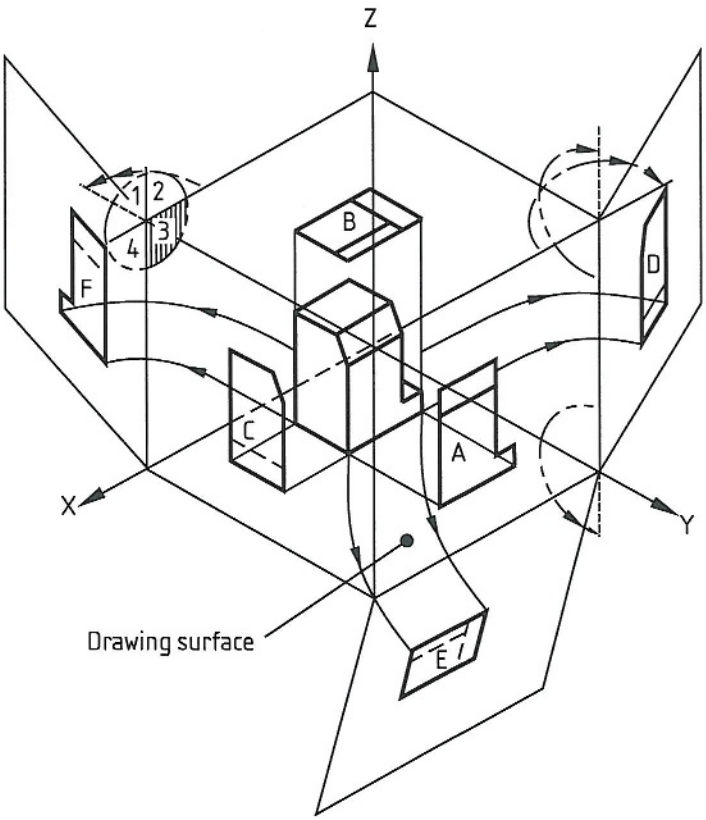

Teacher's note: once again the precise text in the standards is given for purposes of technical authenticity. Reference to models and simplified versions of Figure 14 may be useful for clarity for students.

Therefore, in Figure 15, with reference to view A (see Figure 14), the other views are as follows:

1. View B: the view from above is placed above;
2. View C: the view from the left is placed on the left;
3. View D: the view from the right is placed on the right;
4. View E: the view from below is placed underneath;
5. View F: the view from the rear may be placed on the left or on the right, as convenient.

Figure 16 shows the standard symbol for indicating third angle projection. It consists of front and end views of a right truncated cone.

Documents
Document Sharing Hub
Full document details: PP 8888-1:2007 Single Copy PDF

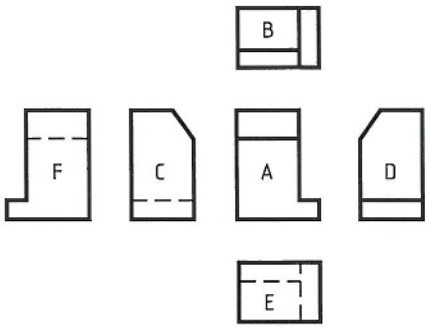

Figure 15: *Third angle projections*

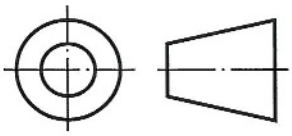

Figure 16: *Third angle projection symbol*

3.4.6 Reference arrows layout

The standards stipulate the following with reference to additional views that are not in the strict pattern of first or third angle. These views are usually indicated with reference arrows.

With the exception of the principal view, each view will be identified by a letter, in accordance with Figure 10. A lower case letter indicates, in the principal view, the direction of observation of the other views, which are identified by the corresponding capital letter placed immediately above the view and on the left.

The identified views may be located irrespective of the principal view (see Figure 17). Whatever the direction of observation, the capital letters identifying the views shall always be positioned to be read from the normal direction of viewing of the drawing.

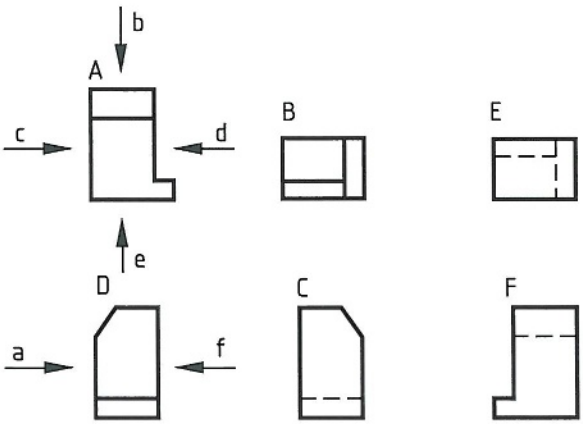

Figure 17: *Reference arrows layout*

Documents
Document Sharing Hub

Full document details: PP 8888-1:2007 Single Copy PDF

3.5 Axonometric projection

3.5.1 Methods of axonometric representation

BS EN ISO 5456-3, *Technical drawings — Projection methods — Part 3: Axonometric representations* describes axonometric representations as 'simple pictorial representations obtained by projecting the object to be represented from an infinitely distant point (projection centre) onto a single projection plane (normally the drawing surface). This kind of parallel projection gives an adequate approximation for distant views. The resulting representation depends on the shape of the object and on the relative positions of the projection centre, the projection plane and the object itself.

Among the infinite possibilities of axonometric representation, only a few types are recommended for technical drawings in all fields of technical activities (e.g. mechanical, electrical, construction, etc.)'.

Traditionally, axonometric representations have not been commonly used in technical drawings as orthographic representations were easier to produce and more commonly used. However, with the increasing use of 3D CAD packages, this may not be the case in the future.

Teacher's note: the above description is quoted from the standard BS EN ISO 5456-3 to clarify 'axonometric' in terms of it being the generic phrase for the following types of recommended axonometry: isometric, dimetric and oblique (which consists of cabinet, cavalier and planometric representation). This Guide considers isometric and oblique representation.

The following general points concerning axonometric representation apply.

- Hidden detail is not normally shown on axonometric drawings.
- Hatching lines to indicate a cut or section are drawn at 45° to the axes and contours of the cut section (see Figure 18).
- Hatching lines to indicate planes parallel to the coordinate planes are drawn parallel to the projected coordinate axis, as shown in Figure 19.

Note. Hatching should only be used if there is ambiguity in the projection.

Documents
Document Sharing Hub

Full document details: PP 8888-1:2007 Single Copy PDF

- Dimensioning of axonometric representations is normally avoided. If it is applied then the same rules are followed as for orthographic projections (see Figure 20d).

  Note. With the increase in 3D CAD use, axonometric representations that are suitable for dimensioning are becoming easier to produce. See BS ISO 16792 (which is due for publication in September 2007) for further information.

- The most informative view of the object to be represented is normally chosen as the principal view (front view). This is view A (see Figure 14), generally showing the object in the functioning or manufacturing or mounting position. The position of other views relative to the principal view in the drawing depends on the projection method chosen (first angle, third angle, reference arrows). In practice, not all six views (A to F) are needed. When views (or cuts or sections) other than the principal view are necessary, these shall be selected in order to:
  - limit the number of views, cuts and sections to the minimum necessary but sufficient to fully represent the object without ambiguity; and
  - avoid unnecessary repetition of detail.

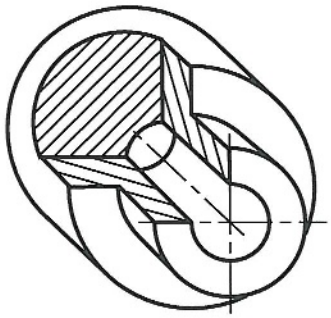

Figure 18: *Hatching*

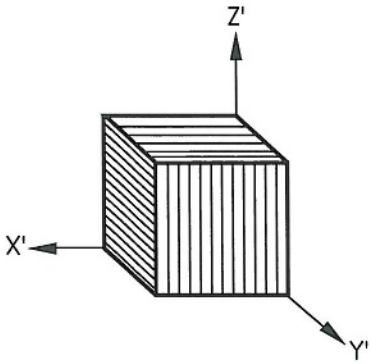

Figure 19: *Hatching*

Documents
Document Sharing Hub

Full document details: PP 8888-1:2007 Single Copy PDF

3.5.2 Isometric axonometry

BS EN ISO 5456-3 describes isometric axonometry as: 'the orthogonal axonometry in which the projection plane forms three equal angles with the three coordinate axes X, Y and Z' (see Figure 20a).

The fact that this is an orthogonal projection as opposed to a convergent one, such as perspective drawing, means that the representation is somewhat visually distorted. The reader requiring a technical explanation as to why this is so should refer to BS EN ISO 5456-3.

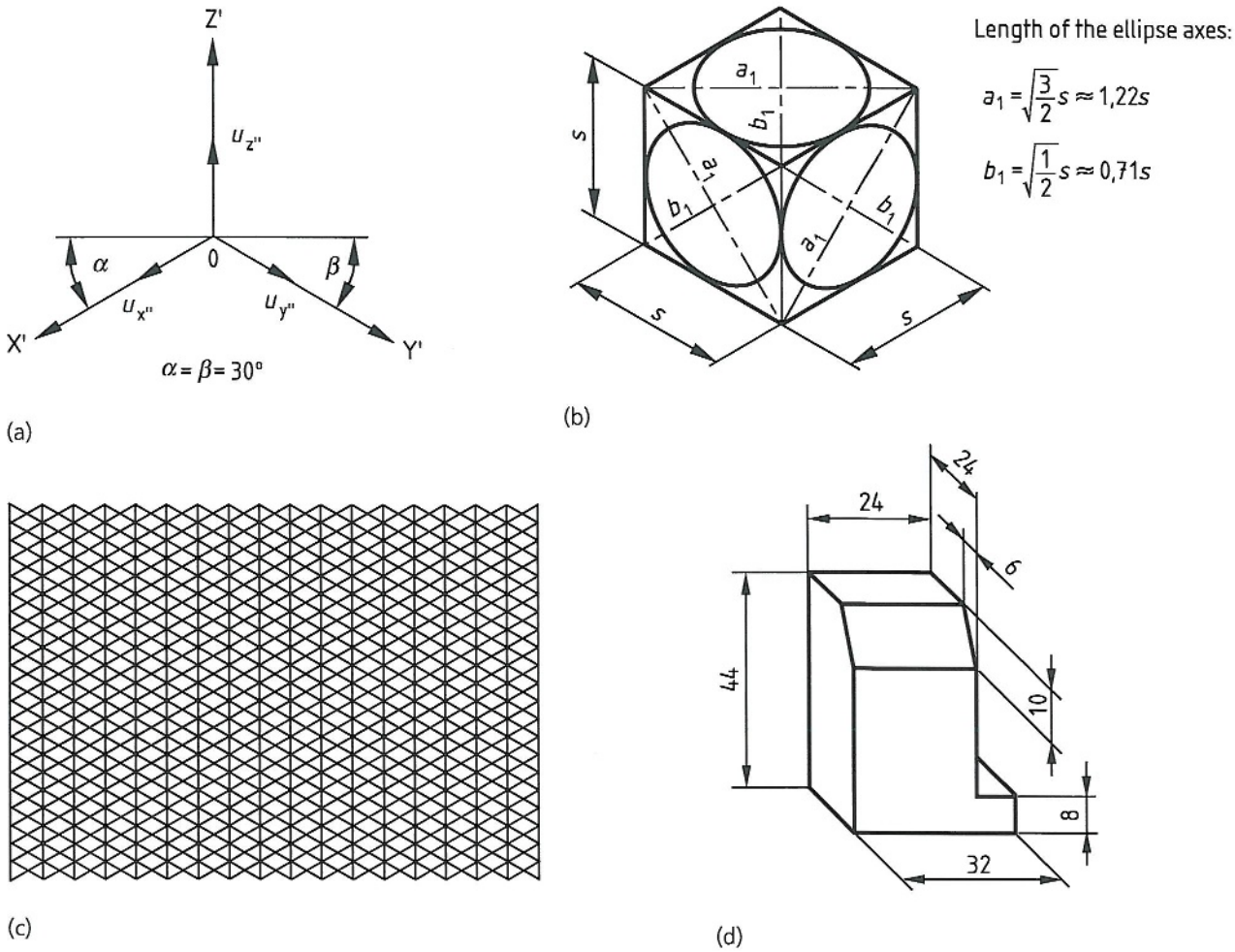

Figure 20: *Isometric axonometry*

Documents
Document Sharing Hub
Full document details: PP 8888-1:2007 Single Copy PDF