PSA PEUGEOT - CITROËN

TERMINOLOGIE TECHNIQUE

A22 1462

STRUCTURE CAISSE
COTE CAISSE - DOUBLURE AILE AR
CUSTODE - PASSAGE ROUE - 3EME PARTIE

SANS RESTRICTION D'UTILISATION

Usage Public
Documents
Document Sharing Hub

Full document details: PSA A22 1461 1992

DOUBLURE AILE AR-CUSTODE-PASSAGE ROUE	2K4F	A22 1462	2/10

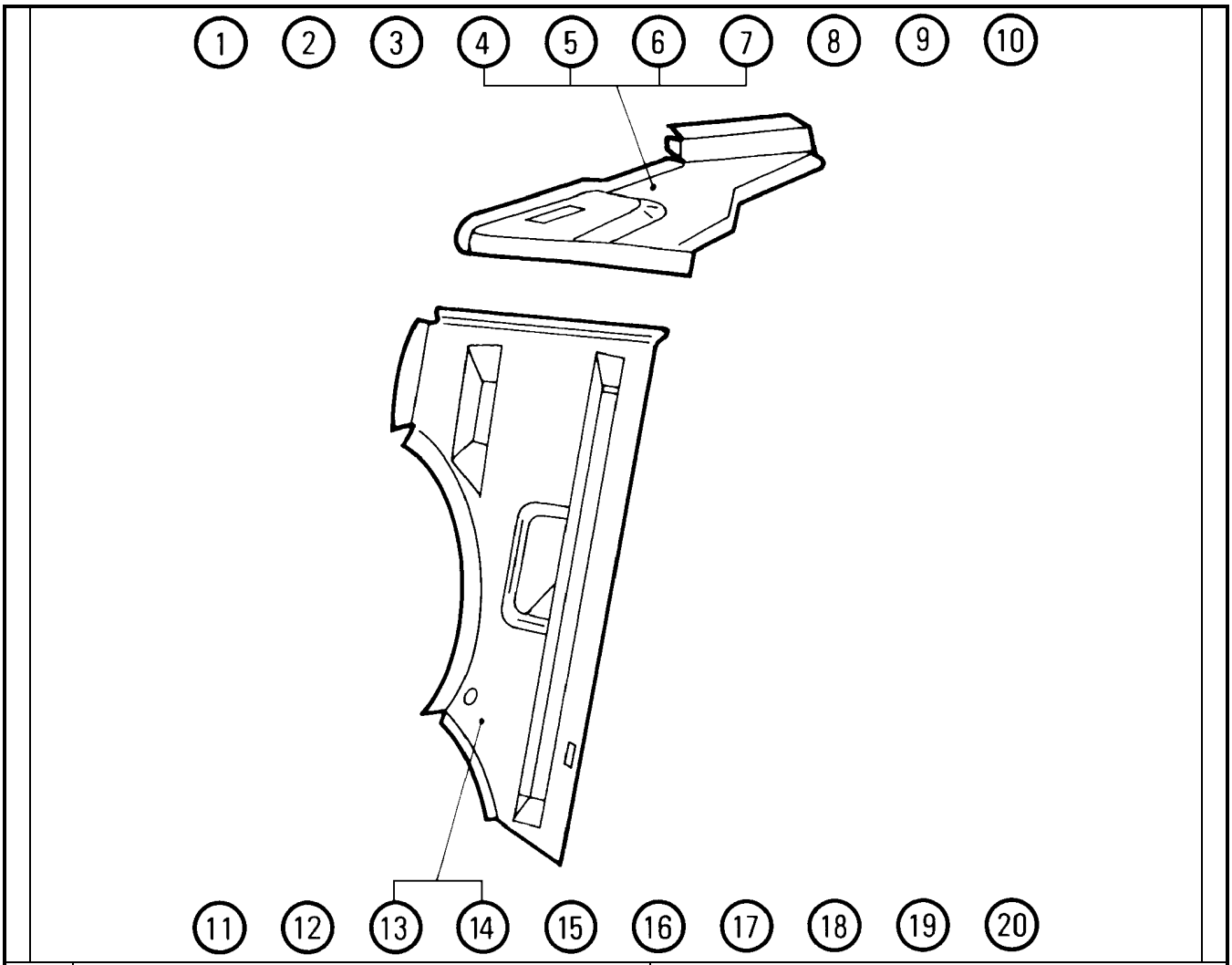

Rep	DESIGNATION FRANCAIS	
1		
2		
3		
4	TABLETTE LAT AR D ASS	
5	TABLETTE LAT AR G ASS	
6	TABLETTE LAT AR D	
7	TABLETTE LAT AR G	
8		
9		
10		
11		
12		
13	APPUI DOSSIER AR D	
14	APPUI DOSSIER AR G	
15		
16		
17		
18		
19		
20		

Documents
Usage Public
Document Sharing Hub

Full document details: PSA A22 1461 1992

DOUBLURE AILE AR-CUSTODE-PASSAGE ROUE	2K4F	A22 1462	3/10

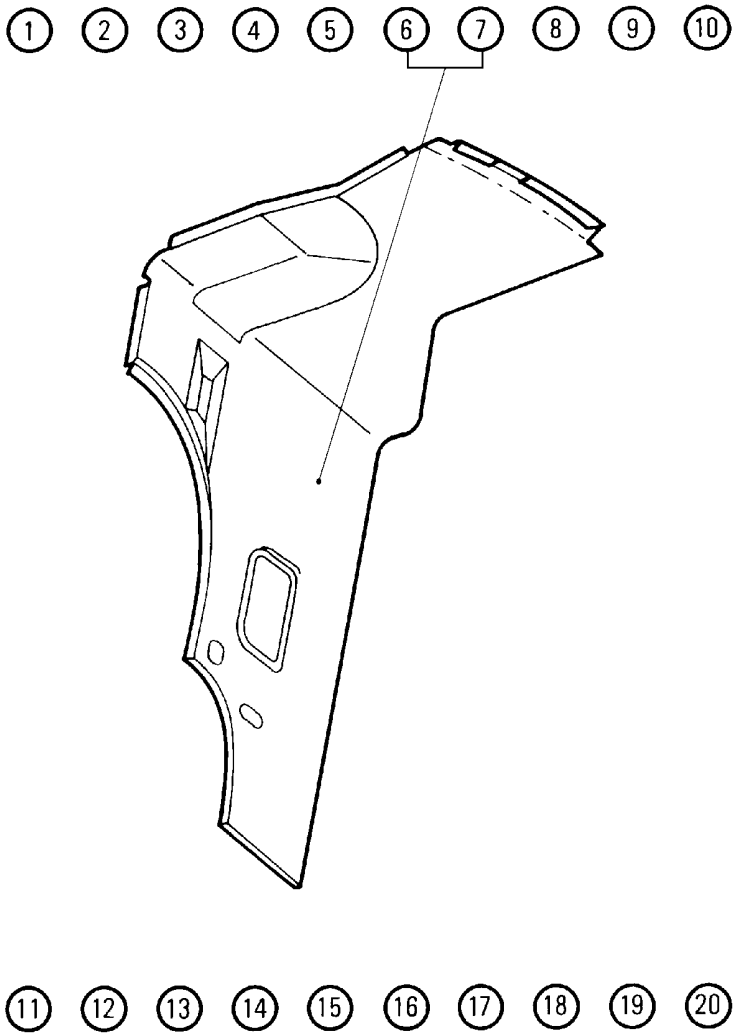

Rep	DESIGNATION FRANCAIS	
1		
2		
3		
4		
5		
6	TABLETTE LAT APPUI DOSSIER AR D	
7	TABLETTE LAT APPUI DOSSIER AR G	
8		
9		
10		
11		
12		
13		
14		
15		
16		
17		
18		
19		
20		

Documents
Usage Public
Document Sharing Hub

Full document details: PSA A22 1461 1992