PSA PEUGEOT - CITROËN

TERMINOLOGIE TECHNIQUE

A23 2510

EQUIPEMENT CARROSSERIE EQUIPEMENTS EXT EQUIPEMENT EXTERIEUR ACCESSOIRES RETROVISEUR EXT PASSAGER

SANS RESTRICTION D'UTILISATION

www.sepana.ir

Usage Public

Documents
Document Sharing Hub

Full document details: PSA A23 2510 1998

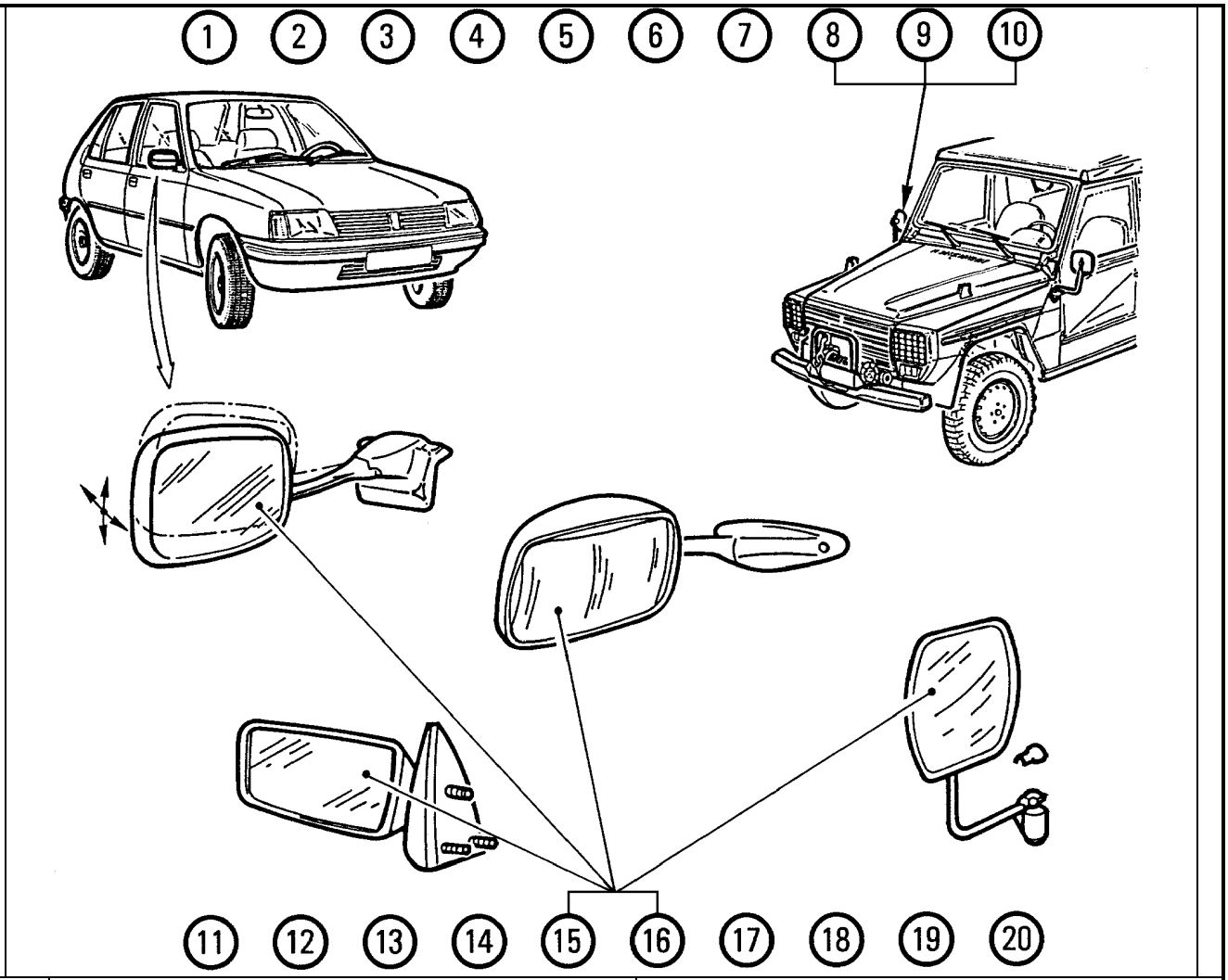

Rep	DESIGNATION FRANCAIS	
1		
2		
3		
4		
5		
6		
7		
8	RETRO MANUEL DAG DAD	
9	RETRO D MANUEL DAG DAD	
10	RETRO G MANUEL DAG DAD	
11		
12		
13		
14		
15	RETRO D MANUEL DAG	
16	RETRO G MANUEL DAD	
17		
18		
19		
20		

www.sepana.ir

Documents
Usage Public
Document Sharing Hub

Full document details: PSA A23 2510 1998

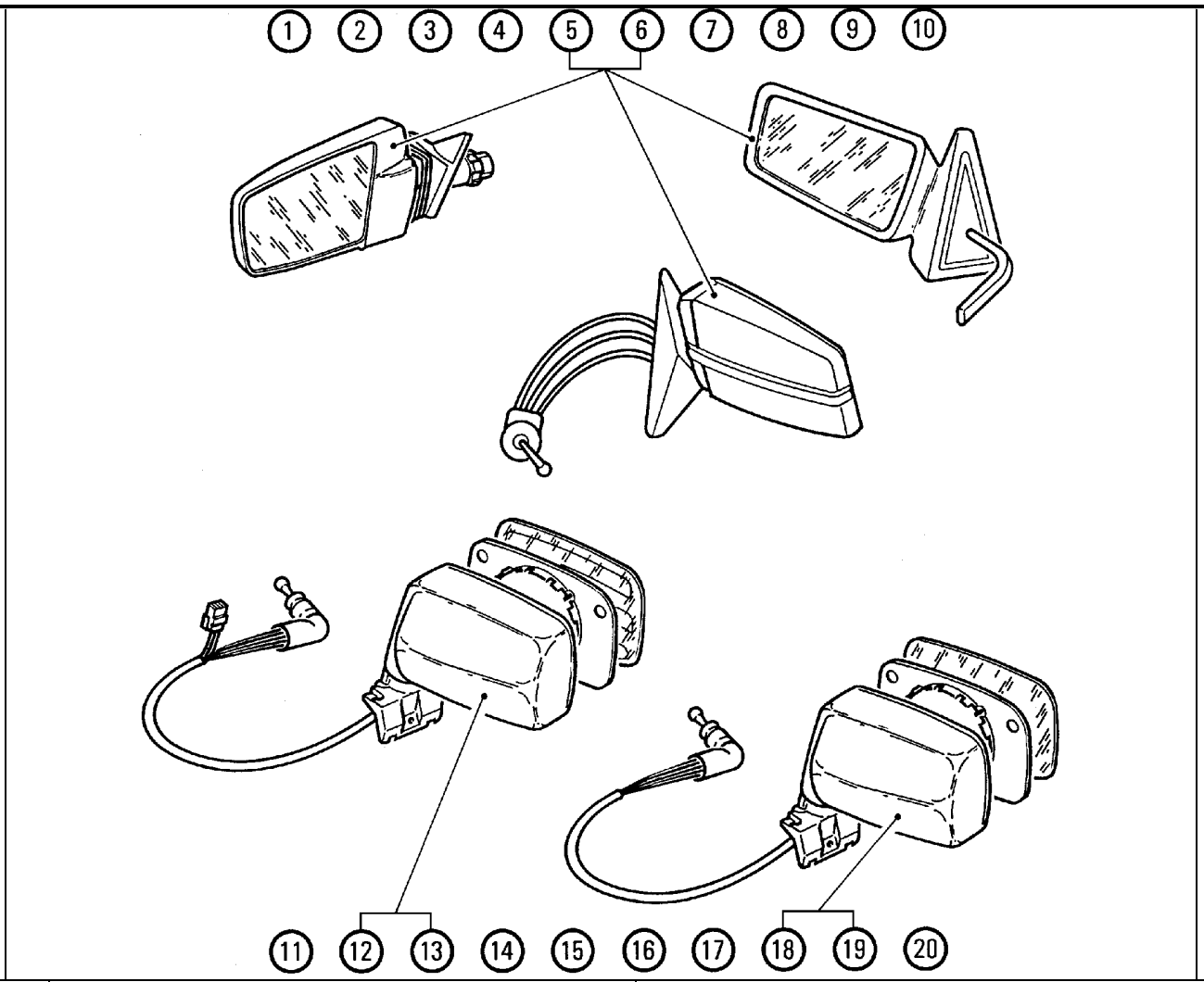

Rep	DESIGNATION FRANCAIS	
1		
2		
3		
4		
5	RETRO D MECANIQUE DAG	
6	RETRO G MECANIQUE DAD	
7		
8		
9		
10		
11		
12	RETRO D MECANIQUE DEGIVRANT DAG	
13	RETRO G MECANIQUE DEGIVRANT DAD	
14		
15		
16		
17		
18	RETRO D MECANIQUE DAG DAD	
19	RETRO G MECANIQUE DAG DAD	
20		

www.sepana.ir

Documents
Usage Public
Document Sharing Hub

Full document details: PSA A23 2510 1998

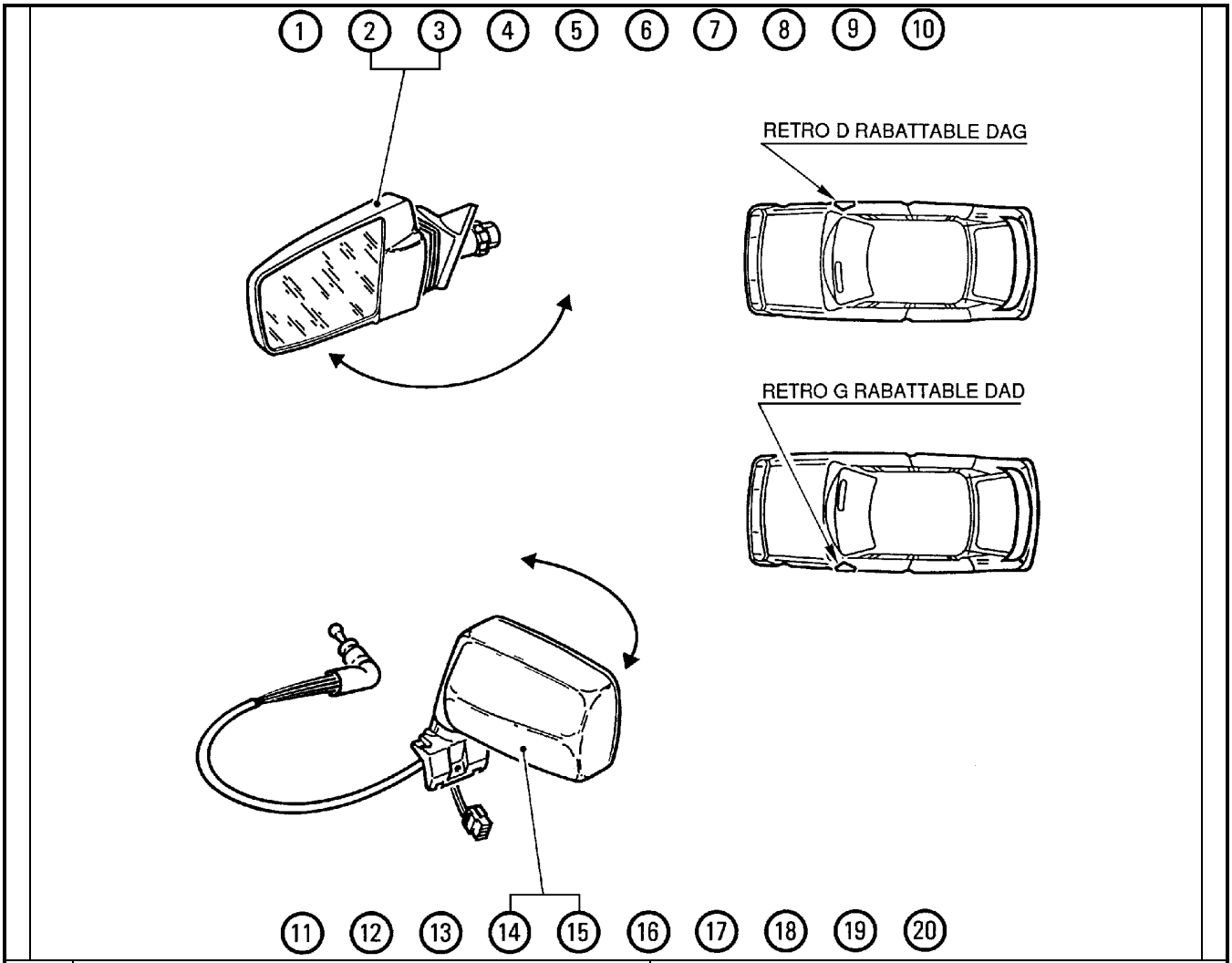

Rep	DESIGNATION FRANCAIS	
1		
2	RETRO D MECANIQUE RABATTABLE DAG	
3	RETRO G MECANIQUE RABATTABLE DAD	
4		
5		
6		
7		
8		
9		
10		
11		
12		
13		
14	RETRO D MECANIQUE RABATTABLE DEGIV DAG	
15	RETRO G MECANIQUE RABATTABLE DEGIV DAD	
16		
17		
18		
19		
20		

www.sepana.ir

Documents
Usage Public
Document Sharing Hub

Full document details: PSA A23 2510 1998