Published 03/28/2017
Copyright © 2017 Shell Global Solutions (US) Inc.
doi:10.4271/2017-01-0799
saefuel.saejournals.org

Impact of Fuel Sensitivity (RON-MON) on Engine Efficiency

Arjun Prakash, Chongming Wang, Andreas Janssen, Allen Aradi, and Roger Cracknell
Shell Global Solutions

ABSTRACT

Modern spark ignition engines can take advantage of better fuel octane quality either towards improving acceleration performance or fuel economy via an active ignition management system. Higher fuel octane allows for spark timing advance and consequently higher torque output and higher engine efficiency. Additionally, engines can be designed with higher compression ratios if a higher anti-knock quality fuel is used. Due to historical reasons, Research Octane (RON) and Motor Octane Number (MON) are the metrics used to characterize the anti-knock quality of a fuel. The test conditions used to compute RON and MON correlated well with those in older engines designed about 20 years ago. But the correlation has drifted considerably in the recent past due to advances in engine infrastructures mainly governed by stringent fuel economy and emission standards. In prior research, the octane response of modern engines seemed to correlate better with RON than MON; however, the impact of octane sensitivity (RON-MON) has not been evaluated in detail. In this study, the aforementioned relationship between engine octane appetite and octane sensitivity was studied in a single cylinder direct injection spark ignition (DISI) engine using six fuels with two levels of RON, each of which had three octane sensitivity levels ranging from 5 to 15. Experiments were conducted under three compression ratios ranging from 9.5:1 to 11.5:1. The results show that both higher RON and octane sensitivity have positive impacts on the engine thermal efficiency, with RON being more influential than octane sensitivity. It is also found that the effect of octane sensitivity was more pronounced at lower RON fuels.

CITATION: Prakash, A., Wang, C., Janssen, A., Aradi, A. et al., "Impact of Fuel Sensitivity (RON-MON) on Engine Efficiency," *SAE Int. J. Fuels Lubr.* 10(1):2017, doi:10.4271/2017-01-0799.

INTRODUCTION

Fuel octane quality can play a key role in reducing the fuel consumption and in optimizing engine performance. Hence, it is imperative to understand the response of modern spark ignition engines to octane quality. The engine management systems have become quite advanced in utilizing fuel octane quality either towards better performance or higher fuel economy. The octane response of modern engines correlates mostly with RON than MON. (1) In this study, we intend to explore the aforementioned relationship between engine octane appetite and fuel sensitivity (RON-MON).

The demand for higher octane number fuel has been on the rise in the recent past largely owing to the emissions standards. For example, the Federal regulations in the U.S require each vehicle manufacturer's average light-duty vehicle fleet to meet a 163 g/mile CO_2 emissions standard by 2025, which is equivalent to 54.5 mpg (2). Understanding the octane appetite of modern vehicles is therefore essential for the development of suitable on-road fuels. However, due to historical reasons Research Octane and Motor Octane Numbers (3,4) are still the metrics used to characterize a fuel's anti-knock quality. These octane indicators correlated reasonably well with engine behavior in the past. But the correlation has drifted considerably in the recent years due to advances in engine infrastructure, mainly influenced by the aforementioned stringent fuel economy standards. In this study, we intend to explore the relationship between engine response and octane quality of the fuel in a modern single cylinder engine and to specifically understand the importance of RON over MON and the impact of fuel sensitivity on engine performance.

Octane number is a measure of how well a fuel resists knock - an abnormal combustion process where the combustion of fuel/air mixture occurs spontaneously in the end gas rather than within a flame front initiated by spark ignition. A combustion flame generated by the spark propagates all the way to the cylinder wall during normal combustion. However, in a knocking case the spontaneous end gas combustion occurs at local zones ahead of the flame front. Knock is hard to control since it is related to the fuel chemistry, combustion chamber design, and engine operating conditions. Also, a severe knock accompanies high magnitude pressure oscillations, which can even damage the engine hardware.

The main strategy used by modern engines to avoid knock is *via* a knock sensor which detects knock and eliminates it by retarding the spark timing to lower the pressure and temperature inside the cylinder. However, retarding the spark timing lowers the torque output for a given amount of fuel. Thus, it is important to maintain the spark timing close to optimum timing to maximize the torque output of the engine. This can be done by using a high octane fuel - it is possible to advance the spark timing further to achieve higher torque for the same amount of injected fuel. The increased torque could be utilized in a vehicle either towards faster acceleration or improved fuel economy at a given engine operating point.

Full document details: SAE 2017-01-0799

It has been found that for engines produced after 1990s, the engine response to fuel octane quality is moving away from MON (and even RON to an extent) (5,1,6). From a combustion perspective, in-cylinder parameters for RON test are closer to those in a modern engine than the MON test. For a given end gas pressure at knocking conditions, the end gas temperature in a typical modern engine can be approximately 100K lower than the RON test and about 250K lower than the MON test, although the actual values depend on the boosting system, scavenging and charge cooling (for DISI) present in an individual engine (7). Hence, the autoignition propensity of a fuel in a typical modern engine for a given end gas pressure is, in sequence lower than RON and MON tests in a CFR (cooperative fuel research) engine. These observations would imply that for a fuel with a fixed RON, lowering the MON values or increasing the fuel octane sensitivity would result overall in an improved engine performance. In regards to the octane index (OI= RON - K·S, where K is an engine operating condition specific scaling factor and S=RON-MON is the octane sensitivity) studies carried out in literature, fuels of increasing sensitivity would also have higher octane indices for a given RON (because of negative K values under knock limiting conditions) thereby allowing the engine to operate close to the maximum brake torque (MBT).

Most of the modern engines exhibit negative K values under knock limiting conditions (1,8,9); K value studies found that fuels with higher RON and higher sensitivity were the best performers, using a decorrelated RON, MON matrix. (10) The fuels used in these studies are typically not market representative and do not adhere to regional fuel specifications as they are blended to meet a wide range of RON and MON values. Octane index studies are important from a fuel formulation and engine operating condition perspective but do not directly address fuel consumption, engine efficiency or engine design changes which are important factors in order to connect with end-user (driver) perception.

In this regard, a matrix of E10 fuels with market relevant octane numbers and sensitivity values were tested in a single cylinder engine at various speed-load conditions and compression ratios to study the impact on engine efficiency or specific fuel consumption. It was seen that both higher RON and higher sensitivity can result in an improved engine thermal efficiency and reduced fuel consumption with sensitivity playing a significant role at lower RON. Experimental details and results are described in the following sections.

EXPERIMENTAL DETAIL

Fuels

Six test fuels were used with a focus on sensitivity whilst keeping RON constant for a given subset as shown below. All fuels contained 10% v/v ethanol and no additives.

Table 1. Fuels Matrix based on Different Sensitivity Values

Fuel	RON	MON	S
F1	92	87	5
F2		82	10
F3		77	15
F4	98	93	5
F5		88	10
F6		83	15

Fuels F2 and F5 denote market realistic AKIs for regular (87) and premium grade (93) fuels in the North American market and corresponding segments elsewhere in terms of RON. Fuel F2 was used as the setup fuel to establish test parameters. All fuels were blended in-house (STCHa) to meet EN 228 specifications as closely as possible and transferred to the single cylinder test facility. Standard fuel analyses including RON, MON, unwashed/washed gums, water and ethanol content were carried out after blending (Appendix 1). Shell Helix Ultra ECT 5W30 was the lubricant used for this project and was changed biweekly.

Single Cylinder Engine

The experiment was conducted in an AVL single cylinder 4-stroke (DISI) research engine, the setup of which is presented in Figure 1 (Specifications in Table 2). Its combustion system features a 4-valve pent roof cylinder head equipped with variable valve timing (VVT) systems for both intake and exhaust valves. The cylinder head is equipped with a centrally mounted outward opening piezo direct injector. The spark plug is located at the centre of the combustion chamber slightly tilting towards the exhaust side.

The engine is coupled to an electric dynamometer, which is able to control the engine at a constant speed (± 1 rpm) regardless of engine power outputs. The engine is controlled via an IAV FI2RE management system. An AVL Indicom system is used for real time combustion indication and analysis. A Siemens CATs system is used for signal acquisition and recording, and it communicates with the IAV FI2RE management system and the AVL Indicom. The Siemens CATs system is also used for controlling air, fuel, coolant and oil conditioning units, and emission measurement equipment.

Documents
Document Sharing Hub

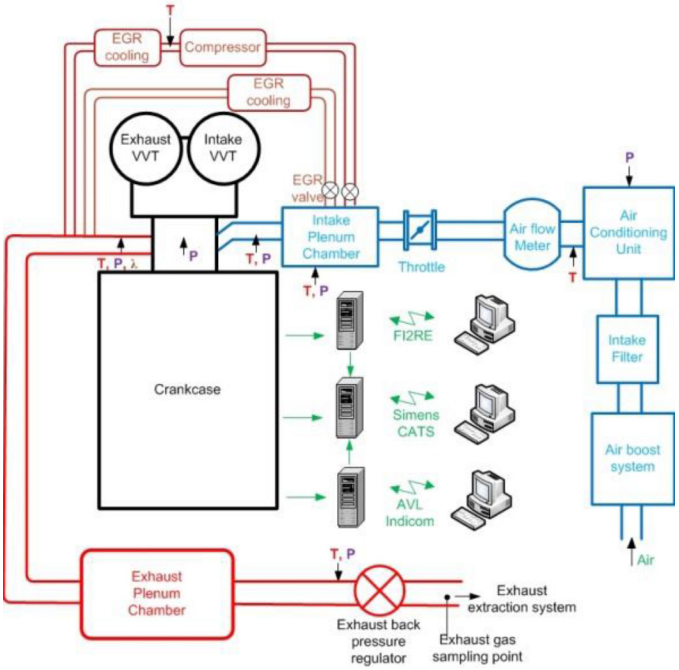

Figure 1. Engine setup

A Kistler pressure transducer used for the in-cylinder pressure measurement is installed in a sleeve on the intake and exhaust bridge. The cylinder pressure is collected via a charge amplifier (ETAS ES630.1) with a resolution of 0.1 crank angle (CA) between -30 °CA and 70 °CA after top dead centre (ATDC), and a resolution of 1 °CA in the rest of the crank angles. The top dead centre (TDC) mentioned here is the TDC of the combustion cycle. Some key temperature and pressure measurement location are briefly labelled as 'T' and 'P' in Figure 1.

Table 2. Engine specification

Parameter	Details
Manufacturer	AVL
Type	Single Cylinder Engine
Emission Class	Euro 6 engine hardware
Displacement (bore/stroke)	454 cm^3 (82 mm/86 mm)
Aspiration	Boosted (max 2.5 bar absolute)
Maximum engine speed	6000 rpm
Injection	Direct piezo injection: up to 200 bar
Compression ratio	9.5:1, 10.5:1 and 11.5:1
Others	IMEP up to 30 bar, Max. peak pressure: 130 bar continuous

The engine intake system is connected with an external air handling device, capable of delivering up to 3 bar boosted air. Air is firstly filtered and dried, and then delivered to a conditioning system with a capacity of approximately 200 L, in which its pressure and temperature can be precisely close-loop controlled. Temperatures of fuel, coolant and oil are closed-loop controlled by individual AVL conditioning systems. Fuel consumption was measured by an AVL fuel mass flow meter.

In this project, three compression ratios were studied, including 9.5:1, 10.5:1, and 11.5:1, which will be noted as CR1, CR2 and CR3, respectively.

Test Procedure

Table 3. Test Schedule

Phase	Days	Fuel	Compression ratio	Comment
Phase 0	5	F2	CR3	Preliminary tests for checking the robustness of test matrix, and basic parameters such as the spark timing and lambda under the highest compression ratio of 11.5
Phase 1	5	F2	CR3, CR1 and CR2	(CR1=9.5; CR2=10.5; CR3=11.5)
	5	F6	CR2, CR1 and CR3	
	5	F1	CR3, CR1 and CR2	
	1	F2	CR2	Repeat F2 at CR2
	5	F5	CR2, CR1 and CR3	
	5	F4	CR3, CR1 and CR2	
	5	F3	CR2, CR1 and CR3	
	1	F2	CR2	Repeat F2 at CR2

As outlined in Table 3, all fuels were tested at three compression ratios. The CR of the engine was changed by manually adding different size metal sheets between the crank case and the cylinder liner. Based on the original CR and the size of the metal sheet, the new CR was calculated. Fuel F2 was used as the setup fuel to establish test parameters at the highest compression ratio of 11.5 in Phase 0. The lubricant was changed intermittently along with cleaning of engine deposits. The piston of the engine was cleaned on a biweekly basis using a sand spray. The engine was operated at motoring and firing reference points daily to ensure normal engine operation. Fuel F2 was repeated thrice in the CR2 configuration as shown to get an estimate for the test repeatability. Standard deviation for fuel consumption measurements was found to be at 0.9%.

Documents
Document Sharing Hub

The test procedure for each fuel and each engine configuration is presented in Table 4.

Table 4. Test protocol

Step	Stage	Description
a	Set up new engine configuration , engine warm up, and fuel conditioning	Step 1: Connect the fuel tank and flush the fuel system to avoid any contamination from previous tests if a new fuel is used. Step 2: Set up new engine compression ratio; warm up the engine until oil temperature reaches 360K and coolant temperature reaches 353K.
b	Engine motoring test	Check engine for leakage. Check for oil dilution by measuring hydrocarbon emissions.
c	Running reference point	Step 1: Check if all measurement channels are okay and ready, and check if the engine is in good condition. Step 2: Heat up intake air to set value
d	Engine test	Execute test as per the test matrix

Engine test conditions are presented in Table 5. Note that the optimization settings for parameters such as injection timing, and intake and exhaust valve timing, obtained with F2 were used for rest of the fuels. For spark timing, fuel-specific optimized spark timing, referred as MBT/KLSA timing was used for all fuels. All tests were carried out at stoichiometric air-fuel ratio (λ=1), intake air temperature of 30°C and 200 bar injection pressure. Maximum IMEP points tested depended on the compression ratio of the engine configuration that limited the operability range of the engine. Measurements were taken for each operating point at 10 Hz on CATS software, and every 100 cycles (for in-cylinder, intake and exhaust pressure with injection and ignition signals) were recorded on AVL Indicom software.

Table 5. Engine Operating Conditions Tested

Engine Speed (rpm)	IMEP Sweep (bar)
1000	2, 4, 6.5, 8, 9.5, 12, 14, 16
1800	2, 4, 6.5, 8, 9.5, 12, 14, 16, 18, 20, 22
2500	
3500	

RESULTS AND DISCUSSION

Engine thermal efficiency (η) values were computed for various operating conditions for all test fuels. Indicated specific fuel consumption (ISFC) and the lower heating values (LHV) for the corresponding fuel were used to compute η (1/ISFC·LHV). Figure 2 shows the contour plots of efficiency for various speed-load conditions at CR1, CR2 and CR3 for fuels F1-F3 (fuels with constant RON of 92 but varying sensitivity values).

Several observations can be made using these plots - the operability regime in terms of the engine load becomes constrained as the engine becomes more prone to knock at higher compression ratios (as seen by the reduction in contour areas). (11) However, going from left to right in Figure 2 it can be seen that more regions of higher efficiency appear at higher compression ratios. The impact of increasing octane sensitivity was not significant going from F1 to F2 (shown by a blue arrow denoting 'no change' overall), but was significant for the fuels going from F1 to F3 and F2 to F3 (shown by green arrows denoting a 'beneficial change'). These effects can be quantitatively checked by considering one operating point of 3500 rpm and 14 bar at which the engine showed maximum observed η values. Sensitivity increase of 10 octane numbers (F1 to F3 or MON shift from 87 to 77) resulted in an efficiency increase of 1.9-3.9%, depending on the compression ratio (calculated as $(\eta_{F3}-\eta_{F1})/\eta_{F1}*100$), whereas, a sensitivity increase of 5 octane numbers (F2 to F3 or MON shift from 82 to 77) had an efficiency increase of 2.8-3.7%.

The next subset of fuels tested (F4-F6) had a higher RON (98), and increasing sensitivity within these fuels resulted in a different behavior. As seen in Figure 3, going from F4 to F5 (sensitivity increase of five octane numbers or MON shift from 93 to 88) resulted in an efficiency benefit of 1.3-2.1% (indicated by a green arrow). Whereas, sensitivity increase of five more octane numbers from F5 to F6 (MON shift from 88 to 83) and a sensitivity increase of fifteen octane numbers between F4 and F6 showed no significant differences (indicated by blue arrows). These observations indicated that the impact of sensitivity is overall lower at higher RON numbers (98 vs. 92).

From an octane index viewpoint (OI = RON - K·S), a fuel with a given RON but a higher sensitivity value results in a bigger OI if the K value is negative (1). K values have been found to be negative for modern engines under knock limiting conditions. (1) Sensitivity is the difference between the autoignition chemistry of PRF fuels and a given test fuel (12) - higher the sensitivity, more pronounced would be the difference in the autoignition chemistry. Hence, the perceived fuel octane quality by the engine under knock limited conditions would be higher for fuels with increasing octane sensitivity for a given RON as this implies further deviation from MON test conditions. This explains the results observed in Figure 2. However, in order to understand the results shown in Figure 3 for a higher RON of 98, it is important to note that the engine thermal efficiencies reached are high (Table 6) implying spark timing values at or close to MBT. Hence, increasing sensitivity at a high RON of 98 increases OI but may not differentiate in terms of engine efficiency for having reached a regime of optimum values based on engine calibration.

Documents
Document Sharing Hub