AEROSPACE RECOMMENDED PRACTICE

ARP6909™ | **REV. A**

Issued 2020-11
Stabilized 2025-05

Superseding ARP6909

Methods for Determining the Seat Reference Point (SRP) and the Buttock Reference Point (BRP) for Seats in Transport Aircraft, Civil Rotorcraft, and General Aviation Aircraft

RATIONALE

This document has been determined to contain basic and stable technology which is not dynamic in nature.

STABILIZED NOTICE

This document has been declared "STABILIZED" by SAE Aircraft Seat Committee and will no longer be subjected to periodic reviews for currency. Users are responsible for verifying references and continued suitability of technical requirements. Newer technology may exist.

SAE Executive Standards Committee Rules provide that: "This report is published by SAE to advance the state of technical and engineering sciences. The use of this report is entirely voluntary, and its applicability and suitability for any particular use, including any patent infringement arising therefrom, is the sole responsibility of the user."

SAE reviews each technical report at least every five years at which time it may be revised, reaffirmed, stabilized, or cancelled. SAE invites your written comments and suggestions.

Copyright © 2025 SAE International

All rights reserved. No part of this publication may be reproduced, stored in a retrieval system, transmitted, in any form or by any means, electronic, mechanical, photocopying, recording, or otherwise, or used for text and data mining, AI training, or similar technologies, without the prior written permission of SAE.

TO PLACE A DOCUMENT ORDER: **Tel: 877-606-7323 (inside USA and Canada)**
Tel: +1 724-776-4970 (outside USA)
Fax: 724-776-0790
Email: CustomerService@sae.org
SAE WEB ADDRESS: http://www.sae.org

For more information on this standard, visit
https://www.sae.org/standards/content/ARP6909A/

Documents
Document Sharing Hub

Full document details: SAE ARP6909A

1. SCOPE

This Aerospace Recommended Practice (ARP) defines acceptable methods for determining the seat reference point (SRP), and the documentation requirements for that determination, for passenger and crew seats in Transport Aircraft, Civil Rotorcraft, and General Aviation Aircraft.

2. APPLICABLE DOCUMENTS

The following publications form a part of this document to the extent specified herein. The latest issue of SAE publications shall apply. The applicable issue of other publications shall be the issue in effect on the date of the purchase order. In the event of conflict between the text of this document and references cited herein, the text of this document takes precedence. Nothing in this document, however, supersedes applicable laws and regulations unless a specific examption has been obtained.

2.1 SAE Publications

Available from SAE International, 400 Commonwealth Drive, Warrendale, PA 15096-0001, Tel: 877-606-7323 (inside USA and Canada) or +1 724-776-4970 (outside USA), www.sae.org.

AS8049 Performance Standards for Seats in Civil Rotorcraft, Transport Aircraft, and General Aviation Aircraft

SAE J826 Devices for Use in Defining and Measuring Vehicle Seating Accommodation

SAE J1733 Sign Convention for Vehicle Crash Testing

SAE J4002 H-Point Machine (HPM-II) Specifications and Procedure for H-Point Determination – Auditing Vehicle Seats

"Gowdy, V., DeWeese, R., Beebe, M., Wade, B. et al., "A Lumbar Spine Modification to the Hybrid III ATD For Aircraft Seat Tests," SAE Technical Paper 1999-01-1609, 1999, https://doi.org/10.4271/1999-01-1609."

Documents
Document Sharing Hub

Full document details: SAE ARP6909A

2.2 Code of Federal Regulations (CFR) Publications

Available from the United States Government Printing Office, 732 North Capitol Street, NW, Washington, DC 20401, Tel: 202-512-1800, www.gpo.gov.

Drawing ATD 3703 Pelvis Structure and Flesh Assembly

Drawing GM 78051-58 Pelvic Structure Machining ASM – Hybrid II

Code of Federal Regulations, Title 49 Part 572 (49 CFR 572) Anthropomorphic Test Devices

3. DEFINITIONS

ATD: Anthropormorphic test device, commonly referred to a test dummy.

BUTTOCK REFERENCE POINTS (BRP): The buttock reference points are the points on the bottom surface of the buttocks directly below each ischial tuberosity when sitting in the seat (human subject or ATD).

CG: Center of gravity.

COMPRESSED CUSHION DATUM (CCD): The vertical height of the point on the seat bottom cushion below the ischial tuberosity (buttock reference point) of a subject or ATD weighing 160 to 180 pounds (73 to 82 kg) placed in the seat.

FAA HYBRID III ATD: A 49 CFR Part 572 Subpart E 50th percentile male ATD modified in accordance with SAE Technical Paper 1999-01-1609.

H-POINT: Refer to SAE J826 or SAE J4002 Definitions – H-Point.

H-POINT MACHINE I: Refer to SAE J826.

H-POINT MACHINE II: Refer to SAE J4002.

HYBRID II ATD: A 49 CFR Part 572 Subpart B 50th percentile male ATD.

PELVIS ANGLE: The angle between the horizontal axis of the seat coordinate system and the plane of the lumbar load cell mounting surface of the ATD pelvis (see Figure 1).

PELVIS X-AXIS: A line on the midsagittal plane, passing through the pelvis Y-Axis, parallel to the lumbar load cell mounting surface. See Figure 2 for an illustration of pelvis coordinate system.

PELVIS Y-AXIS: A line passing throught both femur ball centers. See Figure 2 for an illustration of pelvis coordinate system.

PELVIS Z-AXIS: A line on the midsagittal plane, passing through the pelvis Y-Axis, perpendicular to the lumbar load cell mounting surface. See Figure 2 for an illustration of pelvis coordinate system.

SEAT COORDINATE SYSTEM: A coordinate system relative to each seat place that rotates and translates with the seat. For a forward facing seat, this coordinate system orientation and sign convention are the same as the Vehicle Dynamics Coordinate System defined in SAE J1733.

SEAT REFERENCE POINT (SRP): The seat reference point is the intersection of the compressed cushion datum and the back tangent line of a seat occupied by a 160 to 180 pounds (73 to 82 kg) occupant. The lateral location of the SRP of the seat place is at the lateral midpoint of the seat place.

Documents
Document Sharing Hub
Full document details: SAE ARP6909A

4. DETERMINATION OF BUTTOCK REFERENCE POINT (BRP) USING AN ATD

The buttock reference points are the points on the bottom surface of the buttocks directly below each ischial tuberosity when the ATD is sitting in the seat. Figure 2 illustrates the location of the ischial tuberosities relative to the H-Point for the Hybrid II and the FAA Hybrid III ATDs.

For the Hybrid II and FAA Hybrid III ATD, these points are located 2 inches (51 mm) either side of the ATD midsaggital plane. Their fore/aft location (X) is a function of the H-Point location and the "pelvis angle." See Figure 3. Their location relative to the H-Point can be calculated using the following equation:

$$X = -3.12 \text{ inches (79 mm)} \times \text{SIN}(6.44 \text{ degrees} - \text{"pelvis angle" degrees}) \quad \text{(Eq. 1)}$$

NOTE: This equation calculates the BRP in the seat coordinate system.

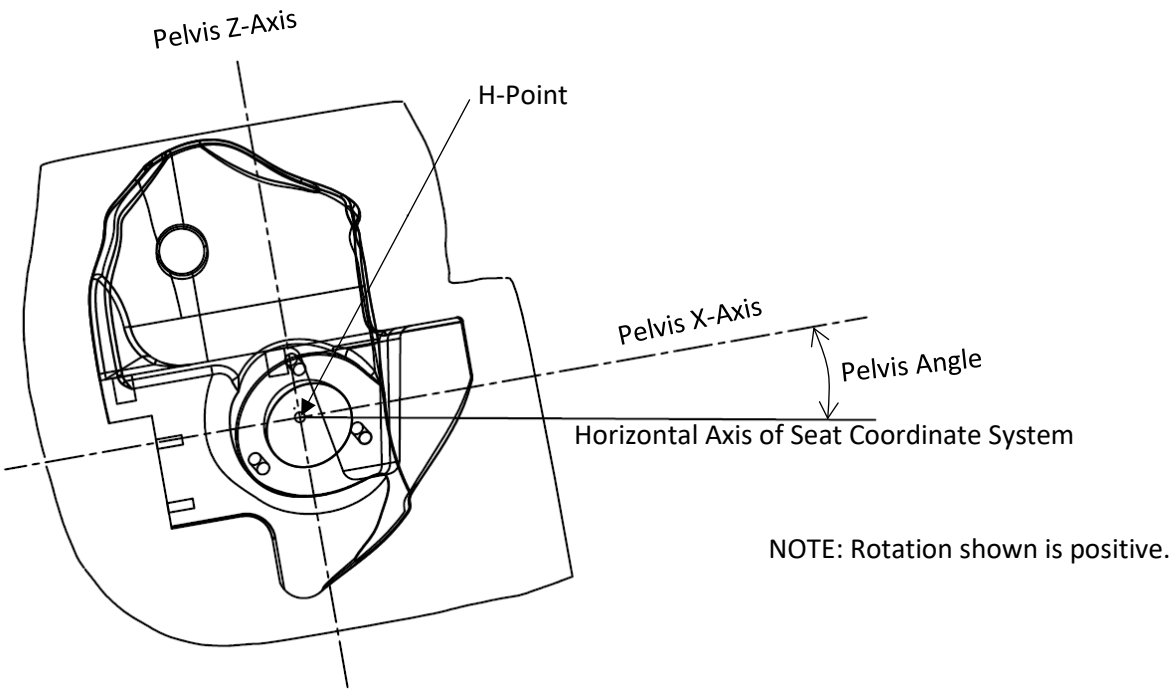

Figure 1 - Definition of pelvis angle

Documents
Document Sharing Hub
Full document details: SAE ARP6909A

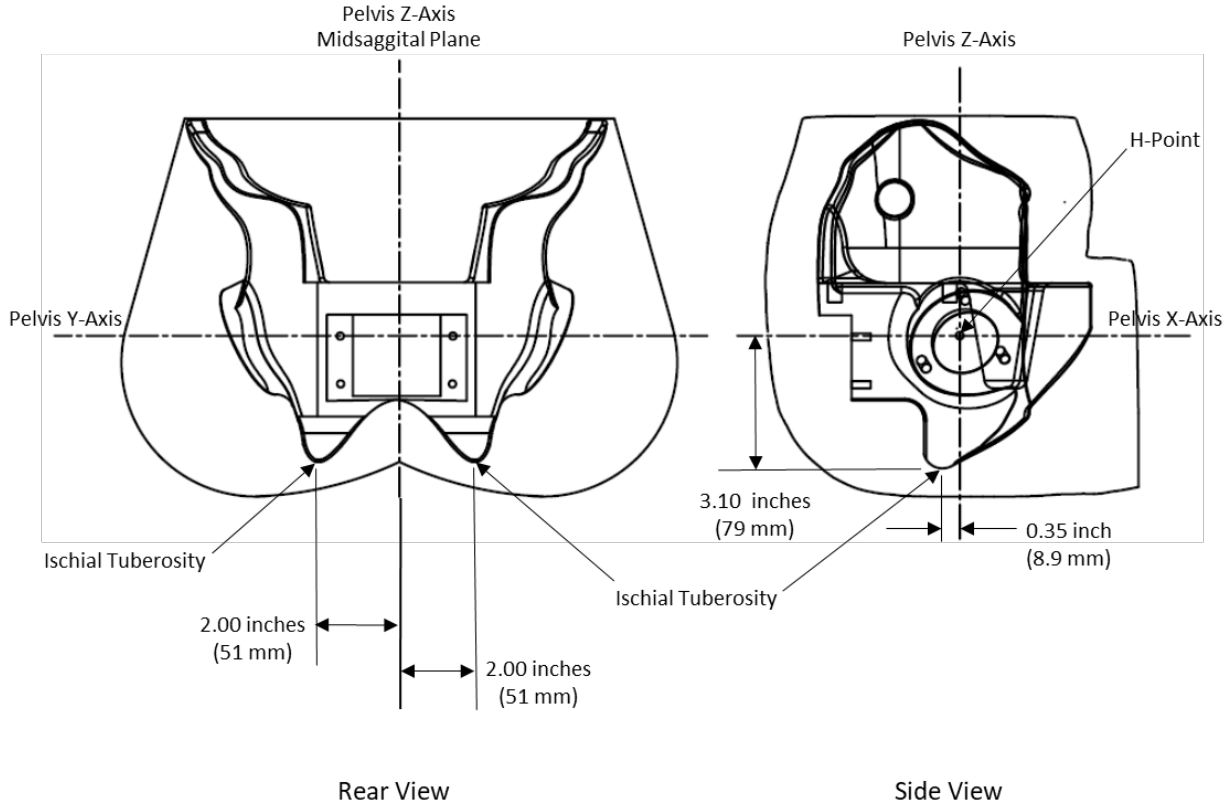

Figure 2 - Location of ischial tuberosities on Hybrid II and FAA Hybrid III ATDs

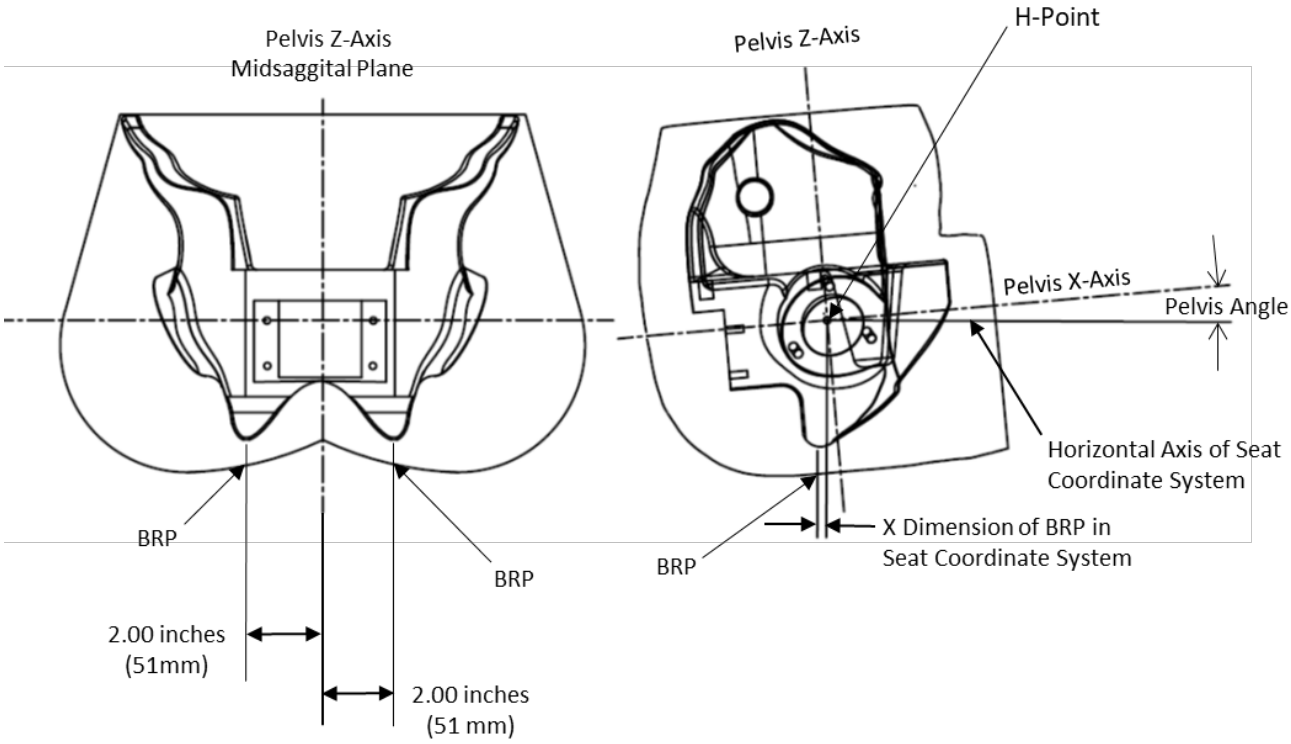

Figure 3 - Location of BRPs

Documents
Document Sharing Hub
Full document details: SAE ARP6909A

5. DETERMINATION OF SEAT REFERENCE POINT (SRP)

There are five acceptable methods for determining the SRP location on a seat.

- The H-Point Method using SAE J4002 H-Point Machine II
- The H-Point Method using SAE J826 H-Point Machine I
- The H-Point Method using ATD
- The Pin Method (limited use, see below)
- The Soft Bar Method (limited use, see below)

The three H-Point methods provide more consistent results between determinations within the same method, while the pin method and the soft bar method tend to provide results with a larger variance between determinations. The H-Point methods are now the preferred methods for new seat models.

NOTE: The back surface of the SAE J826 machine is flatter and shorter than the back surface of a 50th percentile ATD and the SAE J4002 machine. For seats with seat backs that have geometrically significant lumbar or lateral support designs or a low, protruding headrest, the SAE J826 machine may sit further forward than the ATD or SAE J4002 machine due to contact with the lumbar or lateral support and it may lean further back due to lack of contact with the low headrest, producing a greater seat back angle. This can cause the SAE J826 machine to produce forward/aftward (seat X dimension) SRP results that are further forward than produced by the ATD or SAE J4002 machine. For seats with these features, the H-Point Using ATD method or the H-Point Using SAE J4002 H-Point Machine II method would provide a more consistent interaction with the seat back and produce a more consistent SRP location between the methods.

The pin method and the soft bar method are not preferred methods and have been moved to Appendix A. These methods have not been updated since original publication in AS8049 and are retained in Appendix A of this document for historical records. They are still acceptable methods to be used for determining the location of the seat SRP for comparison purposes only when the original SRP on an existing seat model was determined using one of these methods. These methods are no longer acceptable for determining the SRP on new seat models.

The SRP must be determined using only one of the H-Point methods defined in this document for a specific seat model. The selected method shall be documented, and must be used consistently when evaluating all variations to the seat model or future changes to the seat model design.

5.1 H-Point Method Using SAE J4002 H-Point Machine II – Procedure for Establishing SRP (see Figure 4)

1. Place an H-Point Machine II in the seat in accordance with SAE J4002, except do not include the legs.
2. Measure and record the horizontal and vertical location of the H-Point divot mark on each side of the machine relative to a seat datum point in the seat coordinate system.
3. Average the measured locations on each side of the machine. This is the H-Point location.
4. Measure and record the seat back angle. The seat back angle is the torso angle as defined and measured per the SAE J4002 requirement defining the measurement procedure for Record Measurements - Digitize HPM Points, Torso Angle and Cushion Angle.
5. Establish the back tangent line. The back tangent line is the line parallel to the seat back angle passing through a point 5.50 inches (140 mm) directly behind the H-Point.
6. Establish the Compressed Cushion Datum (CCD). The CCD is a line parallel to the x-axis of the seat coordinate system 3.85 inches (98 mm) below the H-Point.
7. The SRP is located at the intersection of the CCD (Step 6) and the back tangent line (Step 5).

Documents
Document Sharing Hub
Full document details: SAE ARP6909A