FEDERAL SUPPLY CLASS

RATIONALE

AS1013 HAS BEEN REAFFIRMED TO COMPLY WITH THE SAE FIVE-YEAR REVIEW POLICY.

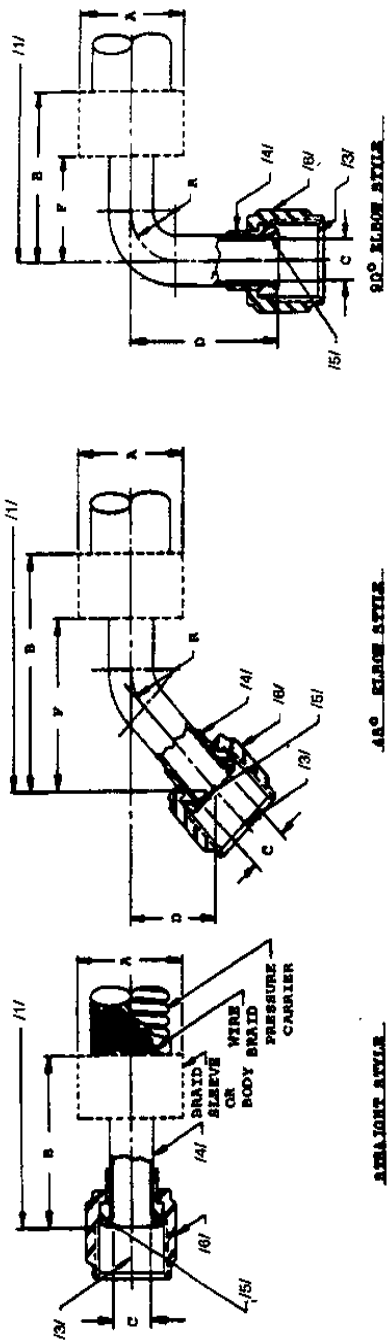


FIGURE 1

**SAE values your input. To provide feedback on this Technical Report, please visit http://www.sae.org/technical/standards/AS1013**

THIRD ANGLE PROJECTION

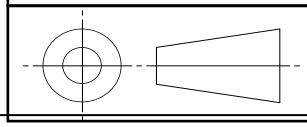

ISSUED 1960-07 REAFFIRMED 2014-10

# AS1013

SAE Technical Standards Board Rules provide that: "This report is published by SAE to advance the state of technical and engineering sciences. The use of this report is entirely voluntary, and its applicability and suitability for any particular use, including any patent infringement arising therefrom, is the sole responsibility of the user."

SAE reviews each technical report at least every five years at which time it may be revised, reaffirmed, stabilized, or cancelled. SAE invites your written comments and suggestions.

## AEROSPACE STANDARD

FITTING END; ATTACHABLE, SWIVEL FEMALE 37° FLARED TUBE, FLEXIBLE METAL HOSE - STRAIGHT, 45° ELBOW AND 90° ELBOW STYLES

**AS1013**
SHEET 1 OF 3

Copyright 2014 SAE International
All rights reserved. No part of this publication may be reproduced, stored in a retrieval system or transmitted, in any form or by any means, electronic, mechanical, photocopying, recording, or otherwise, without the prior written permission of SAE.

**TO PLACE A DOCUMENT ORDER:** **Tel: 877-606-7323 (inside USA and Canada)** **Tel: +1 724-776-4970 (outside USA)**
**Fax: 724-776-0790** **Email: CustomerService@sae.org** **SAE WEB ADDRESS: http://www.sae.org**

Documents Document Sharing Hub
Full document details: SAE AS1013

TABLE 1

| BASIC DIMENSIONS - SWIVEL FEMALE, 37° FLARED TUBE | | | | | | STRAIGHT STYLE | | 45° ELBOW STYLE | | | | | |
|---|---|---|---|---|---|---|---|---|---|---|---|---|---|
| SIZE DASH NO. | HOSE ID TUBE OD | A TURN DIA. | C ID | R | | B | | B | | D | | F | |
| | REF. | MAX. | MIN. | MIN. | MAX. | MIN. | MAX. | MIN. | MAX. | MIN. | MAX. | MIN. | MAX. |
| 3 | 3/16 | .725 | .089 | .172 | .203 | .910 | 1.690 | .969 | 1.891 | .578 | .686 | .641 | 1.141 |
| 4 | 1/4 | .798 | .146 | .234 | .266 | 1.020 | 1.690 | 1.047 | 2.031 | .641 | .750 | .734 | 1.234 |
| 5 | 5/16 | .870 | .177 | .297 | .328 | 1.050 | 2.000 | 1.125 | 2.094 | .688 | .781 | .813 | 1.297 |
| 6 | 3/8 | .943 | .271 | .359 | .391 | 1.070 | 2.000 | 1.188 | 2.156 | .719 | .844 | .859 | 1.438 |
| 8 | 1/2 | 1.160 | .365 | .484 | .516 | 1.180 | 2.125 | 1.609 | 2.656 | .844 | .969 | 1.047 | 1.672 |
| 10 | 5/8 | 1.303 | .455 | .609 | .641 | 1.350 | 2.375 | 1.781 | 2.875 | .969 | 1.141 | 1.219 | 1.969 |
| 12 | 3/4 | 1.592 | .568 | .734 | .766 | 1.430 | 2.500 | 1.906 | 3.156 | 1.031 | 1.219 | 1.328 | 2.281 |
| 16 | 1 | 1.895 | .778 | .969 | 1.031 | 1.690 | 2.641 | 2.125 | 3.547 | 1.156 | 1.422 | 1.563 | 2.734 |
| 20 | 1-1/4 | 2.329 | 1.031 | 1.219 | 1.281 | 1.830 | 2.808 | 2.625 | 4.063 | 1.297 | 1.672 | 1.813 | 3.078 |
| 24 | 1-1/2 | 2.622 | 1.278 | 1.469 | 1.531 | 2.060 | 3.340 | 2.938 | 5.297 | 2.109 | 2.688 | 2.109 | 3.704 |
| 32 | 2 | 3.344 | 1.745 | 1.969 | 2.031 | 2.703 | 3.500 | 3.531 | 6.047 | 2.703 | 3.141 | 2.703 | 4.359 |

| SIZE DASH NO. | 90° ELBOW STYLE | | | | | |
|---|---|---|---|---|---|---|
| | B | | D | | F | |
| | MIN. | MAX. | MIN. | MAX. | MIN. | MAX. |
| 3 | .484 | 1.328 | .484 | .875 | .172 | .578 |
| 4 | .547 | 1.438 | .547 | .938 | .234 | .641 |
| 5 | .609 | 1.500 | .656 | 1.063 | .297 | .703 |
| 6 | .672 | 1.547 | .750 | 1.172 | .359 | .828 |
| 8 | .891 | 1.984 | .938 | 1.359 | .484 | 1.016 |
| 10 | 1.078 | 2.109 | 1.109 | 1.531 | .609 | 1.203 |
| 12 | 1.297 | 2.375 | 1.268 | 1.641 | .734 | 1.516 |
| 16 | 1.531 | 2.734 | 1.531 | 1.969 | .969 | 1.906 |
| 20 | 2.016 | 3.141 | 1.859 | 2.297 | 1.219 | 2.156 |
| 24 | 2.281 | 3.500 | 2.172 | 2.609 | 1.469 | 3.031 |
| 32 | 2.781 | 4.094 | 2.906 | 3.250 | 1.969 | 3.031 |




Full document details: SAE AS1013

AVA Documents

Document Sharing Hub