FEDERAL SUPPLY CLASS
6145

RATIONALE

SPECIFICATION UPDATED TO INCLUDE AS29606 CONDUCTOR REQUIREMENTS, ROHS RESTRICTIONS, AND AS22759 MODIFICATIONS. THIS CHANGE ALSO INCREASES THE MAXIMUM WEIGHT REQUIREMENTS FOR WIRE SIZES 8 THROUGH 02 TO ACCOUNT FOR INCREASED CIRCULAR MIL AREA (CMA) ADOPTED IN AS29606. AS22759 IS A CONVERTED MILITARY SPECIFICATION ORIGINALLY NOTED AS MIL-W-22759 CREATED IN 1971. CONDUCTOR REQUIREMENTS WERE ORIGINALLY DEFINED BY ASTM B3, B298, AND B355 FOR TIN, SILVER, AND NICKEL PLATE RESPECTIVELY. THESE SPECIFICATIONS CONTROLLED THE CONDUCTOR BY ESTABLISHING STRAND SIZE, CONDUCTOR SIZE, AND MAXIMUM DCR (DIRECT CURRENT RESISTANCE). BY THE LATE 1980'S, CONDUCTOR PRODUCERS WERE PRODUCING TIGHT TOLERANCE CONDUCTORS WHICH WERE MADE AT THE MINIMUM DIMENSIONAL AND MAXIMUM DCR LIMITS OF THE SPECIFICATION TO REDUCE THE WEIGHT (MASS) OF THE FINALLY INSULATED WIRE. BY THE EARLY 1990'S, THE TIGHT TOLERANCE CONDUCTORS WERE PREVALENT THROUGHOUT AEROSPACE. ABOUT THE SAME TIME, LARGE GAUGE SIZE CONDUCTORS (SIZE 8 THROUGH 4/0) STARTED EXHIBITING CRIMP FAILURES IN TERMINAL LUGS MOUNTED ON AIRCRAFT GENERATORS. SINCE THESE CIRCUITS ROUTED PRIMARY ELECTRICAL POWER FROM THE GENERATOR TO THE MAIN POWER DISTRIBUTION CENTERS, CRIMP DEGRADATION RESULTING IN DISRUPTION OF ELECTRICAL POWER CAUSED SIGNIFICANT CONCERN. SEVERAL OEM'S, AS WELL AS NAVY AND AIR FORCE LABORATORIES, INVESTIGATED THE FAILURES AND DETERMINED THAT THE FAILED CRIMPS WERE DUE TO A COMBINATION OF LOW CMA, HIGH VIBRATION, AND THERMAL CYCLING. ADDITIONAL TESTING ESTABLISHED MINIMUM CMA LEVELS WHICH WOULD PREVENT THE CRIMP FAILURES. THESE NEW LIMITS WERE OFFERED TO ASTM BUT REJECTED. NAVAIR THEN PRODUCED AN ENGINEERING POSITION LETTER (EPL) TO MANDATE THE INCREASED CMAS ON STRANDING USED IN AS22759 CONSTRUCTIONS. NAVAIR THEN CREATED MIL-W-29606, WHICH WAS INTENDED TO REPLACE THE ASTM SPECIFICATIONS AS THE REQUIRED CONDUCTOR SPECIFICATION. BEFORE THE MIL-W-29606 COULD BE ADDED TO MIL-W-22759, THE SPECIFICATION TRANSITION AND ADOPTION TOOK PLACE CONVERTING THE DOCUMENTS FROM MILITARY SPECIFICATIONS TO AS DOCUMENTS IN THE 1999 TO 2000 TIME FRAME. SINCE THE EPL NO LONGER HAD LEGAL STANDING AFTER THE CONVERSION, WIRE PRODUCERS DID NOT HAVE TO ABIDE BY THE RESTRICTIONS WHICH ALLOWED THIS ISSUE TO CREEP BACK INTO THE PRODUCTS FROM TIME TO TIME. IN 2011, THE SAE AE-8D COMMITTEE OPENED A PROJECT TO UPDATE THE AS22759 AND ITS ASSOCIATED DETAILED SPECIFICATION SHEETS. WHEN LOOKING AT THIS ISSUE, THE COMMITTEE DECIDED TO ADOPT MIL-W-29606 (NOW AS29606) AND REPLACE THE ASTM REQUIREMENTS WITH THE AS29606 REQUIREMENTS. SINCE THE DIAMETER RANGE OF THE CONDUCTOR STRANDS NEEDED TO SHIFT SLIGHTLY TO THE RIGHT TO MEET THE NEW MINIMUM CMA REQUIREMENTS, OVERALL PRODUCT WEIGHT MAXIMUMS SHIFTED ABOUT 3 TO 5%. THE COMMITTEE EVALUATED SEVERAL METHODS OF INCORPORATING THIS CHANGE, INCLUDING CANCELING AND SUPERSESSION, BUT THE END USERS DID NOT WANT TO CHANGE PART NUMBERS FOR PRODUCTS WHICH HAVE BEEN USED IN AEROSPACE AND INDUSTRY FOR OVER 40 YEARS AND IS CURRENTLY ON THOUSANDS OF DRAWINGS. SINCE THESE PRODUCTS ARE PRIMARILY USED FOR PRIMARY POWER DISTRIBUTION FROM THE GENERATORS TO THE MAIN DISTRIBUTION PANELS, THE WEIGHT INCREASE TO THE ELECTRICAL INTERCONNECT SYSTEM IS CONSIDERED INSIGNIFICANT. SINCE THIS CHANGE DOES AFFECT THE MAXIMUM WEIGHT LIMITS FOR SIZES 8 THROUGH 4/0, END USERS SHOULD VERIFY THAT THE NEW WEIGHT RANGES MEET THE DESIGN REQUIREMENTS OF LEGACY APPLICATIONS.

AS22759/184B HAS BEEN REAFFIRMED TO COMPLY WITH THE SAE FIVE-YEAR REVIEW POLICY.

NOTICE

THE COMPLETE REQUIREMENTS FOR PROCURING THE PRODUCT DESCRIBED HEREIN SHALL CONSIST OF THIS DOCUMENT AND THE LATEST ISSUE OF AS22759.

For more information on this standard, visit
https://www.sae.org/standards/content/AS22759/184B/

THIRD ANGLE PROJECTION

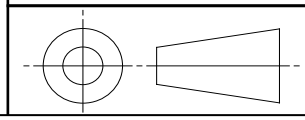

ISSUED 2010-02 REVISED 2017-09 REAFFIRMED 2022-07

SAE Executive Standards Committee Rules provide that: " This report is published by SAE to advance the state of technical and engineering sciences. The use of this report is entirely voluntary, and its applicability and suitability for any particular use, including any patent infringement arising therefrom, is the sole responsibility of the user."

SAE reviews each technical report at least every five years at which time it may be revised, reaffirmed, stabilized, or cancelled. SAE invites your written comments and suggestions.

CUSTODIAN: AE-8/AE-8D

PROCUREMENT SPECIFICATION: NONE

SAE INTERNATIONAL

AEROSPACE STANDARD

WIRE, ELECTRICAL, POLYTETRAFLUOROETHYLENE/ POLYIMIDE INSULATED, SMOOTH SURFACE, NORMAL WEIGHT, NICKEL-COATED COPPER CONDUCTOR, 260 °C, 600 VOLTS ROHS

AS22759™/184
SHEET 1 OF 5

REV. B

Copyright © 2022 SAE International
All rights reserved. No part of this publication may be reproduced, stored in a retrieval system or transmitted, in any form or by any means, electronic, mechanical, photocopying, recording, or otherwise, without the prior written permission of SAE.

TO PLACE A DOCUMENT ORDER: **Tel: 877-606-7323 (inside USA and Canada)** **Fax: 724-776-0790** **Tel: +1 724-776-4970 (outside USA)** **Email: CustomerService@sae.org** **SAE WEB ADDRESS: http://www.sae.org**

AVA Document Sharing Hub

Full document details: SAE AS22759_184B

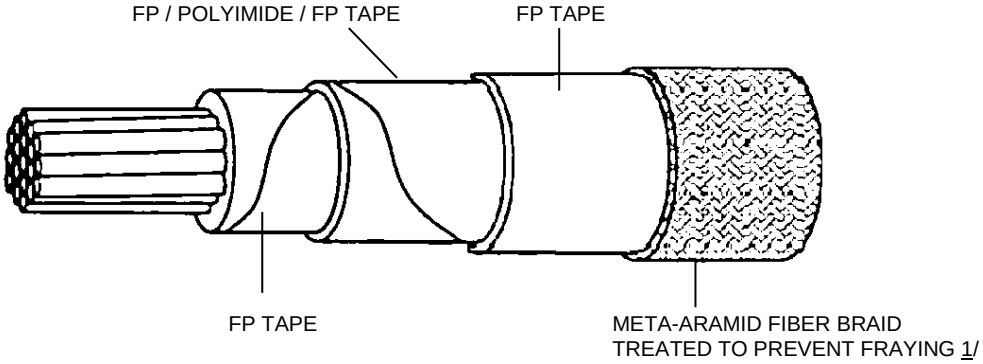

SIZE 8 THROUGH 6

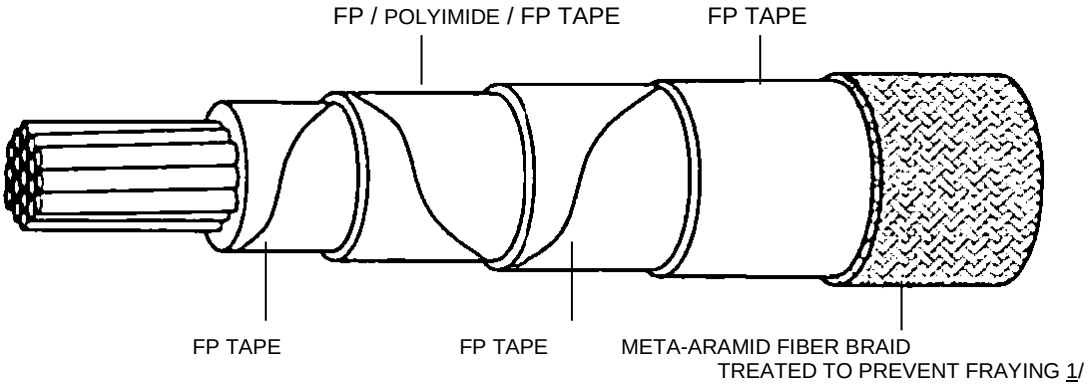

SIZE 4 THROUGH 04

FP – FLUOROCARBON POLYMER MODIFIED POLYTETRAFLUOROETHYLENE (PTFE)
CONDUCTOR – STRANDED NICKEL COATED COPPER

1/ BRAID: BRIGHT AROMATIC POLYAMIDE YARN, 200 DENIER, 100 FILAMENTS, TIGHTLY FORMED, UNIFORM IN APPEARANCE, TREATED WITH A CLEAR FINISHER COATING. THE FINISHER COATING SHALL BE COMPATIBLE WITH THE TEMPERATURE RATING AND PERFORMANCE REQUIREMENTS OF THE INSULATED WIRE. BRAID SHALL GRIP THE UNDERLYING INSULATION SUFFICIENTLY AS TO NOT SLIDE ALONG THE TAPE SURFACE DURING NORMAL HANDLING.

FIGURE 1 - AS22759/184 CONFIGURATION

AVA Documents
Document Sharing Hub
Full document details: SAE AS22759_184B