REV. A

AS307™

FEDERAL SUPPLY CLASS

RATIONALE

THIS DOCUMENT HAS BEEN DETERMINED TO CONTAIN BASIC AND STABLE TECHNOLOGY WHICH IS NOT DYNAMIC IN NATURE.

STABILIZED NOTICE

THIS DOCUMENT HAS BEEN DECLARED "STABILIZED" BY THE SAE E-25 GENERAL STANDARDS FOR AEROSPACE AND PROPULSION SYSTEMS COMMITTEE AND WILL NO LONGER BE SUBJECTED TO PERIODIC REVIEWS FOR CURRENCY. USERS ARE RESPONSIBLE FOR VERIFYING REFERENCES AND CONTINUED SUITABILITY OF TECHNICAL REQUIREMENTS. NEWER TECHNOLOGY MAY EXIST.

SAE Technical Standards Board Rules provide that: "This report is published by SAE to advance the state of technical and engineering sciences. The use of this report is entirely voluntary, and its applicability and suitability for any particular use, including any patent infringement arising therefrom, is the sole responsibility of the user."

SAE reviews each technical report at least every five years at which time it may be revised, reaffirmed, stabilized, or cancelled. SAE invites your written comments and suggestions.

ISSUED 1946-01 REAFFIRMED 2012-11 STABILIZED 2018-06

SAE values your input. To provide feedback on this Technical Report, please visit http://standards.sae.org/AS307A

THIRD ANGLE PROJECTION

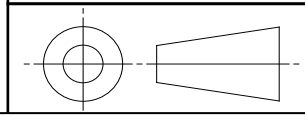

CUSTODIAN: E-25

PROCUREMENT SPECIFICATION: NONE

SAE INTERNATIONAL

AEROSPACE STANDARD

COVER, FLIGHT - GOVERNOR MOUNTING PAD

AS307™

REV. A

Copyright © 2018 SAE International
All rights reserved. No part of this publication may be reproduced, stored in a retrieval system or transmitted, in any form or by any means, electronic, mechanical, photocopying, recording, or otherwise, without the prior written permission of SAE.

TO PLACE A DOCUMENT ORDER: **Tel: 877-606-7323 (inside USA and Canada)** **Tel: +1 724-776-4970 (outside USA)**
Fax: 724-776-0790 **Email: CustomerService@sae.org** **SAE WEB ADDRESS: http://www.sae.org**

AVA Document Sharing Hub

Full document details: SAE AS307A

PART NUMBER AS 307-1

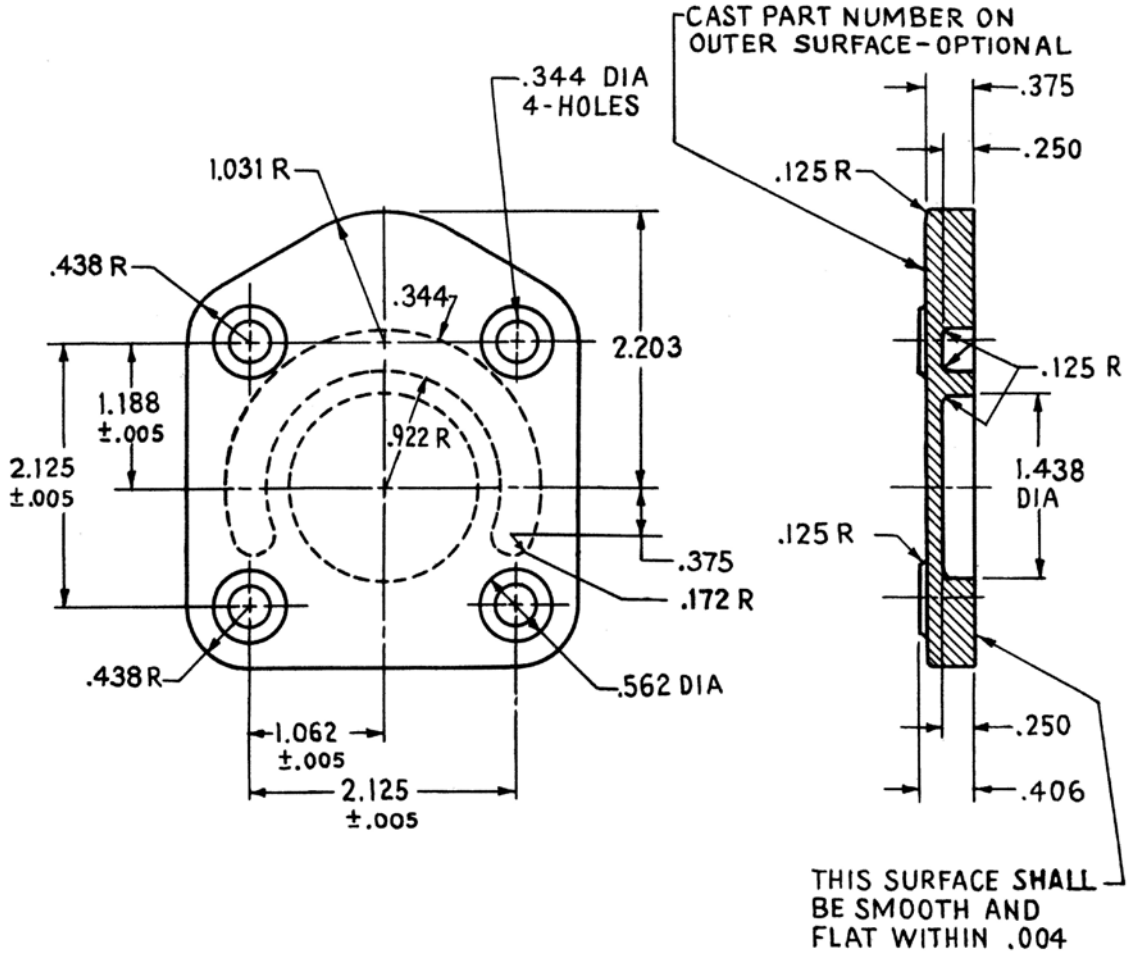

MATERIAL-ALUMINUM-AMS 4290 OR AMS 4280
BREAK SHARP EDGES .003-.015
CASTING TO BE FURNISHED WITH A COMMERCIALLY CLEANED PARTING LINE PAINT PER AMS 2510

UNLESS OTHERWISE SPECIFIED	
ALLOWABLE TOLERANCE ON:	
FINISHED DIM IS	±.010
ANGULAR DIM IS	± 2°
CASTING DIM IS	±.030

AVA Documents
Document Sharing Hub
Full document details: SAE AS307A