FEDERAL SUPPLY CLASS
5935

RATIONALE

LIMITED SCOPE BALLOT REQUIRED TO CORRECT MIL-DTL-17 CABLE PART NUMBERS.

NOTICE

THE COMPLETE REQUIREMENTS FOR PROCURING THE PRODUCT DESCRIBED HEREIN SHALL CONSIST OF THIS DOCUMENT AND THE LATEST ISSUE OF AS39029.

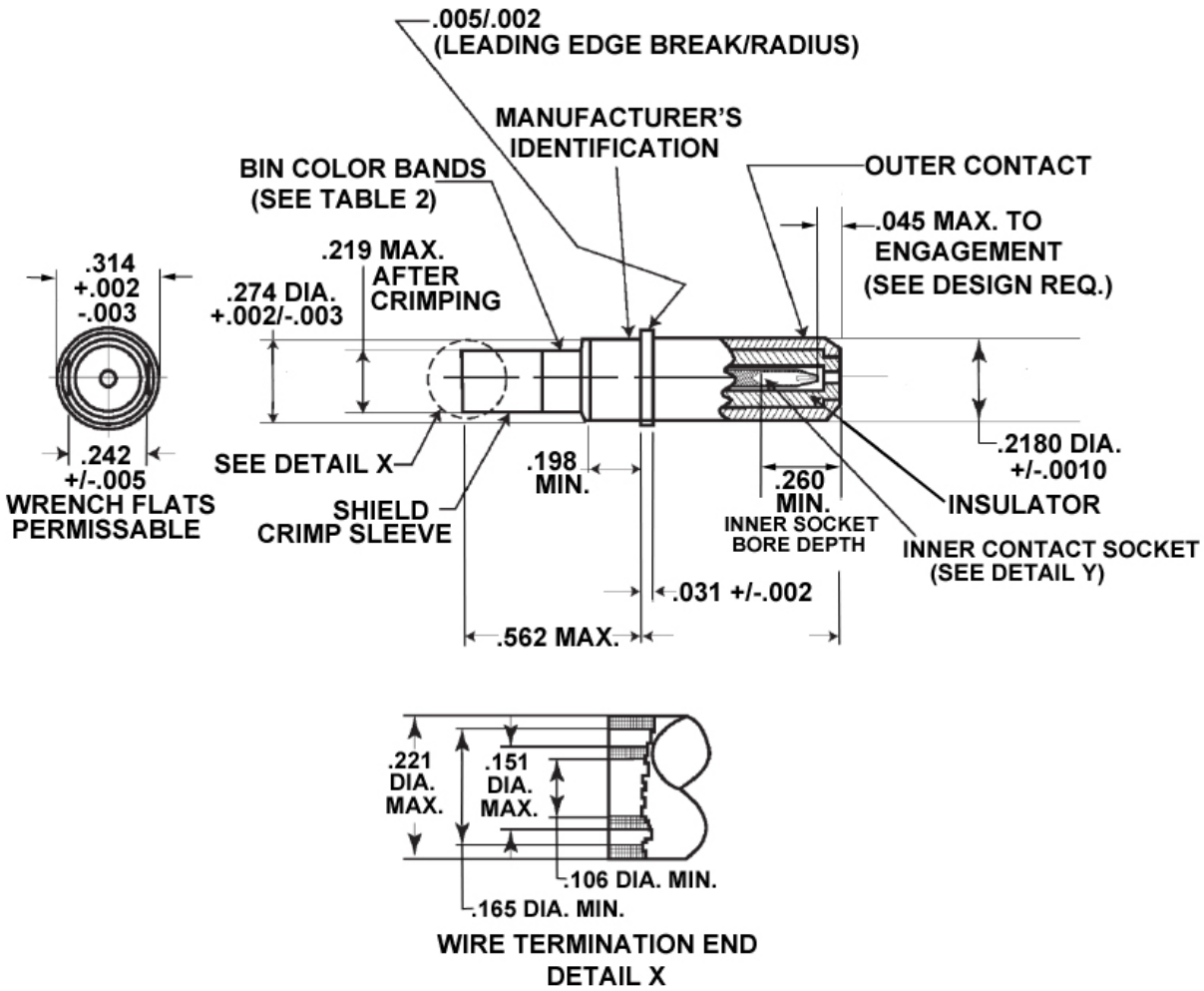

FIGURE 1 - CONNECTOR CONTACT

For more information on this standard, visit
https://www.sae.org/standards/content/AS39029/60C/

THIRD ANGLE PROJECTION

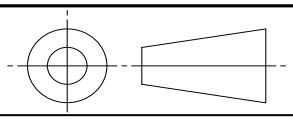

ISSUED 2000-07 REAFFIRMED 2021-07 REVISED 2022-09

CUSTODIAN: AE-8/AE-8C1

PROCUREMENT SPECIFICATION: AS39029

SAE INTERNATIONAL

AEROSPACE STANDARD

CONTACTS, ELECTRICAL CONNECTOR, PIN, CRIMP REMOVABLE, SHIELDED, SIZE 8
(FOR MIL-DTL-38999 SERIES I, III, AND IV CONNECTORS)

AS39029™/60
SHEET 1 OF 6

REV. C

SAE Executive Standards Committee Rules provide that: " This report is published by SAE to advance the state of technical and engineering sciences. The use of this report is entirely voluntary, and its applicability and suitability for any particular use, including any patent infringement arising therefrom, is the sole responsibility of the user."

SAE reviews each technical report at least every five years at which time it may be revised, reaffirmed, stabilized, or cancelled. SAE invites your written comments and suggestions.

Copyright © 2022 SAE International
All rights reserved. No part of this publication may be reproduced, stored in a retrieval system or transmitted, in any form or by any means, electronic, mechanical, photocopying, recording, or otherwise, without the prior written permission of SAE.
TO PLACE A DOCUMENT ORDER: Tel: 877-606-7323 (inside USA and Canada) Tel: +1 724-776-4970 (outside USA) Fax: 724-776-0790 Email: CustomerService@sae.org SAE WEB ADDRESS: http://www.sae.org

Documents
Document Sharing Hub

Full document details: SAE AS39029_60C

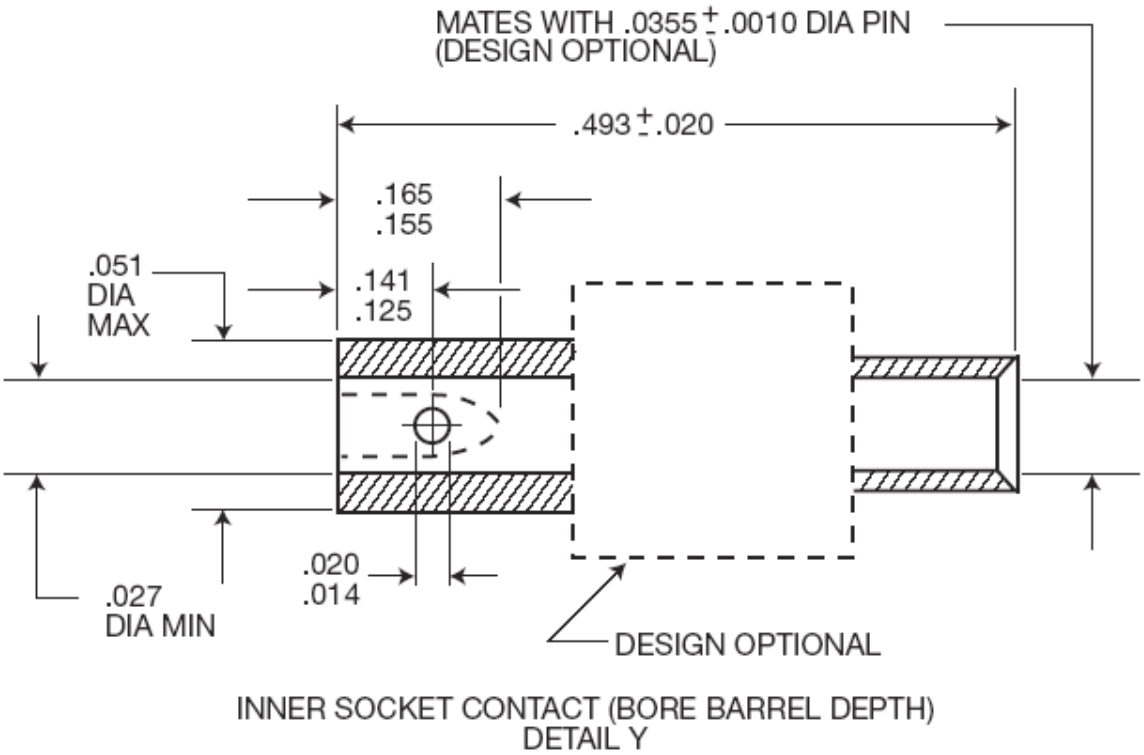

FIGURE 1 - CONNECTOR CONTACT (CONTINUED)

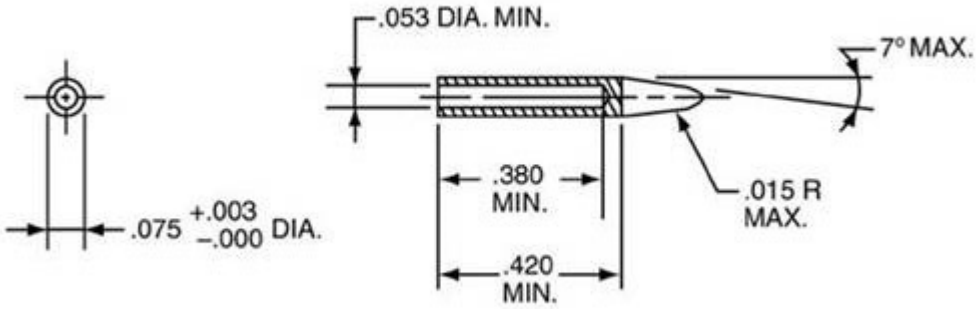

FIGURE 2 - INSULATOR EXPANDER TOOL

AVA Documents
Document Sharing Hub
Full document details: SAE AS39029_60C