FEDERAL SUPPLY CLASS
4730

RATIONALE

OPTION FOR NUTS WITH SAFETY WIRE HOLES ADDED. “NOT RECOMMENDED IN PART” NOTE ADDED TO SHEET 1. MATERIAL AND FINISH SPECIFIC SPECS ADDED TO NUT AND WIRE ENSURING “LIKE MATERIALS” ARE USED ON FITTING ASSEMBLY. TABLE 1B ADDED TO REFLECT WEIGHTS FOR TITANIUM FITTINGS. WEIGHTS WERE PREVIOUSLY SPECIFIED AS MAXIMUM WEIGHTS. OPTIONAL MATERIAL CODES R, T, AND W ADDED. PROCUREMENT SPECIFICATION NOTE REVISED TO INCLUDE “USER TO CONTROL SOURCE OF SUPPLY.” NOTE /6/ STATING “COMPONENTS OF LIKE MATERIAL SHALL BE ASSEMBLED ON BODY” REMOVED (SPECIFIC MATERIALS ARE NOW SPECIFIED ON THIS STANDARD) AND REPLACED BY INVENTORY DISPOSITION NOTE. ALLOWANCE FOR FORGED SURFACES TO BE 250 MICROINCHES ADDED TO NOTE 10. OPTION FOR NUTS WITH SAFETY WIRE HOLES ADDED. RECOMMENDED MATERIAL REPLACEMENT NOTE /16/ ADDED. REVISION INDICATOR NOTE 17 ADDED.

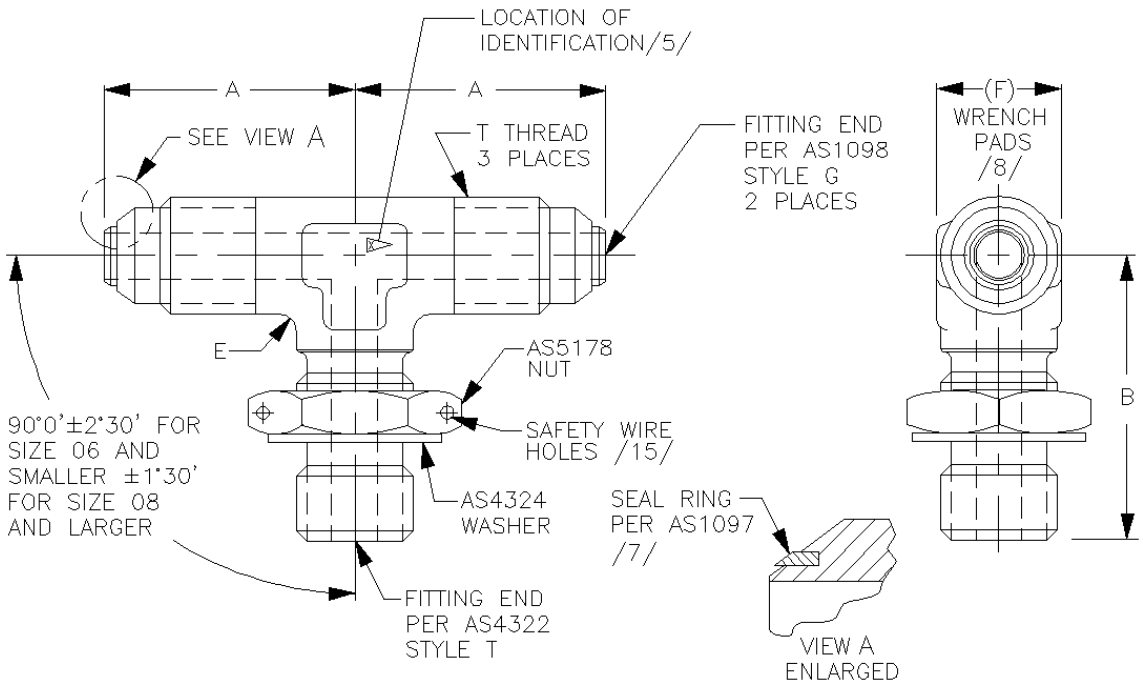

FIGURE 1 - TEE ASSEMBLY, FLARED TUBE, ADJUSTABLE END ON SIDE

NOT RECOMMENDED IN PART /16/

For more information on this standard, visit
https://www.sae.org/standards/content/AS4306A/

THIRD ANGLE PROJECTION

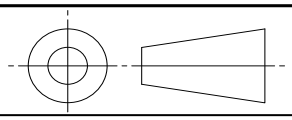

ISSUED 1993-08 REAFFIRMED 2015-04 REVISED 2025-05

CUSTODIAN: G-3/G-3B

PROCUREMENT SPECIFICATION: KSC-F-124 /4/

SAE INTERNATIONAL

AEROSPACE STANDARD

(R) TEE ASSEMBLY, FLARED TUBE, ADJUSTABLE END ON SIDE, FOR SEAL RING

AS4306™
SHEET 1 OF 4

REV. A

SAE Executive Standards Committee Rules provide that: “ This report is published by SAE to advance the state of technical and engineering sciences. The use of this report is entirely voluntary, and its applicability and suitability for any particular use, including any patent infringement arising therefrom, is the sole responsibility of the user.”

SAE reviews each technical report at least every five years at which time it may be revised, reaffirmed, stabilized, or cancelled. SAE invites your written comments and suggestions.

Copyright © 2025 SAE International
All rights reserved. No part of this publication may be reproduced, stored in a retrieval system, transmitted, in any form or by any means, electronic, mechanical, photocopying, recording, or otherwise, or used for text and data mining, AI training, or similar technologies, without the prior written permission of SAE.

TO PLACE A DOCUMENT ORDER: **Tel: 877-606-7323 (inside USA and Canada)** **Tel: +1 724-776-4970 (outside USA)**
Fax: 724-776-0790 **Email: CustomerService@sae.org** **SAE WEB ADDRESS: http://www.sae.org**

Document Sharing Hub

Full document details: SAE AS4306A

TABLE 1 - DIMENSIONS A-F

BASIC NUMBER AS4306 /14/ SIZE CODE	(NOMINAL TUBE SIZE)	T THREAD PER AS8879 CLASS 3A	A +.000 -.063	B +.000 -.063	E ±.030	F
04	.250	.4375-20 UNJF	.906	1.063	.063	.438
06	.375	. 5625-18 UNJF	1.078	1.281	.094	.563
08	.500	.7500-16 UNJF	1.266	1.485	.094	.750
10	.625	.8750-14 UNJF	1.469	1.735	.125	.875
12	.750	1.0625-12 UNJ	1.672	1.969	.125	1.063
16	1.000	1.3125-12 UNJ	1.828	2.078	.125	1.313
20	1.250	1.6250-12 UNJ	2.078	2.281	.125	1.625
24	1.500	1.8750-12 UNJ	2.344	2.422	.125	1.875
28	1.750	2.2500-12 UNJ	2.828	2.813	.125	2.250
32	2.000	2.5000-12 UNJ	3.078	2.922	.188	2.500

TABLE 1B - WEIGHTS

BASIC NUMBER AS4306 /14/ SIZE CODE	(NOMINAL TUBE SIZE)	LB/EA APPROX REF ALUM	LB/EA APPROX REF CRES	LB/EA APPROX REF TITANIUM
04	.250	.0410	.114	.061
06	.375	.0668	.185	.100
08	.500	.135	.373	.202
10	.625	.201	.556	.301
12	.750	.325	.902	.486
16	1.000	.457	1.270	.683
20	1.250	.736	2.040	1.101
24	1.500	.974	2.700	1.456
28	1.750	1.100	3.060	1.645
32	2.000	1.290	3.590	1.929

NOTES:

/1/ MATERIAL:

a. CODE LETTER D: /16/

(1) BODY: TYPE 2014-T6 ALUMINUM ALLOY FORGING PER AMS-QQ-A-367 OR AMS4133; OR 2024-T6 ALUMINUM ALLOY BAR PER AMS-QQ-A-225/6; OR 2024-T851 ALUMINUM ALLOY BAR PER AMS-QQ-A-225/6 OR AMS4339.

(2) NUT: MATERIAL CODE LETTER D OF AS5178 (TYPE 2024 ALUMINUM ALLOY).

(3) WASHER: MATERIAL CODE LETTER D OF AS4324 (TYPE 2024 ALUMINUM ALLOY).

b. CODE LETTER J:

(1) BODY: TYPE 304 CORROSION-RESISTANT STEEL FORGING OR BAR PER AMS-QQ-S-763 OR AMS5639.

(2) NUT: MATERIAL CODE LETTER J OF AS5178 (TYPE 304 CORROSION-RESISTANT STEEL).

(3) WASHER: MATERIAL CODE LETTER J OF AS4324 (TYPE 302 OR 304 CORROSION-RESISTANT STEEL).

AVA Documents Document Sharing Hub

Full document details: SAE AS4306A