REV. A

AS4590™

FEDERAL SUPPLY CLASS
4720

RATIONALE

THIS DOCUMENT HAS BEEN DETERMINED TO CONTAIN BASIC AND STABLE TECHNOLOGY WHICH IS NOT DYNAMIC IN NATURE.

STABILIZED NOTICE

THIS DOCUMENT HAS BEEN DECLARED "STABILIZED" BY THE SAE G-3, AEROSPACE COUPLINGS, FITTINGS, HOSE, TUBING ASSEMBLIES COMMITTEE AND WILL NO LONGER BE SUBJECTED TO PERIODIC REVIEWS FOR CURRENCY. USERS ARE RESPONSIBLE FOR VERIFYING REFERENCES AND CONTINUED SUITABILITY OF TECHNICAL REQUIREMENTS. NEWER TECHNOLOGY MAY EXIST.

ISSUED 2001-03 REAFFIRMED 2015-04 STABILIZED 2018-02

SAE values your input. To provide feedback on this Technical Report, please visit http://standards.sae.org/AS4590A

THIRD ANGLE PROJECTION

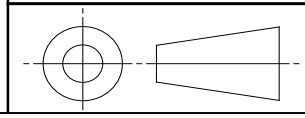

CUSTODIAN: G-3/G-3D

PROCUREMENT SPECIFICATION: AS1975 /2/

AEROSPACE STANDARD

HOSE ASSEMBLY, PTFE, PARA-ARAMID REINFORCED, STANDARD DUTY, 4000 PSI, 275 °F, TITANIUM FITTINGS, BEAM SEAL, 45º TO 90º

AS4590™

REV. A

SAE Technical Standards Board Rules provide that: "This report is published by SAE to advance the state of technical and engineering sciences. The use of this report is entirely voluntary, and its applicability and suitability for any particular use, including any patent infringement arising therefrom, is the sole responsibility of the user."

SAE reviews each technical report at least every five years at which time it may be revised, reaffirmed, stabilized, or cancelled. SAE invites your written comments and suggestions.

Copyright © 2018 SAE International
All rights reserved. No part of this publication may be reproduced, stored in a retrieval system or transmitted, in any form or by any means, electronic, mechanical, photocopying, recording, or otherwise, without the prior written permission of SAE.

TO PLACE A DOCUMENT ORDER: **Tel: 877-606-7323 (inside USA and Canada)** **Tel: +1 724-776-4970 (outside USA)**
Fax: 724-776-0790 **Email: CustomerService@sae.org** **SAE WEB ADDRESS: http://www.sae.org**

Documents Document Sharing Hub
Full document details: SAE AS4590A

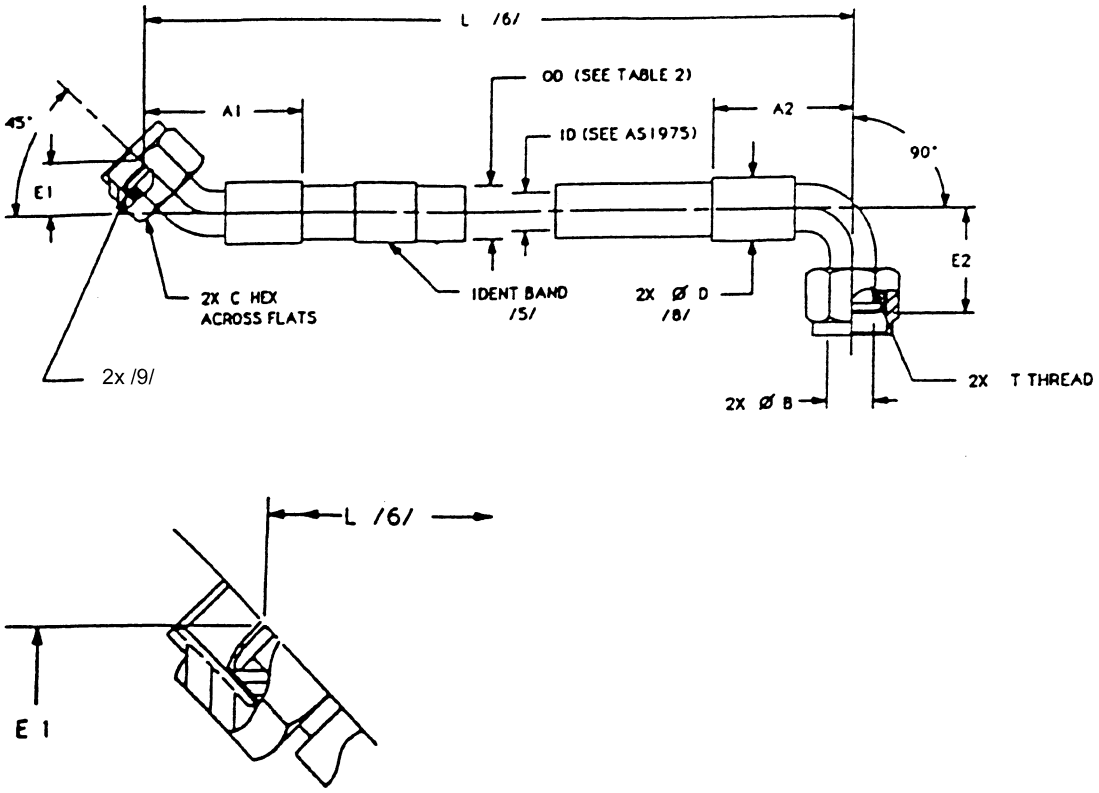

FIGURE 1 - ENLARGED VIEW - 45° END FITTING

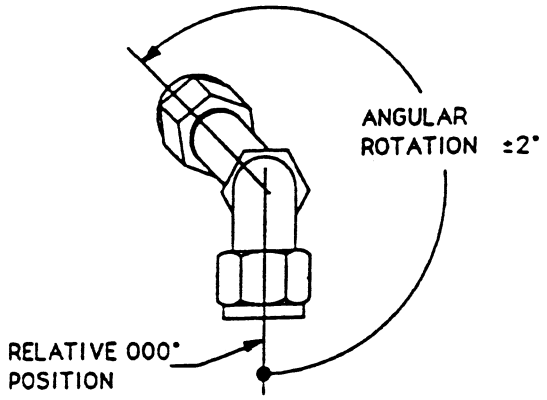

FIGURE 2 - ASSEMBLY ORIENTATION

AVA Documents
Document Sharing Hub
Full document details: SAE AS4590A

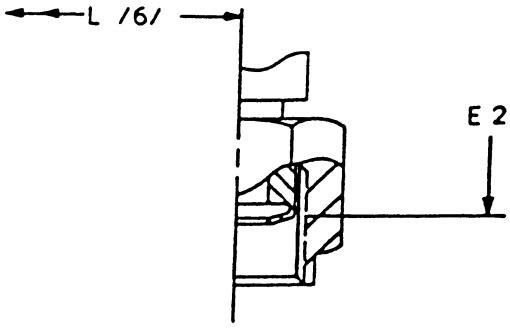

FIGURE 3 - ENLARGED VIEW - 90° END FITTING

Documents
Document Sharing Hub

Full document details: SAE AS4590A