FEDERAL SUPPLY CLASS
4720

RATIONALE

AS4624D HAS BEEN REAFFIRMED TO COMPLY WITH THE SAE FIVE-YEAR REVIEW POLICY.

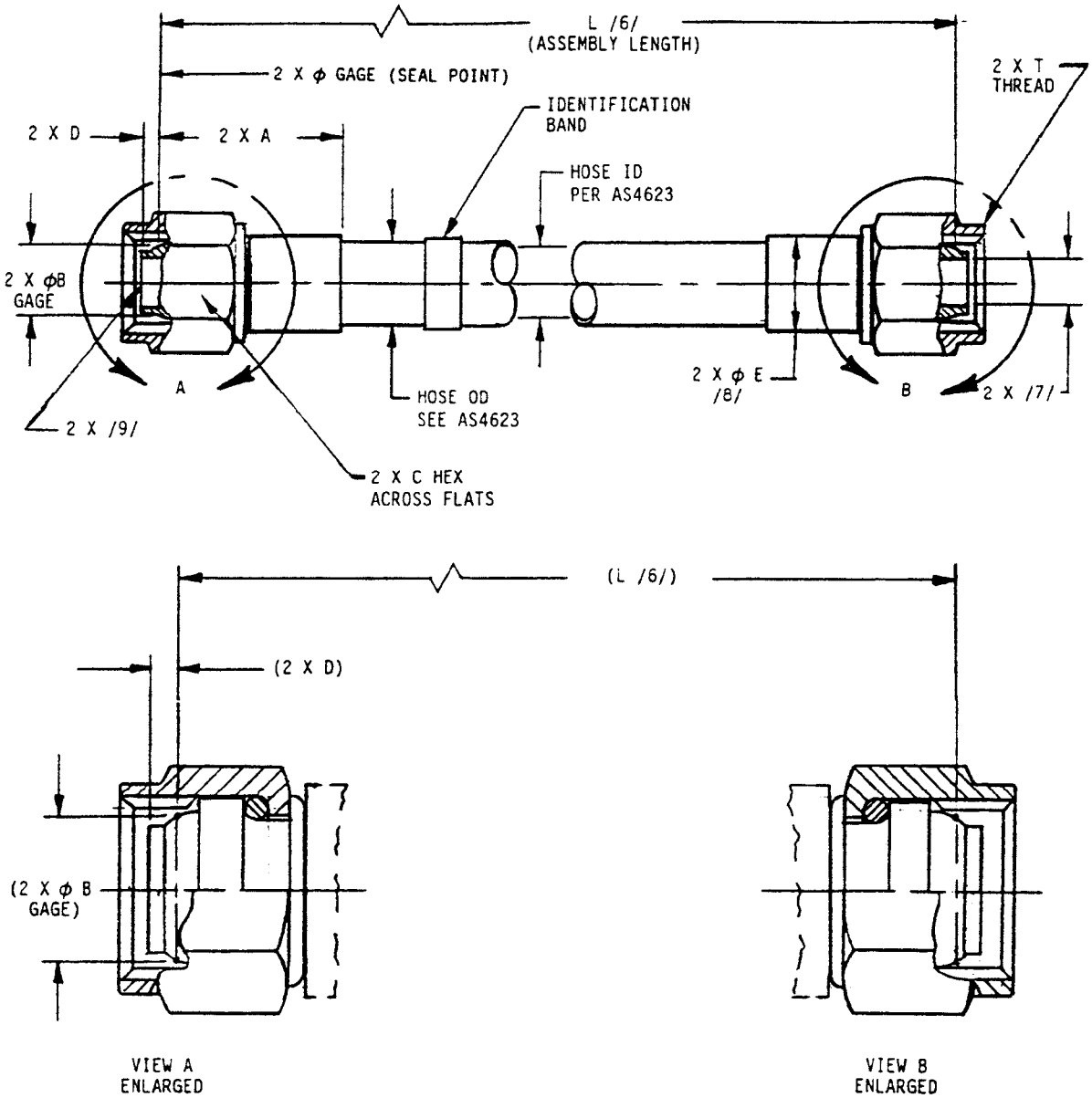

FIGURE 1 - FLARELESS HOSE ASSEMBLY, STRAIGHT TO STRAIGHT

SAE values your input. To provide feedback on this Technical Report, please visit http://www.sae.org/technical/standards/AS4624D

THIRD ANGLE PROJECTION

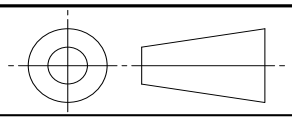

ISSUED 1992-06 REVISED 2009-07 REAFFIRMED 2015-04

CUSTODIAN: G-3/G-3D

PROCUREMENT SPECIFICATION: /2/ AS4623

SAE INTERNATIONAL

AEROSPACE STANDARD

HOSE ASSEMBLY, POLYTETRAFLUOROETHYLENE, PARA ARAMID REINFORCED, HEAVY-DUTY, 275 °F, 3000 PSI FLARELESS TITANIUM FITTINGS, INCLUDING JUMP SIZE, STRAIGHT TO STRAIGHT

AS4624
SHEET 1 OF 6

REV. D

SAE Technical Standards Board Rules provide that: "This report is published by SAE to advance the state of technical and engineering sciences. The use of this report is entirely voluntary, and its applicability and suitability for any particular use, including any patent infringement arising therefrom, is the sole responsibility of the user."

SAE reviews each technical report at least every five years at which time it may be revised, reaffirmed, stabilized, or cancelled. SAE invites your written comments and suggestions.

Copyright 2015 SAE International
All rights reserved. No part of this publication may be reproduced, stored in a retrieval system or transmitted, in any form or by any means, electronic, mechanical, photocopying, recording, or otherwise, without the prior written permission of SAE.

TO PLACE A DOCUMENT ORDER: **Tel: 877-606-7323 (inside USA and Canada)** **Tel: +1 724-776-4970 (outside USA)**
Fax: 724-776-0790 **Email: CustomerService@sae.org** **SAE WEB ADDRESS: http://www.sae.org**

Documents Document Sharing Hub
Full document details: SAE AS4624D

TABLE 1 – HOSE AND FITTING DIMENSIONS

BASIC HOSE ASSEMBLY NO. AS4624 SIZE CODE	SIZE	/14/ FITTING TYPE	THREAD T PER AS8879	A MAX	Ø B GAGE BASIC	C HEX	D	E Ø/8/ MAX	BALL SIZE MIN THRU /7/ IN
E	0.250	--	--	--	--	--	--	--	--
E	0.250	S	0.4375-20UNJF-3B	1.630	0.2930	0.56	0.16	0.69	0.108
E	0.250	E	0.5625-18UNJF-3B	1.695	0.4120	0.69	0.16	0.69	0.108
G	0.375	R	0.4375-20UNJF-3B	1.740	0.2930	0.56	0.16	0.80	0.108
G	0.375	S	0.5625-18UNJF-3B	1.835	0.4120	0.69	0.16	0.80	0.184
G	0.375	E	0.7500-16UNJF-3B	1.930	0.5600	0.88	0.19	0.80	0.184
H	0.500	R	0.5625-18UNJF-3B	2.145	0.4120	0.69	0.16	0.97	0.184
H	0.500	S	0.7500-16UNJF-3B	2.165	0.5600	0.88	0.19	0.97	0.283
H	0.500	E	0.8750-14UNJF-3B	2.675	0.6730	1.00	0.20	0.97	0.283
J	0.625	R	0.7500-16UNJF-3B	2.860	0.5600	0.88	0.19	1.15	0.283
J	0.625	S	0.8750-14UNJF-3B	2.905	0.6730	1.00	0.20	1.15	0.342
J	0.625	E	1.0625-12UNJ-3B	2.920	0.8100	1.25	0.23	1.15	0.342
K	0.750	R	0.8750-14UNJF-3B	3.240	0.6730	1.00	0.20	1.38	0.342
K	0.750	S	1.0625-12UNJ-3B	3.205	0.8100	1.25	0.23	1.38	0.459
K	0.750	E	1.3125-12UNJ-3B	3.320	1.0620	1.50	0.30	1.38	0.459
M	1.000	R	1.0625-12UNJ-3B	3.690	0.8100	1.25	0.23	1.66	0.459
M	1.000	S	1.3125-12UNJ-3B	3.740	1.0620	1.50	0.30	1.66	0.684
M	1.000	E	1.5625-12UNJ-3B	3.570	1.3160	1.81	0.04	1.66	0.684
N	1.250	--	--	--	--	--	--	--	--
N	1.250	S	1.5625-12UNJ-3B	4.330	1.3160	1.81	0.04	2.32	0.832
N	1.250	--	--	--	--	--	--	--	--

Full document details: SAE AS4624D
AVA Document Sharing Hub