FEDERAL SUPPLY CLASS
4720

RATIONALE

AS4626D HAS BEEN REAFFIRMED TO COMPLY WITH THE SAE FIVE-YEAR REVIEW POLICY.

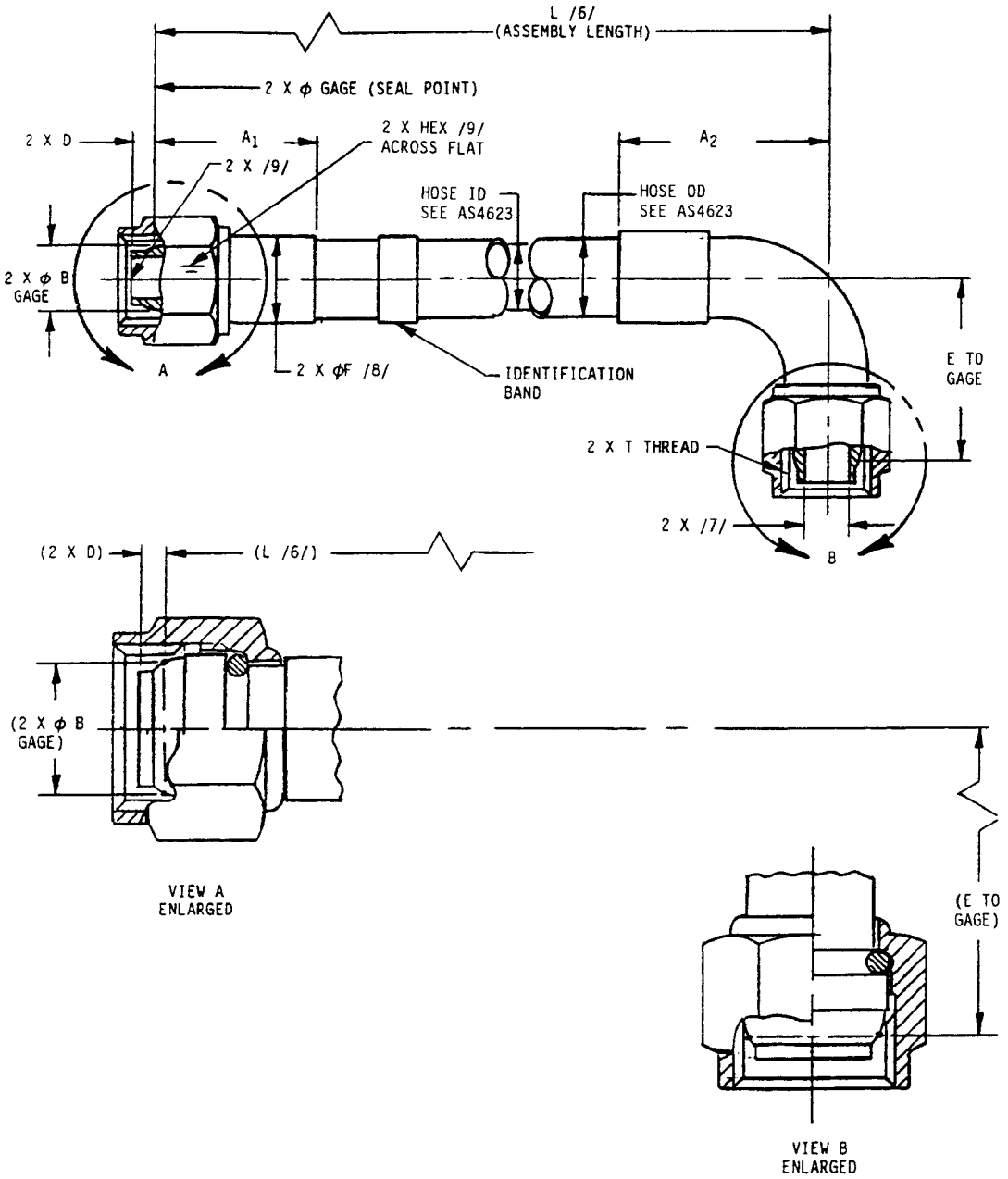


FIGURE 1 - FLARELESS HOSE ASSEMBLY
STRAIGHT TO 90° ELBOW

**SAE values your input. To provide feedback on this Technical Report, please visit http://www.sae.org/technical/standards/AS4626D**

THIRD ANGLE PROJECTION

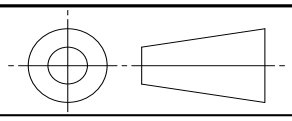

ISSUED 1992-06 REVISED 2009-07 REAFFIRMED 2015-04

CUSTODIAN: G-3/G-3D

PROCUREMENT SPECIFICATION: /2/ AS4623

# AEROSPACE STANDARD

HOSE ASSEMBLY, POLYTETRAFLUOROETHYLENE, PARA ARAMID
REINFORCED, HEAVY-DUTY, 275 ºF, 3000 PSI FLARELESS
TITANIUM FITTINGS, INCLUDING JUMP SIZE, STRAIGHT TO 90º

**AS4626**
SHEET 1 OF 6

**REV. D**

SAE Technical Standards Board Rules provide that: "This report is published by SAE to advance the state of technical and engineering sciences. The use of this report is entirely voluntary, and its applicability and suitability for any particular use, including any patent infringement arising therefrom, is the sole responsibility of the user."

SAE reviews each technical report at least every five years at which time it may be revised, reaffirmed, stabilized, or cancelled. SAE invites your written comments and suggestions.

Copyright 2015 SAE International
All rights reserved. No part of this publication may be reproduced, stored in a retrieval system or transmitted, in any form or by any means, electronic, mechanical, photocopying, recording, or otherwise, without the prior written permission of SAE.

**TO PLACE A DOCUMENT ORDER:** **Tel: 877-606-7323 (inside USA and Canada)** **Tel: +1 724-776-4970 (outside USA)**
**Fax: 724-776-0790** **Email: CustomerService@sae.org** **SAE WEB ADDRESS: http://www.sae.org**

Documents Document Sharing Hub
Full document details: SAE AS4626D

TABLE 1 – HOSE AND FITTING DIMENSIONS

| BASIC HOSE ASSEMBLY NO. 4626 SIZE CODE | SIZE | /14/ FITTING TYPE | THREAD T PER AS8879 | $A_1$ MAX | $A_2$ MAX | B GAGE BASIC | (C) HEX | D | E MAX | E MIN | F MAX | BALL SIZE MIN THRU /7/ IN |
|---|---|---|---|---|---|---|---|---|---|---|---|---|
| E | 0.250 | -- | -- | -- | -- | -- | -- | -- | -- | -- | -- | -- |
| E | 0.250 | S | 0.4375-20UNJF-3B | 1.630 | 1.880 | 0.2930 | 0.56 | 0.16 | 0.770 | 0.645 | 0.69 | 0.102 |
| E | 0.250 | E | 0.5625-18UNJF-3B | 1.695 | 1.960 | 0.4120 | 0.69 | 0.16 | 0.840 | 0.715 | 0.69 | 0.102 |
| G | 0.375 | R | 0.4375-20UNJF-3B | 1.740 | 2.180 | 0.2930 | 0.56 | 0.16 | 0.770 | 0.645 | 0.80 | 0.102 |
| G | 0.375 | S | 0.5625-18UNJF-3B | 1.835 | 2.180 | 0.4120 | 0.69 | 0.16 | 0.880 | 0.715 | 0.80 | 0.174 |
| G | 0.375 | E | 0.7500-16UNJF-3B | 1.930 | 2.538 | 0.5600 | 0.88 | 0.19 | 0.970 | 0.845 | 0.80 | 0.174 |
| H | 0.500 | R | 0.5625-18UNJF-3B | 2.145 | 2.538 | 0.4120 | 0.69 | 0.16 | 0.880 | 0.715 | 0.97 | 0.174 |
| H | 0.500 | S | 0.7500-16UNJF-3B | 2.165 | 2.538 | 0.5600 | 0.88 | 0.19 | 0.970 | 0.845 | 0.97 | 0.267 |
| H | 0.500 | E | 0.8750-14UNJF-3B | 2.675 | 2.780 | 0.6730 | 1.00 | 0.20 | 1.210 | 1.085 | 0.97 | 0.267 |
| J | 0.625 | R | 0.7500-16UNJF-3B | 2.860 | 3.375 | 0.5600 | 0.88 | 0.19 | 0.970 | 0.845 | 1.15 | 0.267 |
| J | 0.625 | S | 0.8750-14UNJF-3B | 2.905 | 3.375 | 0.6730 | 1.00 | 0.20 | 1.210 | 1.085 | 1.15 | 0.323 |
| J | 0.625 | E | 1.0625-14UNJ-3B | 2.920 | 3.665 | 0.8100 | 1.25 | 0.23 | 1.400 | 1.275 | 1.15 | 0.323 |
| K | 0.750 | R | 0.8750-14UNJF-3B | 2.240 | 3.940 | 0.6730 | 1.00 | 0.20 | 1.210 | 1.085 | 1.38 | 0.323 |
| K | 0.750 | S | 1.0625-12UNJ-3B | 3.205 | 3.940 | 0.8100 | 1.25 | 0.23 | 1.400 | 1.275 | 1.38 | 0.433 |
| K | 0.750 | E | 1.3125-12UNJ-3B | 3.320 | 4.110 | 1.0620 | 1.50 | 0.30 | 1.625 | 1.500 | 1.38 | 0.433 |
| M | 1.000 | R | 1.0625-12UNJ-3B | 3.690 | 4.510 | 0.8100 | 1.25 | 0.23 | 1.400 | 1.275 | 1.66 | 0.433 |
| M | 1.000 | S | 1.3125-12UNJ-3B | 3.740 | 4.510 | 1.0620 | 1.50 | 0.30 | 1.625 | 1.500 | 1.66 | 0.646 |
| M | 1.000 | E | 1.5625-12UNJ-3B | 3.570 | 4.740 | 1.3160 | 1.81 | 0.04 | 1.825 | 1.700 | 1.66 | 0.646 |
| N | 1.250 | -- | -- | -- | -- | -- | -- | -- | -- | -- | -- | -- |
| N | 1.250 | S | 1.5625-12UNJ-3B | 4.330 | 5.310 | 1.3160 | 1.81 | 0.04 | 1.825 | 1.700 | 2.32 | 0.786 |
| N | 1.250 | -- | -- | -- | -- | -- | -- | -- | -- | -- | -- | -- |

Full document details: SAE AS4626D
Document Sharing Hub