FEDERAL SUPPLY CLASS
4720

RATIONALE

AS4628D HAS BEEN REAFFIRMED TO COMPLY WITH THE SAE FIVE-YEAR REVIEW POLICY.

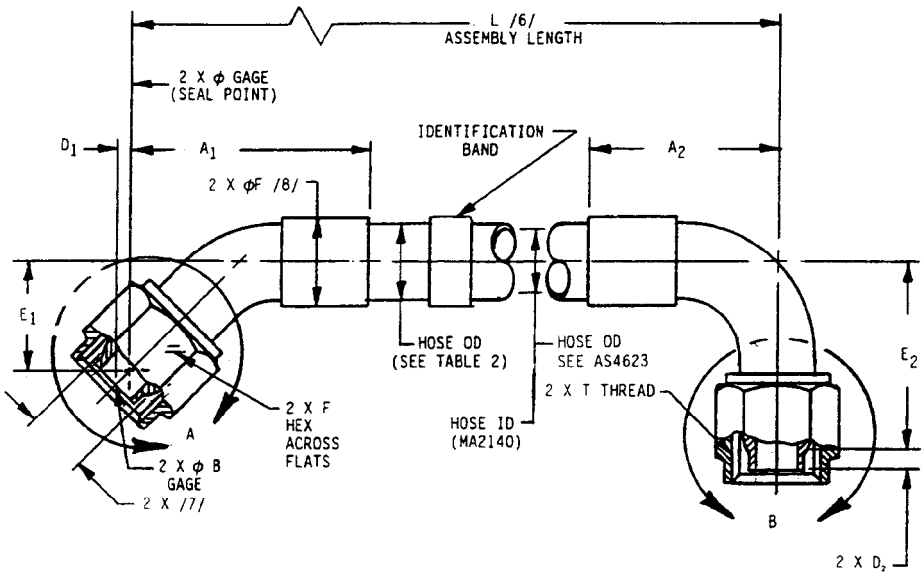

FIGURE 1 - HOSE ASSEMBLY, 45° ELBOW TO 90° ELBOW

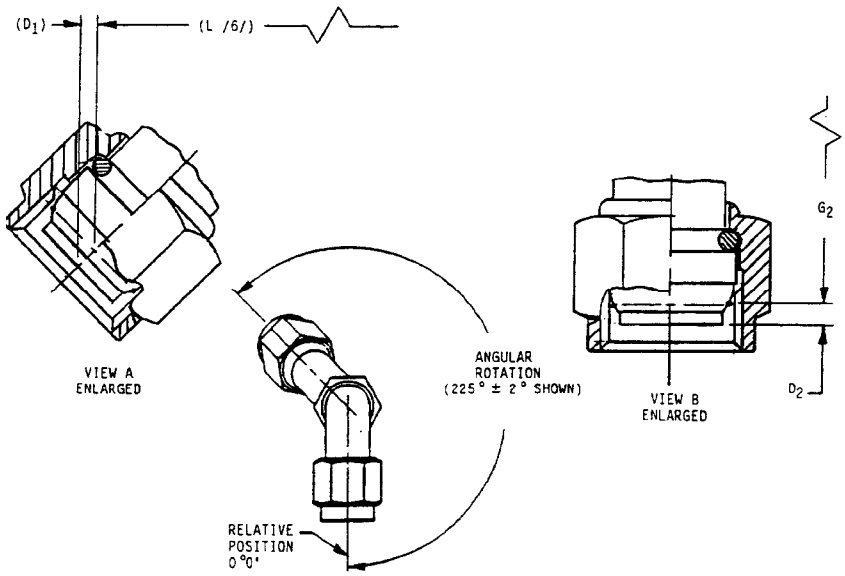

FIGURE 2 - FITTING ORIENTATION /19/

SAE values your input. To provide feedback on this Technical Report, please visit http://www.sae.org/technical/standards/AS4628D

THIRD ANGLE PROJECTION

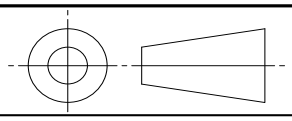

ISSUED 1992-06 REVISED 2009-07 REAFFIRMED 2015-04

CUSTODIAN: G-3/G-3D

PROCUREMENT SPECIFICATION: /2/ AS4623

SAE INTERNATIONAL

AEROSPACE STANDARD

HOSE ASSEMBLY, POLYTETRAFLUOROETHYLENE, PARA ARAMID REINFORCED, HEAVY-DUTY, 275 °F, 3000 PSI FLARELESS TITANIUM FITTINGS, INCLUDING JUMP SIZE, 45° TO 90°

AS4628
SHEET 1 OF 5

REV. D

SAE Technical Standards Board Rules provide that: "This report is published by SAE to advance the state of technical and engineering sciences. The use of this report is entirely voluntary, and its applicability and suitability for any particular use, including any patent infringement arising therefrom, is the sole responsibility of the user."

SAE reviews each technical report at least every five years at which time it may be revised, reaffirmed, stabilized, or cancelled. SAE invites your written comments and suggestions.

Copyright 2015 SAE International
All rights reserved. No part of this publication may be reproduced, stored in a retrieval system or transmitted, in any form or by any means, electronic, mechanical, photocopying, recording, or otherwise, without the prior written permission of SAE.
TO PLACE A DOCUMENT ORDER: Tel: 877-606-7323 (inside USA and Canada) Tel: +1 724-776-4970 (outside USA)
Fax: 724-776-0790 Email: CustomerService@sae.org SAE WEB ADDRESS: http://www.sae.org

Documents
Document Sharing Hub

Full document details: SAE AS4628D

TABLE 1 – HOSE AND FITTING DIMENSIONS

BASIC HOSE ASSEMBLY NO. 4628 SIZE CODE	SIZE	/14/ FITTING TYPE	THREAD T PER AS8879	A_1 MAX	A_2 MAX	B GAGE BASIC	(C) HEX	D_1	D_2	E_1 MAX	E_1 MIN	E_2 MAX	E_2 MIN	F MAX	BALL SIZE MIN THRU /7/ IN
E	0.250	S	0.4375-20UNJF-3B	2.160	1.180	0.2930	0.56	0.11	0.16	0.475	0.350	0.770	0.645	0.69	0.102
G	0.375	S	0.5625-18UNJF-3B	2.460	2.180	0.4120	0.69	0.12	0.16	0.500	0.375	0.840	0.715	0.80	0.174
H	0.500	S	0.7500-16UNJF-3B	2.740	2.538	0.5600	0.88	0.13	0.19	0.560	0.435	0.940	0.845	0.97	0.267
J	0.625	S	0.8750-14UNJF-3B	3.785	3.375	0.6730	1.00	0.14	0.20	0.670	0.545	1.210	1.085	1.15	0.323
K	0.750	S	1.0625-12UNJ-3B	4.810	3.940	0.8100	1.25	0.16	0.23	0.705	0.580	1.400	1.275	1.38	0.433
M	1.000	S	1.3125-12UNJ-3B	5.540	4.510	1.0620	1.50	0.21	0.30	0.840	0.715	1.625	1.500	1.66	0.646
N	1.250	S	1.5625-12UNJ-3B	6.770	5.310	1.3160	1.81	0.03	0.04	0.875	0.750	1.825	1.700	2.32	0.786

TABLE 2 – HOSE OR SLEEVE OUTSIDE DIAMETERS /10/

SLEEVE CODE	SLEEVE MATERIAL	TEMP LIMIT °F	HOSE SIZE 0.250	HOSE SIZE 0.375	HOSE SIZE 0.500	HOSE SIZE 0.625	HOSE SIZE 0.750	HOSE SIZE 1.000	HOSE SIZE 1.250
-	(-) INDICATES HOSE ONLY NO SLEEVE (SEE AS4623)	275	--	--	--	--	--	--	--
A	FIRESLEEVE (AS1072 SIL-FG) (5 MIN) /11/ /12/ /13/	275	0.930/0.730	1.070/0.880	1.205/1.015	1.370/1.130	1.590/1.380	1.847/1.677	2.130/1.950
B	ABRASION SLEEVE SHRINK-ON (POLYOLEFIN AS1073-CODE B) /20/	275	0.620/0.540	0.770/0.690	0.917/0.833	1.042/0.948	1.314/1.206	1.623/1.511	1.896/1.784
K	INTEGRAL ABRASION SLEEVE (BRAIDED) POLYESTER /21/	275	0.555/0.635	0.675/0.755	0.840/0.920	0.935/1.025	1.205/1.305	1.502/1.602	1.775/1.875

Full document details: SAE AS4628D
Document Sharing Hub