FEDERAL SUPPLY CLASS
4730

RATIONALE

ADDED CONDUCTIVE HIGH PURITY ALUMINUM COATING FOR ALUMINUM ALLOY FITTINGS.

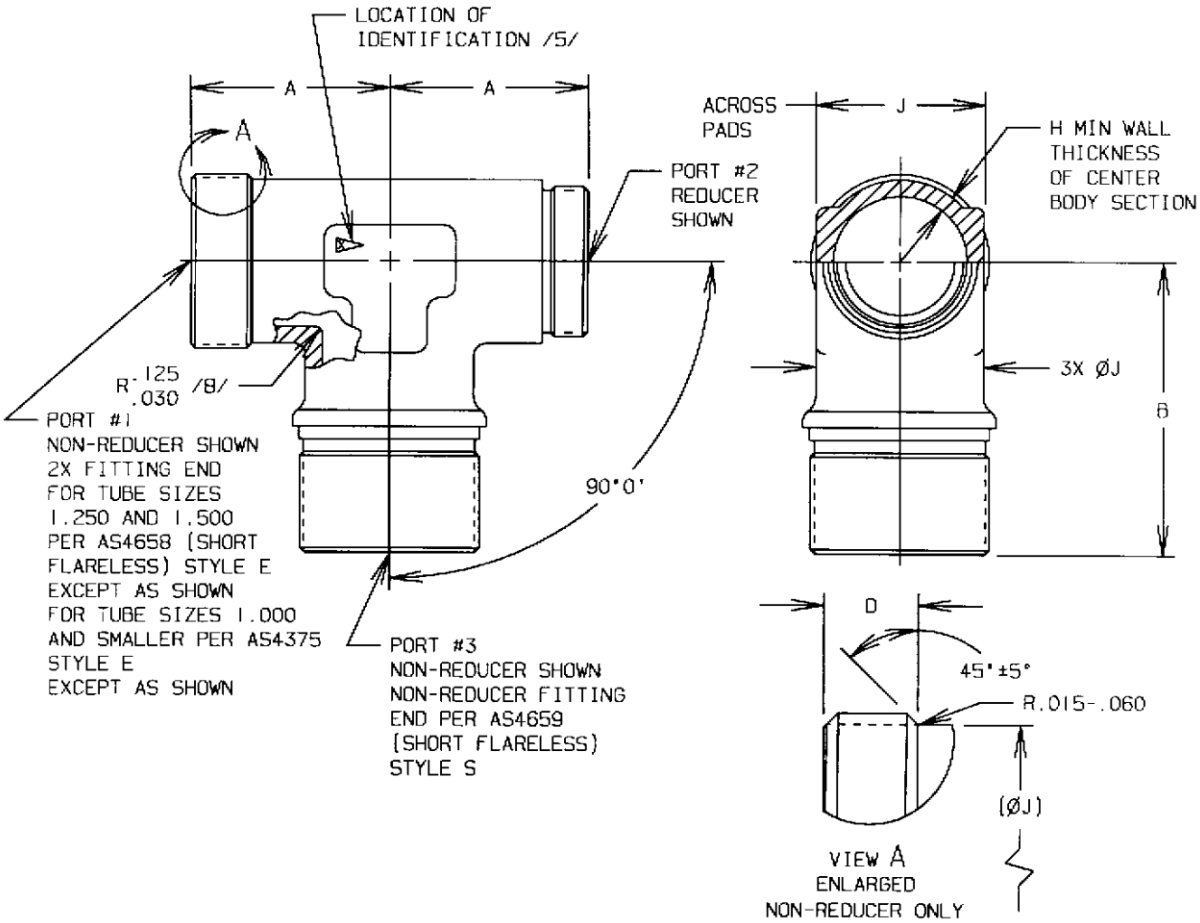

FIGURE 1 - FITTING, TEE, REDUCER

SAE values your input. To provide feedback on this Technical Report, please visit http://standards.sae.org/AS4690D

THIRD ANGLE PROJECTION

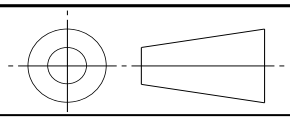

ISSUED 1992-07 REAFFIRMED 2007-07 REVISED 2017-08

CUSTODIAN: G-3/G-3B

PROCUREMENT SPECIFICATION: AS18280 /4/

SAE INTERNATIONAL

AEROSPACE STANDARD

FITTING, TEE, REDUCER,
BULKHEAD ON SIDE,
FLARELESS AND SHORT FLARELESS

AS4690™
SHEET 1 OF 7

REV. D

SAE Technical Standards Board Rules provide that: "This report is published by SAE to advance the state of technical and engineering sciences. The use of this report is entirely voluntary, and its applicability and suitability for any particular use, including any patent infringement arising therefrom, is the sole responsibility of the user."

SAE reviews each technical report at least every five years at which time it may be revised, reaffirmed, stabilized, or cancelled. SAE invites your written comments and suggestions.

Copyright © 2017 SAE International
All rights reserved. No part of this publication may be reproduced, stored in a retrieval system or transmitted, in any form or by any means, electronic, mechanical, photocopying, recording, or otherwise, without the prior written permission of SAE.

TO PLACE A DOCUMENT ORDER: **Tel: 877-606-7323 (inside USA and Canada)** **Fax: 724-776-0790** **Tel: +1 724-776-4970 (outside USA)** **Email: CustomerService@sae.org** **SAE WEB ADDRESS: http://www.sae.org**

Documents Document Sharing Hub

Full document details: SAE AS4690D

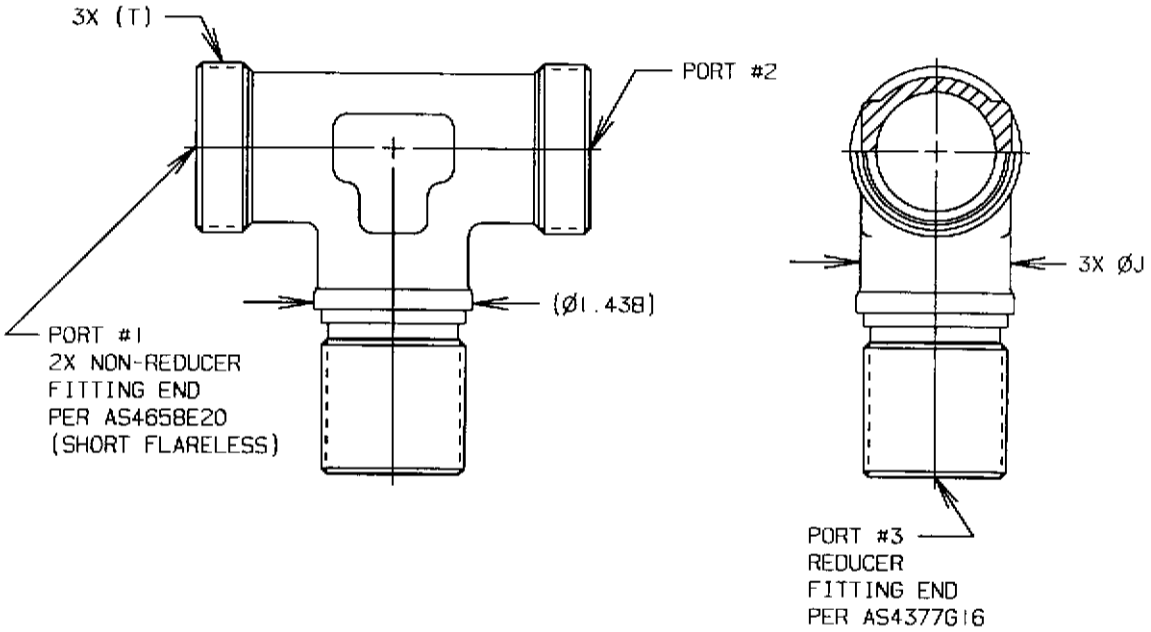

FIGURE 2A - FITTING, TEE, SIZE 20
SHORT ENDS TO SIZE 16 BULKHEAD REDUCER

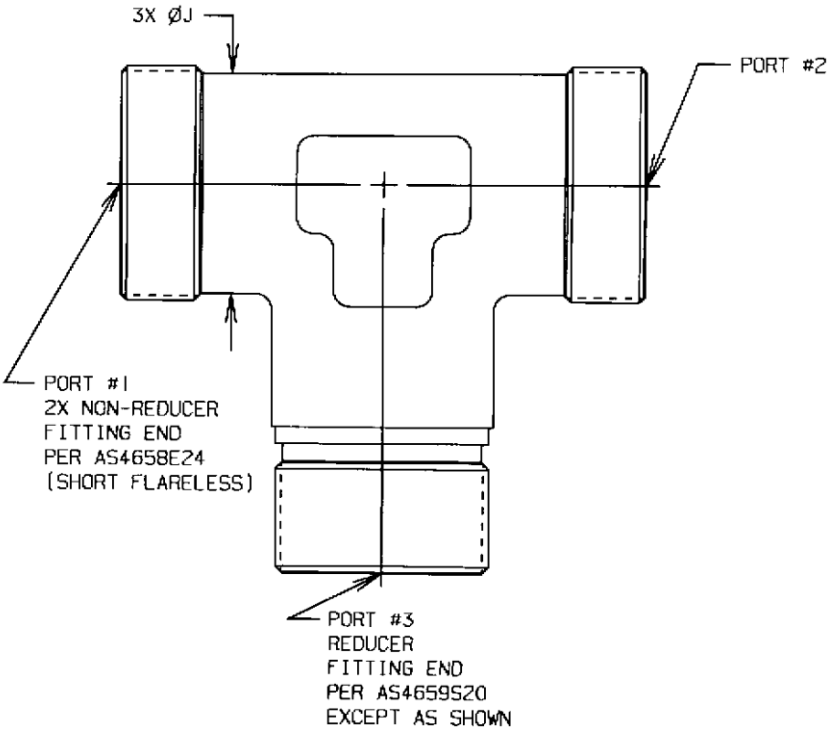

FIGURE 2B - FITTING, TEE, SIZE 24
SHORT ENDS TO SIZE 20 BULKHEAD REDUCER

AVA Documents
Document Sharing Hub
Full document details: SAE AS4690D

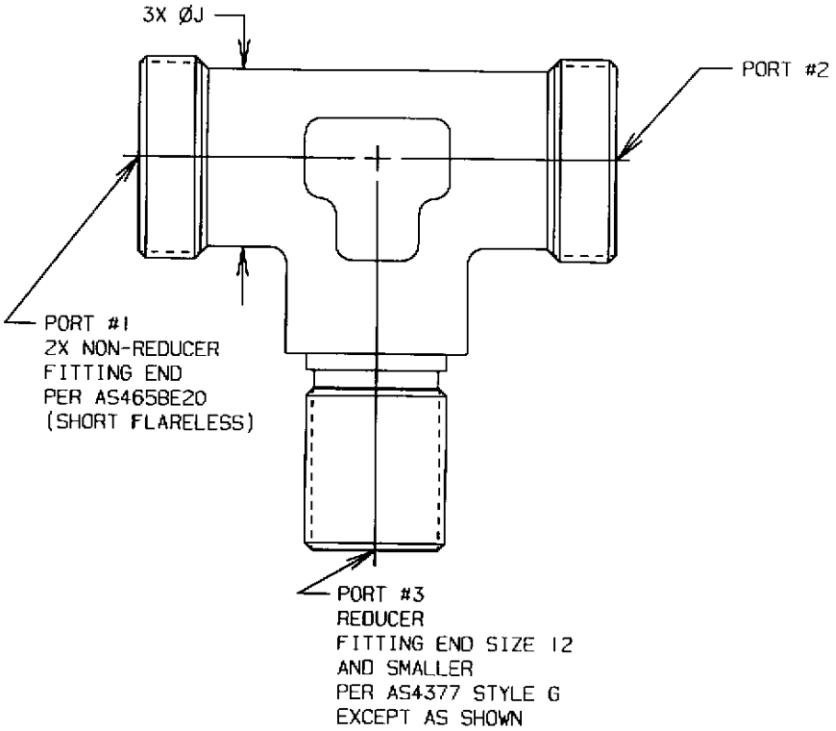

FIGURE 2C - FITTING, TEE, SIZE 20 SHORT ENDS TO SIZE 12 AND SMALLER BULKHEAD REDUCER

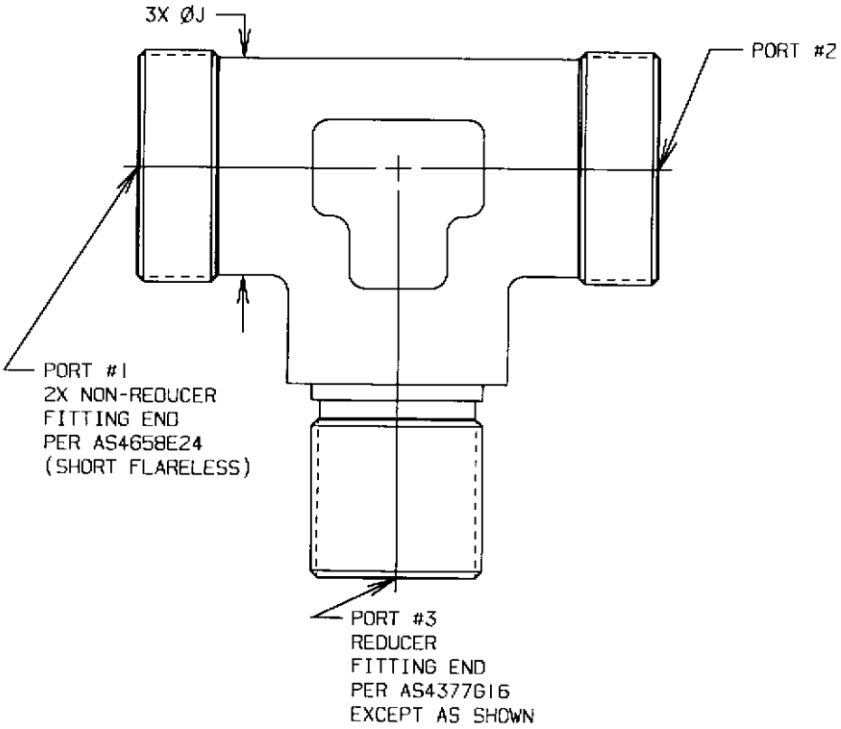

FIGURE 2D - FITTING, TEE, SIZE 24 SHORT ENDS TO SIZE 16 BULKHEAD REDUCER

FIGURE 2

AVA Documents
Document Sharing Hub
Full document details: SAE AS4690D