FEDERAL SUPPLY CLASS
4720

RATIONALE

CORRECT NOTE /8/ WORDING.

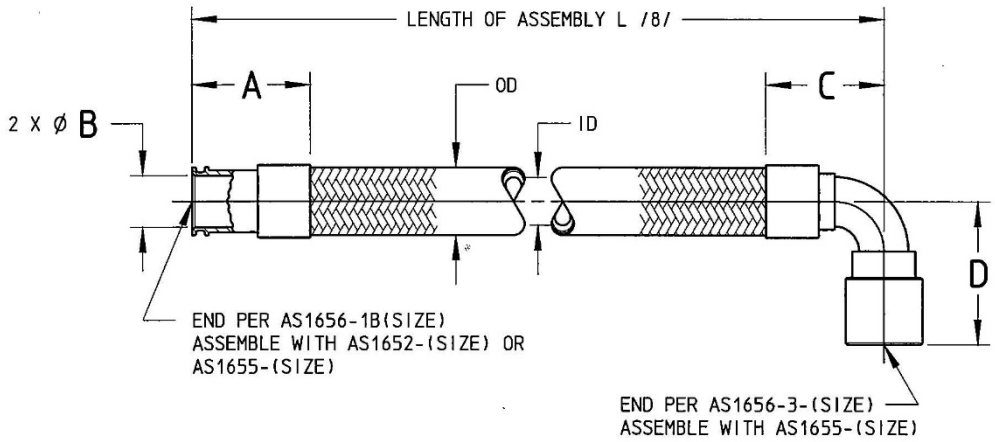

FIGURE 1 - HOSE ASSEMBLY

TABLE 1 - BASIC HOSE AND END FITTING DIMENSIONS

BASIC NO. AND SIZE CODE	HOSE SIZE (REF)	A MAX	B (REF)	C MAX	D MIN	D MAX	ID (REF)	OD MIN	OD MAX
AS4803-08	.500	1.40	.425	1.39	1.22	1.30	.500	.65	.73
AS4803-10	.625	1.40	.550	1.57	1.35	1.43	.625	.81	.85
AS4803-12	.750	1.53	.654	2.05	1.74	1.82	.750	.94	.98
AS4803-16	1.000	1.73	.909	2.17	1.94	2.02	1.000	1.19	1.23

TABLE 2 - LENGTH TOLERANCE

HOSE ASSEMBLY LENGTH	PREFERRED INCREMENTS	TOLERANCE
UNDER 18 INCHES	(NOT LESS THAN) .125	+.125/-.125
18 TO 36 INCHES EXCLUSIVE	(NOT LESS THAN) .250	+.250/-.250
36 TO 100 INCHES EXCLUSIVE	(NOT LESS THAN) .500	+.375/-.375
100 INCHES AND OVER	(NOT LESS THAN) 1.000	+.5%/-.500

TABLE 3 - HOSE ASSEMBLY WEIGHT INFORMATION

HOSE SIZE CODE	HOSE LB/IN NOM (REF)	END FITTING LB/EA STRAIGHT NOM (REF)	END FITTING LB/EA 90° NOM (REF)	HOSE LENGTH CORRECTION FACTOR, INCH /9/ STRAIGHT	HOSE LENGTH CORRECTION FACTOR, INCH /9/ 90°
08	.0081	.038	.071	.70	.77
10	.0111	.047	.094	.70	.95
12	.0137	.083	.153	.75	1.26
16	.0182	.118	.208	.80	1.39

SAE values your input. To provide feedback on this Technical Report, please visit http://standards.sae.org/AS4803D

THIRD ANGLE PROJECTION

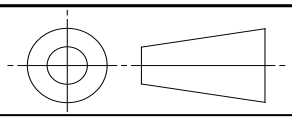

ISSUED 1993-06 REAFFIRMED 2007-01 REVISED 2018-08

CUSTODIAN: G-3/G-3D

PROCUREMENT SPECIFICATION: AS4468 /2/

AEROSPACE STANDARD

HOSE ASSEMBLY, LINED SILICONE,
125 PSI, FIXED CAVITY COUPLING, POTABLE WATER,
STRAIGHT MALE TO 90° FEMALE

AS4803™
SHEET 1 OF 2

REV. D

SAE Technical Standards Board Rules provide that: "This report is published by SAE to advance the state of technical and engineering sciences. The use of this report is entirely voluntary, and its applicability and suitability for any particular use, including any patent infringement arising therefrom, is the sole responsibility of the user."

SAE reviews each technical report at least every five years at which time it may be revised, reaffirmed, stabilized, or cancelled. SAE invites your written comments and suggestions.

Copyright 2018 SAE International
All rights reserved. No part of this publication may be reproduced, stored in a retrieval system or transmitted, in any form or by any means, electronic, mechanical, photocopying, recording, or otherwise, without the prior written permission of SAE.

TO PLACE A DOCUMENT ORDER: **Tel: 877-606-7323 (inside USA and Canada)** **Tel: +1 724-776-4970 (outside USA)**
Fax: 724-776-0790 **Email: CustomerService@sae.org** **SAE WEB ADDRESS: http://www.sae.org**

Documents Document Sharing Hub
Full document details: SAE AS4803D

NOTES:

1. MATERIAL AND FINISH: PER AS4468, TABLE 1. ALL FITTING COMPONENTS 300 SERIES CORROSION RESISTANT STEEL, PASSIVATED.

/2/ PROCUREMENT SPECIFICATION: AS4468 EXCEPT AS SPECIFIED ON THIS STANDARD. PRODUCT SUPPLIED TO THIS SPECIFICATION SHALL BE MANUFACTURED AND ASSEMBLED BY AN ACCREDITED MANUFACTURER OR ASSEMBLED BY AN ACCREDITED DISTRIBUTOR LISTED IN THE PERFORMANCE REVIEW INSTITUTE (PRI) QUALIFIED PRODUCTS LIST (QPL) PRI QPL AS4468 FOR THIS STANDARD. SEE www.eAuditNet.com FOR CURRENT QPL ON LINE.

3. INTENDED USE: THESE HOSE ASSEMBLIES ARE INTENDED FOR USE IN POTABLE WATER SYSTEM INSTALLATIONS WHERE A HIGH DEGREE OF FLEXIBILITY IS REQUIRED.

4. IDENTIFICATION: PER AS4468.

5. OPERATING CHARACTERISTICS:

   a. OPERATING TEMPERATURE: -65 TO +160 °F (-54 TO +71 °C).

   b. OPERATING PRESSURE: 125 PSI MAX

6. FUNCTIONAL TEST AND CLEANING: PER AS4468.

7. CONSTRUCTION: PER AS4468.

/8/ LENGTH "L" IS A FOUR-DIGIT NUMBER OF WHICH THE FIRST THREE DIGITS DESCRIBE THE HOSE ASSEMBLY LENGTH IN WHOLE INCHES, AND THE FOURTH DIGIT THE FRACTION OF AN INCH IN EIGHTHS. LENGTH "L" IS MEASURED FROM "END OF FITTING" TO "ELBOW VERTICAL CENTERLINE". SEE TABLE 2 FOR LENGTH TOLERANCES.

/9/ HOSE WEIGHT PLUS EACH END FITTING WEIGHT EQUALS HOSE ASSEMBLY WEIGHT. FOR DETERMINING HOSE WEIGHT, DEDUCT APPROPRIATE LENGTH CORRECTION FACTOR FROM EACH END OF THE ASSEMBLY LENGTH.

10. DIMENSIONING AND TOLERANCING: ASME Y14.5M-1994.

11. DIMENSIONS ARE IN INCHES. UNLESS OTHERWISE SPECIFIED, TOLERANCES: LINEAR DIMENSIONS ±.010, ANGULAR DIMENSIONS ±2°.

12. EXAMPLE OF PART NUMBER:

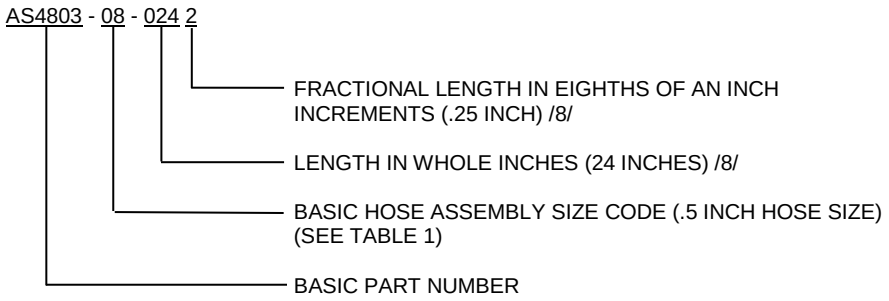

13. REVISION INDICATOR: A CHANGE BAR (|) LOCATED IN THE LEFT MARGIN IS FOR THE CONVENIENCE OF THE USER IN LOCATING AREAS WHERE TECHNICAL REVISIONS, NOT EDITORIAL CHANGES HAVE BEEN MADE TO THE PREVIOUS ISSUE OF THIS DOCUMENT. AN (R) SYMBOL TO THE LEFT OF THE DOCUMENT TITLE INDICATES A COMPLETE REVISION OF THE DOCUMENT, INCLUDING TECHNICAL REVISIONS. CHANGE BARS AND (R) ARE NOT USED IN ORIGINAL PUBLICATIONS NOR IN DOCUMENTS THAT CONTAIN EDITORIAL CHANGES ONLY.

14. INVENTORIED PARTS CONFORMING TO THE PREVIOUS LETTER CHANGE MAY BE USED TO DEPLETION.

AVA Documents
Document Sharing Hub
Full document details: SAE AS4803D