REV. A

AS5531™

FEDERAL SUPPLY CLASS
4730

RATIONALE

THIS TECHNICAL REPORT IS BEING STABILIZED BECAUSE IT COVERS TECHNOLOGY, PRODUCTS, OR PROCESSES WHICH ARE MATURE AND NOT LIKELY TO CHANGE IN THE FORESEEABLE FUTURE.

STABILIZED NOTICE

THIS DOCUMENT HAS BEEN DECLARED "STABILIZED" BY SAE G-3, AEROSPACE COUPLINGS, FITTINGS, HOSE, TUBING ASSEMBLIES COMMITTEE AND WILL NO LONGER BE SUBJECTED TO PERIODIC REVIEWS FOR CURRENCY. USERS ARE RESPONSIBLE FOR VERIFYING REFERENCES AND CONTINUED SUITABILITY OF TECHNICAL REQUIREMENTS. NEWER TECHNOLOGY MAY EXIST.

For more information on this standard, visit
https://www.sae.org/standards/content/AS5531A/

THIRD ANGLE PROJECTION

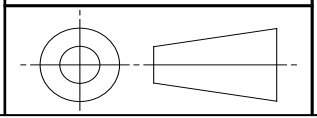

ISSUED 2006-08 REAFFIRMED 2013-01 STABILIZED 2026-06

CUSTODIAN: G-3/G-3B

PROCUREMENT SPECIFICATION: AS18280 /4/

SAE INTERNATIONAL

AEROSPACE STANDARD

UNION, SHORT FLARELESS TUBE
FITTING, INTERNALLY SWAGED

AS5531™

REV. A

SAE Executive Standards Committee Rules provide that: " This report is published by SAE to advance the state of technical and engineering sciences. The use of this report is entirely voluntary, and its applicability and suitability for any particular use, including any patent infringement arising therefrom, is the sole responsibility of the user."

SAE reviews each technical report at least every five years at which time it may be revised, reaffirmed, stabilized, or cancelled. SAE invites your written comments and suggestions.

Copyright © 2026 SAE International
All rights reserved. No part of this publication may be reproduced, stored in a retrieval system, transmitted, in any form or by any means, electronic, mechanical, photocopying, recording, or otherwise, or used for text and data mining, AI training, or similar technologies, without the prior written permission of SAE.

TO PLACE A DOCUMENT ORDER: **Tel: 1-877-606-7323 (U.S. and Canada only)** **Tel: 1-724-776-4970 (outside U.S. and Canada)**
Fax: 724-776-0790 **Email: CustomerService@sae.org** **SAE WEB ADDRESS: http://www.sae.org**

AVA Documents Document Sharing Hub
Full document details: SAE AS5531A

WARNING

THIS DOCUMENT INCLUDES CADMIUM AS A PLATING MATERIAL. THE USE OF CADMIUM HAS BEEN RESTRICTED AND/OR BANNED FOR USE IN MANY COUNTRIES DUE TO ENVIRONMENTAL AND HEALTH CONCERNS. THE USER SHOULD CONSULT WITH LOCAL OFFICIALS ON THE ENVIRONMENTAL AND HEALTH REGULATIONS REGARDING ITS USE.

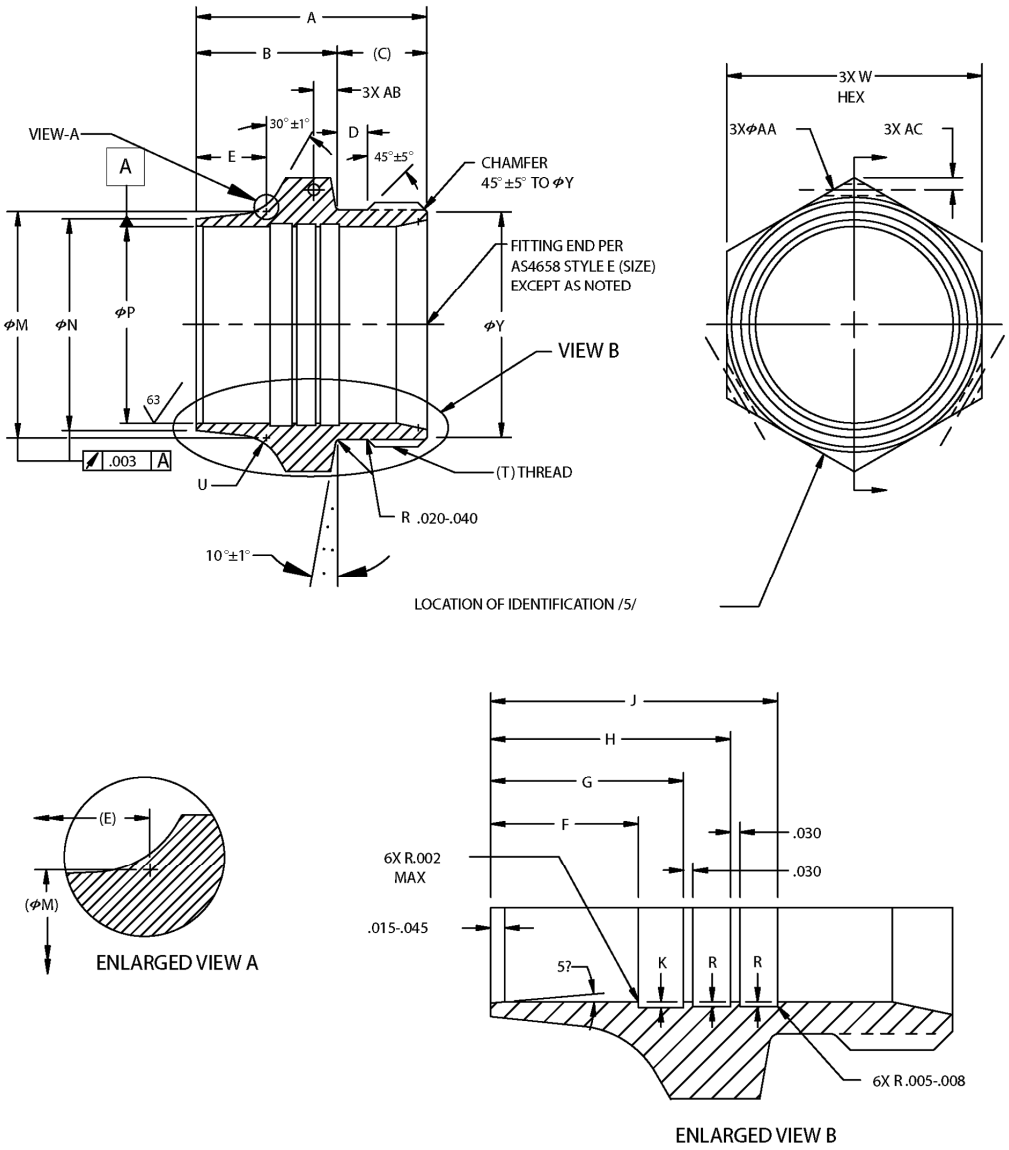

FIGURE 1

Documents
Document Sharing Hub
Full document details: SAE AS5531A