FEDERAL SUPPLY CLASS
4730

RATIONALE

AS5836 HAS BEEN REAFFIRMED TO COMPLY WITH THE SAE FIVE-YEAR REVIEW POLICY.

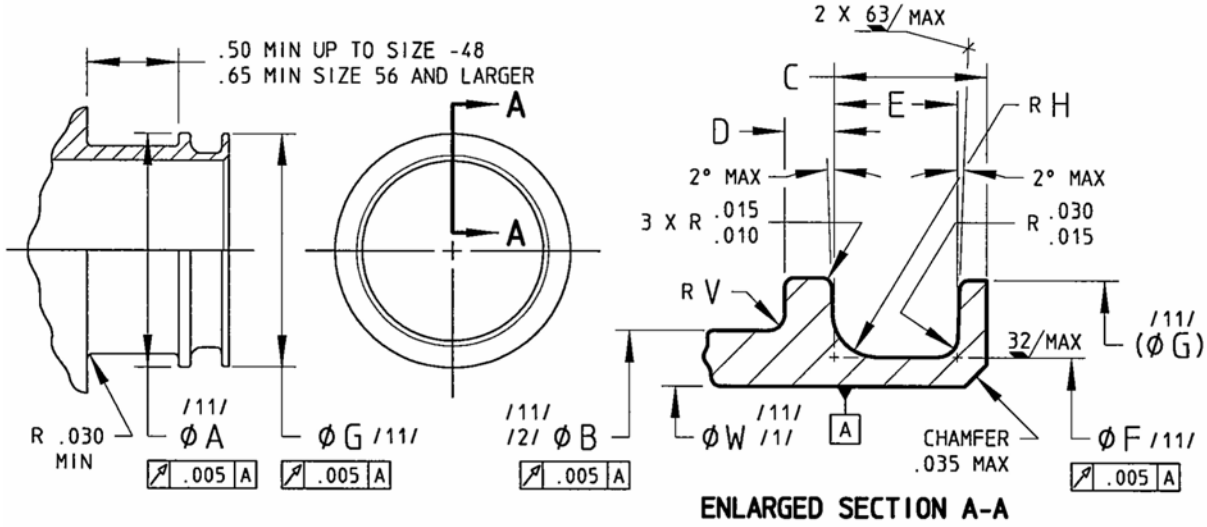

FIGURE 1 - MALE FERRULE END

TABLE 1 - MALE FERRULEL DIMENSIONS /3/

BASIC NO. AS5836-1 /10/ SIZE CODE	NOM TUBE SIZE REF	/11/ A ± .002	/11/ /2/ B ± .0015	C ± .0025	D ± .0025	E ± .0025	/11/ F ± .002	/11/ G ± .002	H	V	V TOL.	/11/ /1/ W MAX.
08	.500	.697	.6225	.1305	.0525	.0905	.594	.691	.030	.013	±.003	.536
10	.625	.822	.7475	.1305	.0525	.0905	.718	.816	.030	.013	±.003	.659
12	.750	1.003	.8875	.1675	.0675	.1275	.847	.997	.045	.023	±.003	.787
16	1.000	1.284	1.1395	.2075	.0675	.1675	1.067	1.278	.060	.023	±.003	1.006
20	1.250	1.531	1.3895	.2075	.0675	.1675	1.319	1.525	.060	.023	±.003	1.257
24	1.500	1.801	1.6395	.2075	.0675	.1675	1.589	1.795	.060	.023	±.003	1.526
28	1.750	2.052	1.8895	.2075	.0675	.1675	1.840	2.046	.060	.030	±.003	1.775
32	2.000	2.325	2.1425	.2075	.0895	.1675	2.114	2.319	.060	.030	±.003	2.047
36	2.250	2.575	2.3925	.2075	.0895	.1675	2.363	2.569	.060	.030	±.003	2.295
40	2.500	2.825	2.6425	.2075	.0895	.1675	2.612	2.819	.060	.035	±.005	2.543
48	3.000	3.325	3.1425	.2075	.0895	.1675	3.112	3.319	.060	.035	±.005	3.040
56	3.500	3.839	3.6425	.2075	.1195	.1675	3.627	3.833	.060	.035	±.005	3.552
64	4.000	4.345	4.1515	.2075	.1195	.1675	4.132	4.339	.060	.040	±.005	4.055
72	4.500	4.846	4.6605	.2075	.1195	.1675	4.633	4.840	.060	.040	±.005	4.553
80	5.000	5.346	5.1695	.2075	.1315	.1675	5.133	5.340	.060	.040	±.005	5.051
88	5.500	5.846	5.6785	.2075	.1315	.1675	5.632	5.840	.060	.040	±.005	5.547

SAE values your input. To provide feedback on this Technical Report, please visit http://www.sae.org/technical/standards/AS5836

THIRD ANGLE PROJECTION

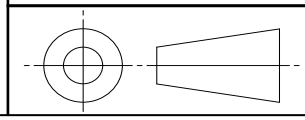

ISSUED 2006-09 REAFFIRMED 2013-01

CUSTODIAN: G-3/G-3A

PROCUREMENT SPECIFICATION: AS5830

SAE Aerospace
An SAE International Group

AEROSPACE STANDARD

FITTING END, THREADLESS-FLEXIBLE, FIXED CAVITY, CURRENT CARRYING, SELF BONDING MALE AND FEMALE DESIGN STANDARD

SAE AS5836

SHEET 1 OF 4

SAE Technical Standards Board Rules provide that: "This report is published by SAE to advance the state of technical and engineering sciences. The use of this report is entirely voluntary, and its applicability and suitability for any particular use, including any patent infringement arising therefrom, is the sole responsibility of the user."

SAE reviews each technical report at least every five years at which time it may be revised, reaffirmed, stabilized, or cancelled. SAE invites your written comments and suggestions.

Copyright 2013 SAE International
All rights reserved. No part of this publication may be reproduced, stored in a retrieval system or transmitted, in any form or by any means, electronic, mechanical, photocopying, recording, or otherwise, without the prior written permission of SAE.
TO PLACE A DOCUMENT ORDER: Tel: 877-606-7323 (inside USA and Canada) Fax: 724-776-0790 Tel: +1 724-776-4970 (outside USA) Email: CustomerService@sae.org SAE WEB ADDRESS: http://www.sae.org

Documents
Document Sharing Hub

Full document details: SAE AS5836

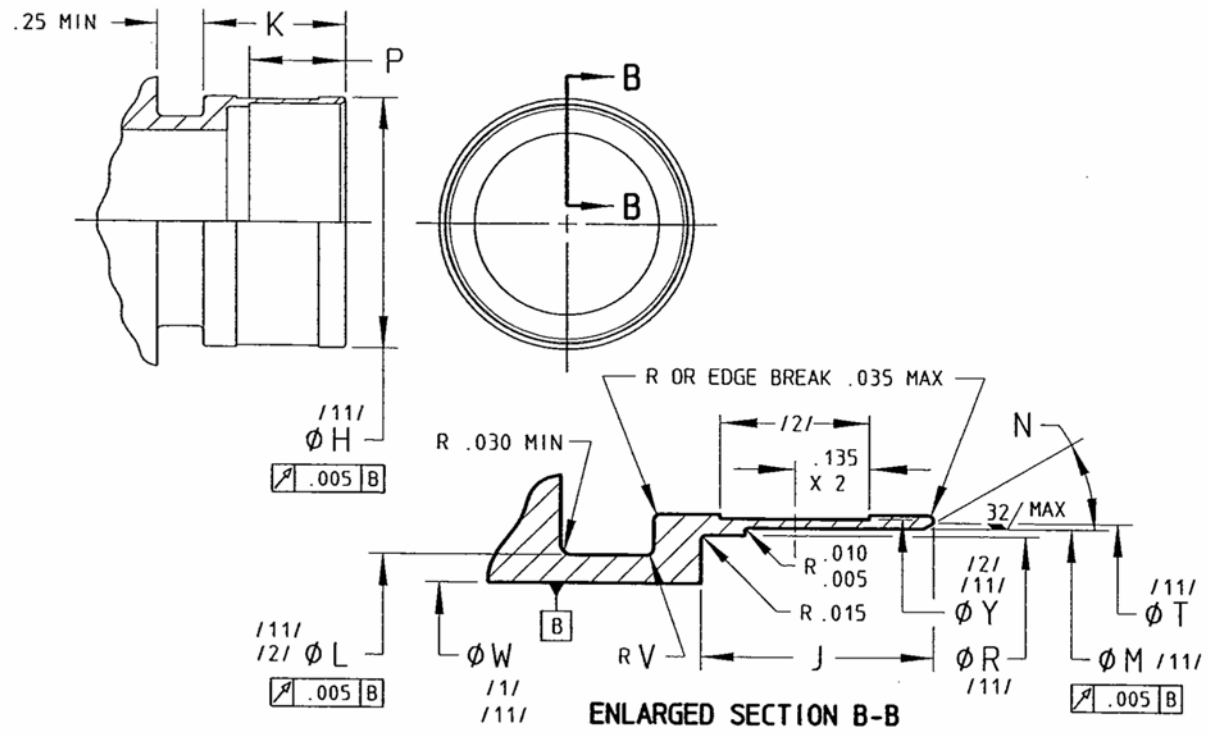

FIGURE 2 - FEMALE FERRULE END

TABLE 2 - FEMALE FERRULE DIMENSIONS /3/

BASIC NO. AS5836-2 /10/ SIZE CODE	NOM TUBE SIZE REF	/11/ H ± .002	J ± .010	K ± .003	/11/ /2/ L ± .0015	M ± .002	N ± 2°	P ± .010	/11/ R	/11/ T	V	V TOL.	/11/ /1/ W MAX.	/11/ /2/ Y ± .002
08	.500	.775	.478	.627	.6225	.703	35	.444	.663	.735	.013	± .003	.536	.755
10	.625	.900	.478	.627	.7475	.828	35	.444	.788	.860	.013	± .003	.659	.880
12	.750	1.081	.551	.731	.8875	1.009	35	.496	.969	1.041	.023	± .003	.787	1.061
16	1.000	1.362	.631	.811	1.1395	1.290	30	.536	1.250	1.322	.023	± .003	1.006	1.342
20	1.250	1.609	.631	.811	1.3895	1.537	30	.536	1.497	1.569	.023	± .003	1.257	1.589
24	1.500	1.879	.631	.811	1.6395	1.807	30	.536	1.767	1.839	.023	± .003	1.526	1.859
28	1.750	2.131	.631	.811	1.8895	2.059	30	.536	2.019	2.091	.030	± .003	1.775	2.111
32	2.000	2.404	.661	.855	2.1425	2.332	30	.558	2.292	2.364	.030	± .003	2.047	2.384
36	2.250	2.654	.661	.855	2.3925	2.582	30	.558	2.542	2.614	.030	± .003	2.295	2.634
40	2.500	2.908	.661	.855	2.6425	2.832	30	.558	2.792	2.864	.035	± .005	2.543	2.888
48	3.000	3.412	.661	.855	3.1425	3.332	30	.558	3.292	3.364	.035	± .005	3.040	3.392
56	3.500	3.934	.661	.945	3.6425	3.848	30	.618	3.808	3.880	.035	± .005	3.552	3.914
64	4.000	4.446	.682	.975	4.1515	4.354	30	.648	4.314	4.386	.040	± .005	4.055	4.426
72	4.500	4.935	.885	1.005	4.6605	4.855	30	.678	4.815	4.887	.040	± .005	4.553	4.915
80	5.000	5.435	.939	1.059	5.1695	5.355	30	.720	5.315	5.387	.040	± .005	5.051	5.415
88	5.500	5.935	.969	1.089	5.6785	5.855	30	.750	5.815	5.887	.040	± .005	5.547	5.915

AVA Documents
Document Sharing Hub
Full document details: SAE AS5836