FEDERAL SUPPLY CLASS
4730

RATIONALE

THIS TECHNICAL REPORT IS BEING STABILIZED BECAUSE IT COVERS TECHNOLOGY, PRODUCTS, OR PROCESSES WHICH ARE MATURE AND NOT LIKELY TO CHANGE IN THE FORESEEABLE FUTURE.

STABILIZED NOTICE

THIS DOCUMENT HAS BEEN DECLARED "STABILIZED" BY SAE G-3, AEROSPACE COUPLINGS, FITTINGS, HOSE, TUBING ASSEMBLIES COMMITTEE AND WILL NO LONGER BE SUBJECTED TO PERIODIC REVIEWS FOR CURRENCY. USERS ARE RESPONSIBLE FOR VERIFYING REFERENCES AND CONTINUED SUITABILITY OF TECHNICAL REQUIREMENTS. NEWER TECHNOLOGY MAY EXIST.

ISSUED 2007-07 REAFFIRMED 2013-01 STABILIZED 2026-05

For more information on this standard, visit
https://www.sae.org/standards/content/AS5948A/

THIRD ANGLE PROJECTION

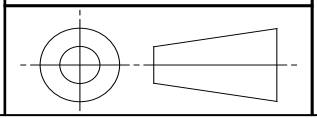

CUSTODIAN: G-3/G-3A

PROCUREMENT SPECIFICATION: NONE /1/

AEROSPACE STANDARD

FITTING, BULKHEAD END -
THREADED COUPLING, RIGID, SELF-BONDING,
DESIGN STANDARD

AS5948™

REV. A

SAE Executive Standards Committee Rules provide that: " This report is published by SAE to advance the state of technical and engineering sciences. The use of this report is entirely voluntary, and its applicability and suitability for any particular use, including any patent infringement arising therefrom, is the sole responsibility of the user."

SAE reviews each technical report at least every five years at which time it may be revised, reaffirmed, stabilized, or cancelled. SAE invites your written comments and suggestions.

Copyright © 2026 SAE International
All rights reserved. No part of this publication may be reproduced, stored in a retrieval system, transmitted, in any form or by any means, electronic, mechanical, photocopying, recording, or otherwise, or used for text and data mining, AI training, or similar technologies, without the prior written permission of SAE.

TO PLACE A DOCUMENT ORDER: **Tel: 1-877-606-7323 (U.S. and Canada only)** **Tel: 1-724-776-4970 (outside U.S. and Canada)**
Fax: 724-776-0790 **Email: CustomerService@sae.org** **SAE WEB ADDRESS: http://www.sae.org**

AVA Documents Document Sharing Hub
Full document details: SAE AS5948A

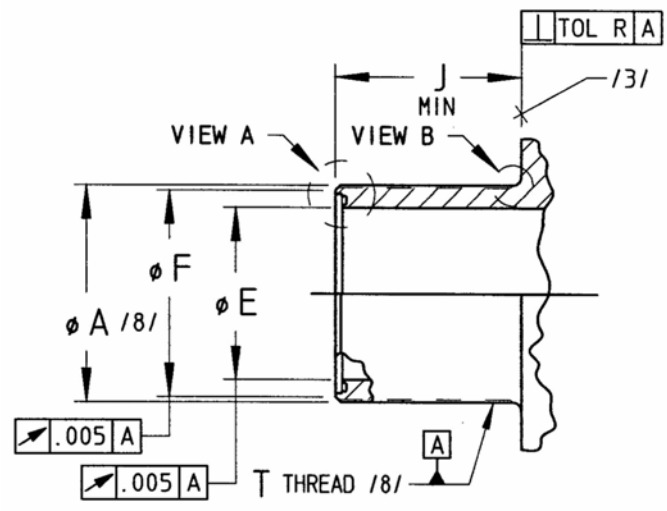

FIGURE 1 - FITTING END DESIGN, STYLE A

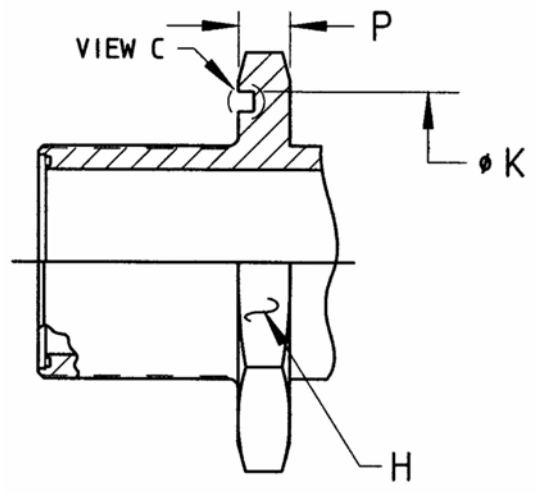

FIGURE 2 - FITTING END DESIGN, STYLE B
SAME AS STYLE A EXCEPT AS SHOWN

AVA Documents
Document Sharing Hub
Full document details: SAE AS5948A