REV. B

SAE AS63

FEDERAL SUPPLY CLASS

RATIONALE

THIS NONCURRENT STANDARD HAS BEEN STABILIZED.

STABILIZED NOTICE

THIS DOCUMENT HAS BEEN DECLARED "STABILIZED" BY THE SAE E-25 GENERAL STANDARDS FOR AEROSPACE AND PROPULSION SYSTEMS AND WILL NO LONGER BE SUBJECTED TO PERIODIC REVIEWS FOR CURRENCY. USERS ARE RESPONSIBLE FOR VERIFYING REFERENCES AND CONTINUED SUITABILITY OF TECHNICAL REQUIREMENTS. NEWER TECHNOLOGY MAY EXIST.

ISSUED 1941-11 NONCURRENT 1973-08 REAFFIRMED NONCURRENT 2006-05 STABILIZED 2013-01

SAE values your input. To provide feedback on this Technical Report, please visit http://www.sae.org/technical/standards/AS63B

THIRD ANGLE PROJECTION

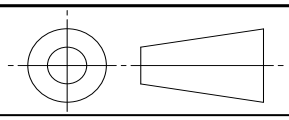

CUSTODIAN: E-25

PROCUREMENT SPECIFICATION:

SAE Aerospace
An SAE International Group

AEROSPACE STANDARD

CARBURETOR FLANGE, AIRCRAFT
4 BOLT - SINGLE BARREL - NO. 2, 3, 4, 5, 7 AND 9

SAE AS63

REV. B

SAE Technical Standards Board Rules provide that: "This report is published by SAE to advance the state of technical and engineering sciences. The use of this report is entirely voluntary, and its applicability and suitability for any particular use, including any patent infringement arising therefrom, is the sole responsibility of the user."

SAE reviews each technical report at least every five years at which time it may be revised, reaffirmed, stabilized, or cancelled. SAE invites your written comments and suggestions.

Copyright 2013 SAE International
All rights reserved. No part of this publication may be reproduced, stored in a retrieval system or transmitted, in any form or by any means, electronic, mechanical, photocopying, recording, or otherwise, without the prior written permission of SAE.

TO PLACE A DOCUMENT ORDER: **Tel: 877-606-7323 (inside USA and Canada)** **Tel: +1 724-776-4970 (outside USA)**
Fax: 724-776-0790 **Email: CustomerService@sae.org** **SAE WEB ADDRESS: http://www.sae.org**

Documents Document Sharing Hub

Full document details: SAE AS63B

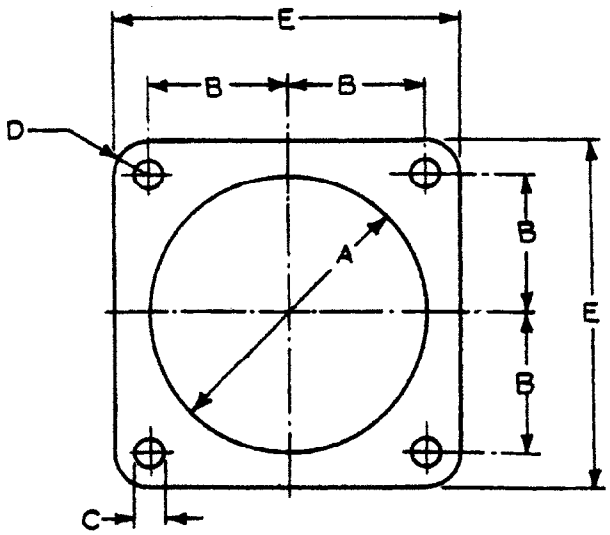

NOMINAL SIZE	NOMINAL OUTLET AREA - SQ.IN	A	B ±.005	C	D	E
2	1.6	1.438	.875	.281	.281	2.313
3	2.25	1.688	.969	.281	.281	2.500
4	3	1.938	1.094	.281	.281	2.750
5	3.75	2.188	1.172	.344	.344	3.031
6	3.75	2.438	1.250	.344	.344	3.313
7	5.75	2.688	1.375	.344	.375	3.500
9	8	3.188	1.594	.406	.406	4.000

UNLESS OTHERWISE SPECIFIED, ALLOWABLE TOLER. ON FINISHED DIM'S. IS ±.010.

AVA Documents
Document Sharing Hub

Full document details: SAE AS63B