RATIONALE

THIS TECHNICAL REPORT IS BEING STABILIZED BECAUSE IT COVERS TECHNOLOGY, PRODUCTS, OR PROCESSES WHICH ARE MATURE AND NOT LIKELY TO CHANGE IN THE FORESEEABLE FUTURE.

STABILIZED NOTICE

THIS DOCUMENT HAS BEEN DECLARED "STABILIZED" BY SAE G-3, AEROSPACE COUPLINGS, FITTINGS, HOSE, TUBING ASSEMBLIES COMMITTEE AND WILL NO LONGER BE SUBJECTED TO PERIODIC REVIEWS FOR CURRENCY. USERS ARE RESPONSIBLE FOR VERIFYING REFERENCES AND CONTINUED SUITABILITY OF TECHNICAL REQUIREMENTS. NEWER TECHNOLOGY MAY EXIST.

ISSUED 1960-11 REAFFIRMED 2006-05 REVISED 2012-03 STABILIZED 2023-10

For more information on this standard, visit
https://www.sae.org/standards/content/AS685E/

THIRD ANGLE PROJECTION

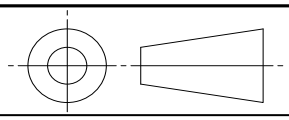

SAE Executive Standards Committee Rules provide that: " This report is published by SAE to advance the state of technical and engineering sciences. The use of this report is entirely voluntary, and its applicability and suitability for any particular use, including any patent infringement arising therefrom, is the sole responsibility of the user."

SAE reviews each technical report at least every five years at which time it may be revised, reaffirmed, stabilized, or cancelled. SAE invites your written comments and suggestions.

CUSTODIAN: E-25

SAE INTERNATIONAL

AEROSPACE STANDARD

PILOTED RING SEAL
FLUID CONNECTION BOSSES

AS685™

REV. E

Copyright © 2023 SAE International
All rights reserved. No part of this publication may be reproduced, stored in a retrieval system or transmitted, in any form or by any means, electronic, mechanical, photocopying, recording, or otherwise, without the prior written permission of SAE.

TO PLACE A DOCUMENT ORDER: **Tel: 877-606-7323 (inside USA and Canada)** **Tel: +1 724-776-4970 (outside USA)**
Fax: 724-776-0790 **Email: CustomerService@sae.org** **SAE WEB ADDRESS: http://www.sae.org**

Documents Document Sharing Hub
Full document details: SAE AS685E

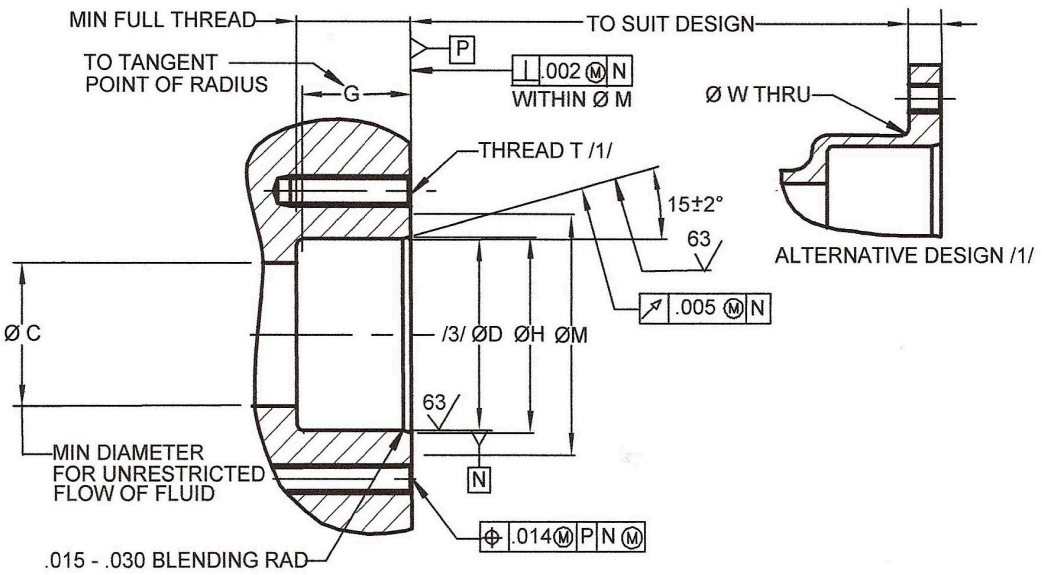

FIGURE 1 – SECTION XX (TYPICAL) TAPPED OR THRU HOLE INSTALLATION BOSSES

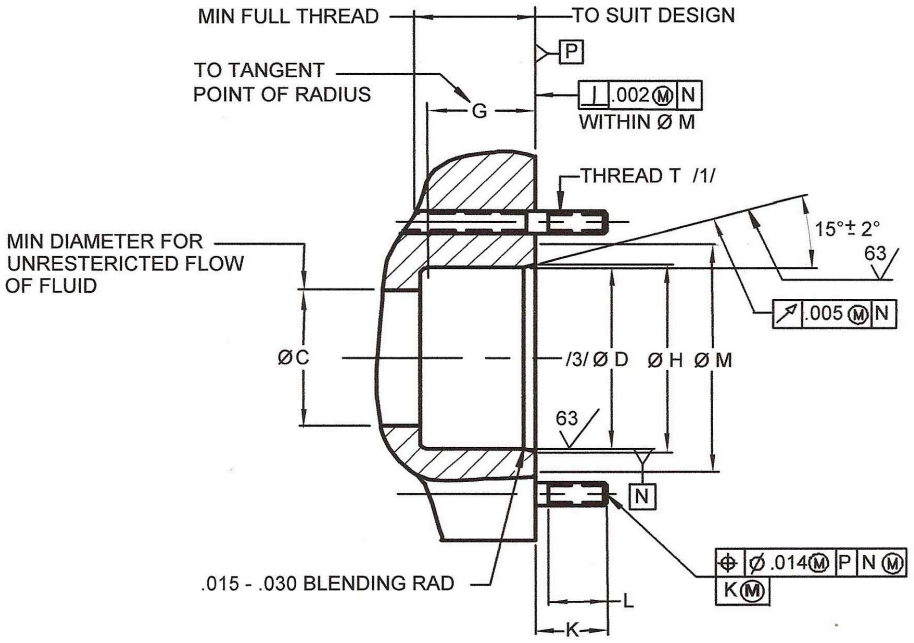

FIGURE 2 – SECTION XX (TYPICAL) THRU STUD INSTALLATION

AVA Documents
Document Sharing Hub
Full document details: SAE AS685E