FEDERAL SUPPLY CLASS

RATIONALE

AS782 HAS BEEN REAFFIRMED TO COMPLY WITH THE SAE FIVE-YEAR REVIEW POLICY.

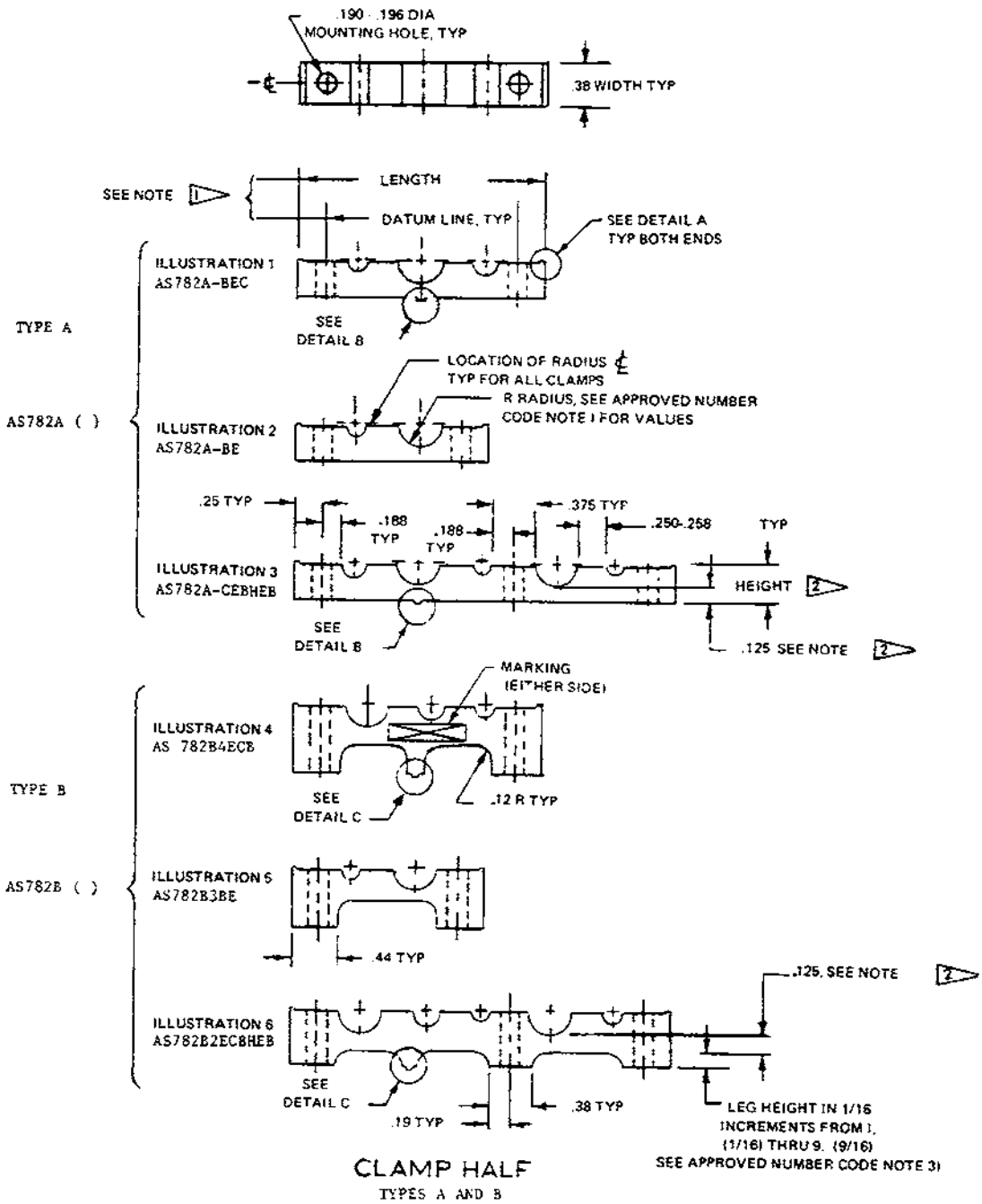

SAE values your input. To provide feedback on this Technical Report, please visit http://www.sae.org/technical/standards/AS782

THIRD ANGLE PROJECTION

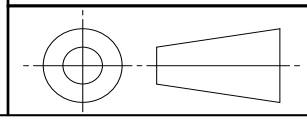

ISSUED 1982-03 REAFFIRMED 2015-04

CUSTODIAN: G-3

AEROSPACE STANDARD

CLAMP, HALF
TUBE SUPPORT

AS782
SHEET 1 OF 6

SAE Technical Standards Board Rules provide that: "This report is published by SAE to advance the state of technical and engineering sciences. The use of this report is entirely voluntary, and its applicability and suitability for any particular use, including any patent infringement arising therefrom, is the sole responsibility of the user."

SAE reviews each technical report at least every five years at which time it may be revised, reaffirmed, stabilized, or cancelled. SAE invites your written comments and suggestions.

Copyright 2015 SAE International
All rights reserved. No part of this publication may be reproduced, stored in a retrieval system or transmitted, in any form or by any means, electronic, mechanical, photocopying, recording, or otherwise, without the prior written permission of SAE.
TO PLACE A DOCUMENT ORDER: Tel: 877-606-7323 (inside USA and Canada) Fax: 724-776-0790 Tel: +1 724-776-4970 (outside USA) Email: CustomerService@sae.org SAE WEB ADDRESS: http://www.sae.org

Full document details: SAE AS782

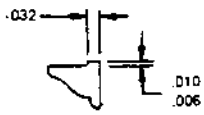

DETAIL A
ENLARGED

THIS SHOULDER TO BE AUTOMATICALLY MANUFACTURED ON BOTH ENDS OF CLAMP BLOCK.

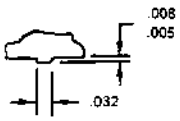

DETAIL B
ENLARGED

THIS TYPE SHOULDER TO BE AUTOMATICALLY MANUFACTURED ONLY WHEN MORE THAN TWO TUBE CAVITIES ARE SPECIFIED BETWEEN TWO MOUNTING HOLES. LOCATE MIDWAY BETWEEN THE MOUNTING HOLES.

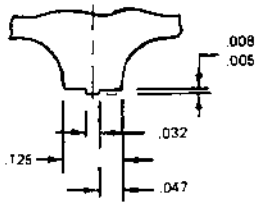

DETAIL C
ENLARGED

THIS TYPE LEG AND SHOULDER TO BE AUTOMATICALLY MANUFACTURED ONLY WHEN MORE THAN TWO TUBE CAVITIES ARE SPECIFIED BETWEEN TWO MOUNTING HOLES. LOCATE MIDWAY BETWEEN THE MOUNTING HOLES.

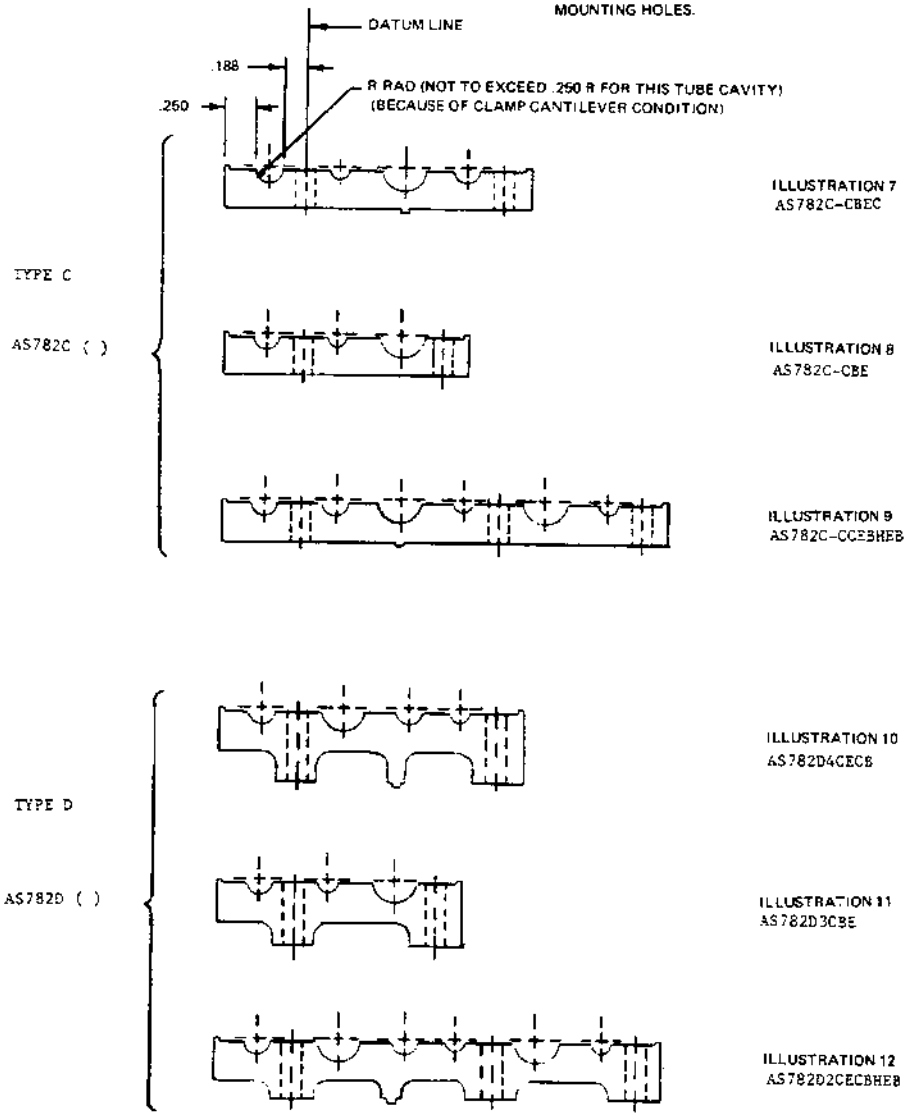

CLAMP HALF
TYPES C AND D

DIMENSIONING AS SHOWN ON SHEET 1 APPLIES EXCEPT FOR LEFT END CONFIGURATION, AS INDICATED.

AVA Documents
Document Sharing Hub
Full document details: SAE AS782