FEDERAL SUPPLY CLASS
5120

RATIONALE

LIMITED SCOPE REVISION REQUIRED. CORRECT FIGURE 1 PLUNGER STROKE DIMENSION AND ADDRESS MINOR TECHNICAL CHANGES AS NEEDED.

NOTICE

THE COMPLETE REQUIREMENTS FOR PROCURING THE PRODUCT DESCRIBED HEREIN SHALL CONSIST OF THIS DOCUMENT AND THE LATEST ISSUE OF AS81969.

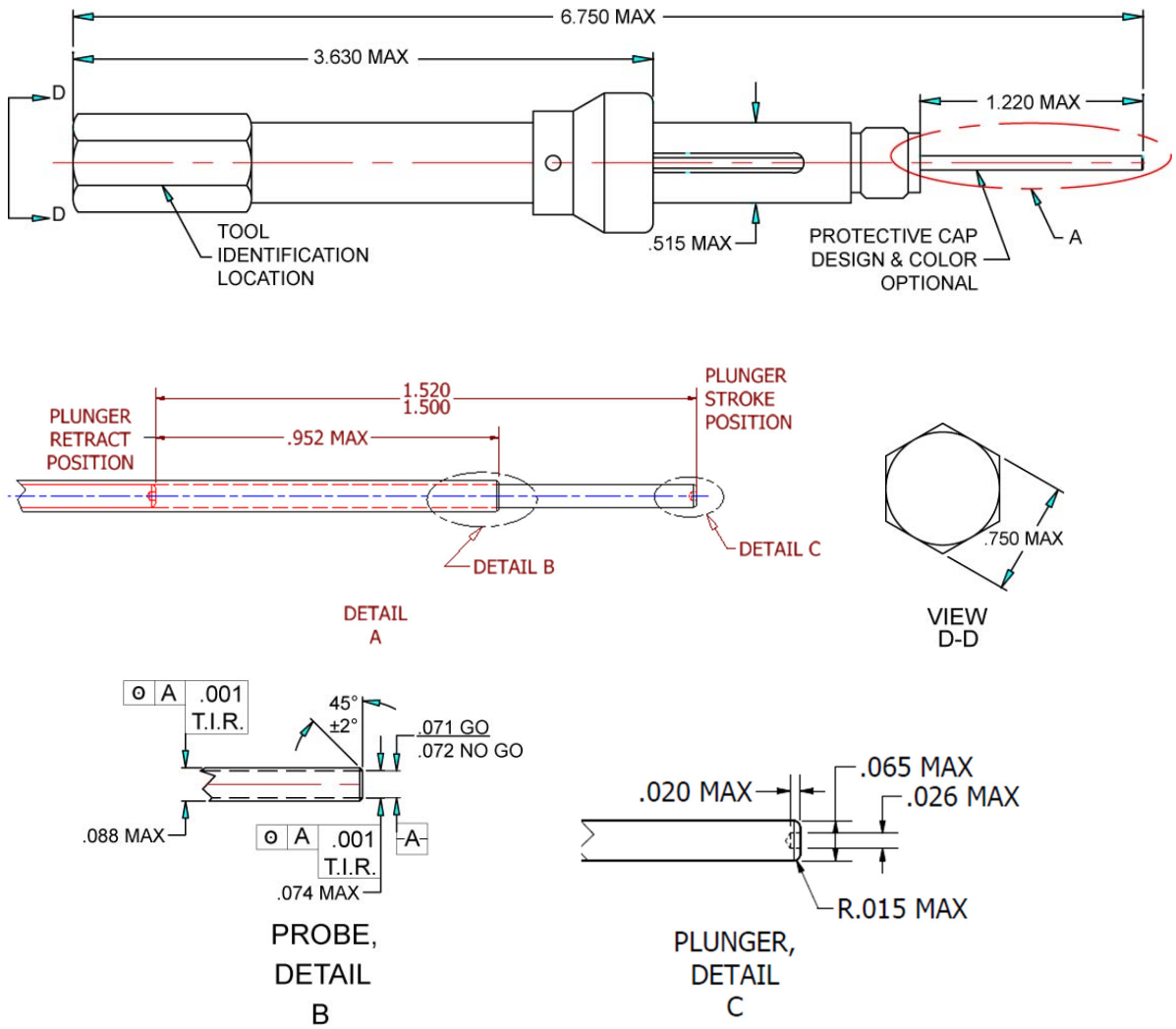

FIGURE 1 - REMOVAL TOOL

For more information on this standard, visit
https://www.sae.org/standards/content/AS81969/34A/

THIRD ANGLE PROJECTION

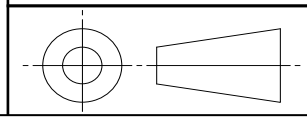

ISSUED 2014-07 REAFFIRMED 2019-06 REVISED 2025-06

CUSTODIAN: AE-8C2

PROCUREMENT SPECIFICATION: AS81969

SAE INTERNATIONAL

AEROSPACE STANDARD

INSTALLING AND REMOVAL TOOLS, CONNECTOR ELECTRICAL CONTACT, TYPE II, CLASS 1, COMPOSITION A (FOR MIL-DTL-28840 CONNECTORS)

AS81969™/34
SHEET 1 OF 2

REV. A

SAE Executive Standards Committee Rules provide that: " This report is published by SAE to advance the state of technical and engineering sciences. The use of this report is entirely voluntary, and its applicability and suitability for any particular use, including any patent infringement arising therefrom, is the sole responsibility of the user."

SAE reviews each technical report at least every five years at which time it may be revised, reaffirmed, stabilized, or cancelled. SAE invites your written comments and suggestions.

Copyright © 2025 SAE International
All rights reserved. No part of this publication may be reproduced, stored in a retrieval system, transmitted, in any form or by any means, electronic, mechanical, photocopying, recording, or otherwise, or used for text and data mining, AI training, or similar technologies, without the prior written permission of SAE.

TO PLACE A DOCUMENT ORDER: **Tel: 877-606-7323 (inside USA and Canada)** **Tel: +1 724-776-4970 (outside USA)**
Fax: 724-776-0790 **Email: CustomerService@sae.org** **SAE WEB ADDRESS: http://www.sae.org**

Documents Document Sharing Hub

Full document details: SAE AS81969_34A

REQUIREMENTS: ALL REQUIREMENTS SHALL CONSIST OF THIS DOCUMENT AND THE LATEST ISSUE OF AS81969.

1. CONFIGURATION:

   a. TOOL CONFIGURATION SHALL BE IN ACCORDANCE WITH FIGURE 1.

   b. DIMENSIONING AND TOLERANCING: ASME Y14.5M-2018. DIMENSIONS ARE IN INCHES. UNLESS OTHERWISE SPECIFIED, TOLERANCES: ±.05.

   c. PLUNGER SHALL BE SPRING-LOADED WITH A RETRACTION FORCE OF 1.5 POUNDS ± 1.0 POUND.

   d. TOOL TIP SHALL BE REPLACEABLE (SEE APPLICATION NOTE 2).

   e. TOOL TIP .071 GO/.072 NO-GO SHALL BE APPLICABLE FOR .952 MINIMUM LENGTH (SEE APPLICATION NOTE 1).

   f. EACH TOOL SHALL BE FURNISHED WITH A PROBE PROTECTIVE CAP. THE CAP DESIGN, MATERIAL, AND COLOR ARE OPTIONAL (SEE APPLICATION NOTE 2).

2. IDENTIFICATION MARKING:

   EACH TOOL SHALL BE LEGIBLY AND PERMANENTLY LASER MARKED ON TOOL HANDLE IN ACCORDANCE WITH MIL-STD-130 (LOCATION OPTIONAL). MARKING SHALL INCLUDE MANUFACTURER NAME OR SYMBOL, MANUFACTURER PART NUMBER, AND SAE PART IDENTIFICATION NUMBER (PIN). SUPPLIER SYMBOL, IF USED, SHALL BE IN ACCORDANCE WITH AIR1351.

3. MATERIALS:

   a. PROBE SHALL BE 410 OR 420 STAINLESS STEEL HARDENED TO ROCKWELL C48-52 AND FREE FROM NICKS AND BURRS.

   b. PLUNGER SHALL BE STAINLESS STEEL IN ACCORDANCE WITH AS81969.

   c. HANDLE AND BODY SHALL BE ALUMINUM ALLOY. HANDLE SHALL BE RED ANODIZED.

4. SAE PART IDENTIFICATION NUMBER (PIN):

```
M81969      /34      -01
   I         I        I
   I         I        I___ DASH NUMBER
   I         I_________ DETAIL SPECIFICATION NUMBER
   I_________________ BASIC SPECIFICATION NUMBER
```

APPLICATION NOTES:

1. TOOL TIP .071 GO/.072 NO-GO DIMENSIONS MAY BE MEASURE WITH A TEST PIN WITH -.0000 TO +.0002 INCH TOLERANCE FOR A .952 INCH MINIMUM LENGTH.
2. THE PROTECTIVE CAP (SEE FIGURE 1) MINIMIZES DAMAGE TO THE TIP AND IMPROVES PERSONNEL SAFETY. IF LOST, CONTACT THE QUALIFIED SUPPLIER FOR REPLACEMENT.
3. TOOL SHALL BE USED TO REMOVE CONTACTS IN MIL-DTL-28840 CONNECTORS.
4. AS81969/34 SUPERSEDES MIL-I-81969/34F (EC). THE PART NUMBER REMAINS UNCHANGED.

SPECIFICATION NOTES:

1. REVISION INDICATOR:

   A CHANGE BAR (I) LOCATED IN THE LEFT MARGIN IS FOR THE CONVENIENCE OF THE USER IN LOCATING AREAS WHERE TECHNICAL REVISIONS, NOT EDITORIAL CHANGES, HAVE BEEN MADE TO THE PREVIOUS ISSUE OF THIS DOCUMENT. AN (R) SYMBOL TO THE LEFT OF THE DOCUMENT TITLE INDICATES A COMPLETE REVISION OF THE DOCUMENT, INCLUDING TECHNICAL REVISIONS. CHANGE BARS AND (R) ARE NOT USED IN ORIGINAL PUBLICATIONS, NOR IN DOCUMENTS THAT CONTAIN EDITORIAL CHANGES ONLY.

AVA Documents
Document Sharing Hub
Full document details: SAE AS81969_34A