FEDERAL SUPPLY CLASS
5935

RATIONALE

AS95234/13A IS BEING STABILIZED BECAUSE THE PROCESSES/PRODUCT IS CONSIDERED MATURE AND THE COMMITTEE DOES NOT ANTICIPATE FUTURE TECHNICAL CHANGES. STABILIZATION DOES NOT IMPLY THE PROCESS OR PRODUCT IS UNACCEPTABLE FOR APPLICATIONS FOR WHICH IT IS DESIGNED. ANY TECHNICAL CHANGES NOTED BY A SUPPLIER OR USER WHICH RESULTS IN A PRODUCT OR REQUIREMENT CHANGE WILL BE ADDRESSED BY A NEW REVISION. A QUALIFIED SUPPLIER IS STILL MAINTAINED.

STABILIZED NOTICE

THIS DOCUMENT HAS BEEN DECLARED "STABILIZED" BY SAE AE-8C1 CONNECTORS COMMITTEE AND WILL NO LONGER BE SUBJECTED TO PERIODIC REVIEWS FOR CURRENCY. USERS ARE RESPONSIBLE FOR VERIFYING REFERENCES AND CONTINUED SUITABILITY OF TECHNICAL REQUIREMENTS. NEWER TECHNOLOGY MAY EXIST.

ISSUED 2014-02 REAFFIRMED 2019-03 STABILIZED 2025-09

For more information on this standard, visit
https://www.sae.org/standards/content/AS95234/13A/

THIRD ANGLE PROJECTION

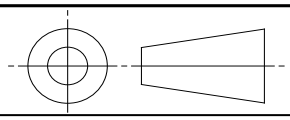

CUSTODIAN: AE-8C1

PROCUREMENT SPECIFICATION: AS95234

AEROSPACE STANDARD

CONNECTOR RECEPTACLE,
REVERSE BAYONET COUPLING,
BULKHEAD FEED-THRU

AS95234™/13

REV. A

SAE Executive Standards Committee Rules provide that: " This report is published by SAE to advance the state of technical and engineering sciences. The use of this report is entirely voluntary, and its applicability and suitability for any particular use, including any patent infringement arising therefrom, is the sole responsibility of the user."

SAE reviews each technical report at least every five years at which time it may be revised, reaffirmed, stabilized, or cancelled. SAE invites your written comments and suggestions.

Copyright © 2025 SAE International
All rights reserved. No part of this publication may be reproduced, stored in a retrieval system, transmitted, in any form or by any means, electronic, mechanical, photocopying, recording, or otherwise, or used for text and data mining, AI training, or similar technologies, without the prior written permission of SAE.

TO PLACE A DOCUMENT ORDER: **Tel: 877-606-7323 (inside USA and Canada)** **Tel: +1 724-776-4970 (outside USA)**
Fax: 724-776-0790 **Email: CustomerService@sae.org** **SAE WEB ADDRESS: http://www.sae.org**

Documents Document Sharing Hub
Full document details: SAE AS95234_13A

NOTICE

THE COMPLETE REQUIREMENTS FOR PROCURING THE PRODUCT DESCRIBED HEREIN SHALL CONSIST OF THIS DOCUMENT AND THE LATEST ISSUE OF AS95234.

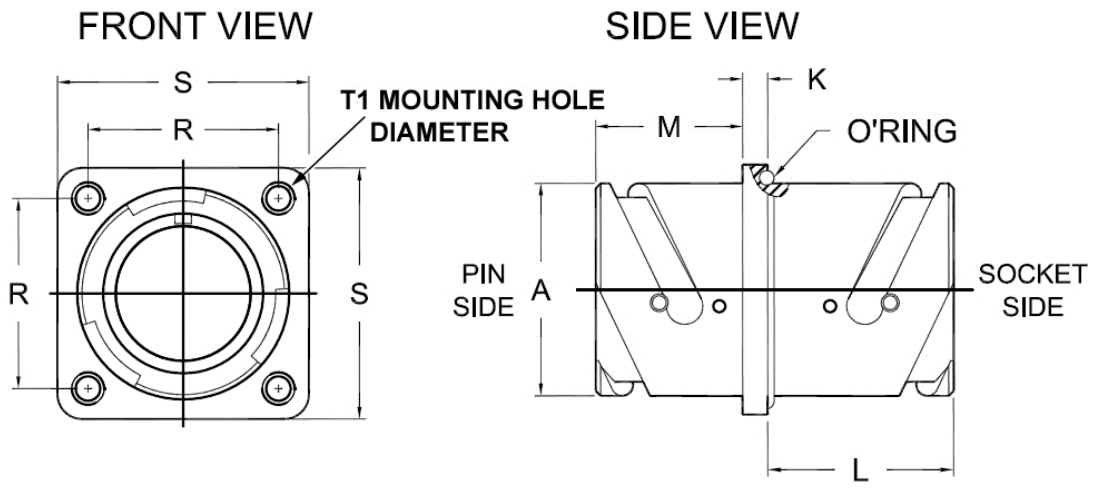

FIGURE 1 - CONNECTOR RECEPTACLE, BULKHEAD FEED-THRU

AVA Documents
Document Sharing Hub

Full document details: SAE AS95234_13A