REV. B

AS9598

FEDERAL SUPPLY CLASS
5340

RATIONALE

THIS DOCUMENT HAS BEEN DETERMINED TO CONTAIN BASIC AND STABLE TECHNOLOGY WHICH IS NOT DYNAMIC IN NATURE. THIS STANDARD HAS BEEN STABILIZED.

STABILIZED NOTICE

THIS DOCUMENT HAS BEEN DECLARED "STABILIZED" BY THE SAE E-25 GENERAL STANDARDS FOR AEROSPACE AND PROPULSION SYSTEMS COMMITTEE AND WILL NO LONGER BE SUBJECTED TO PERIODIC REVIEWS FOR CURRENCY. USERS ARE RESPONSIBLE FOR VERIFYING REFERENCES AND CONTINUED SUITABILITY OF TECHNICAL REQUIREMENTS. NEWER TECHNOLOGY MAY EXIST.

SAE Technical Standards Board Rules provide that: "This report is published by SAE to advance the state of technical and engineering sciences. The use of this report is entirely voluntary, and its applicability and suitability for any particular use, including any patent infringement arising therefrom, is the sole responsibility of the user."

SAE reviews each technical report at least every five years at which time it may be revised, reaffirmed, stabilized, or cancelled. SAE invites your written comments and suggestions.

ISSUED 1998-02 REVISED 2005-03 STABILIZED 2014-02

SAE values your input. To provide feedback on this Technical Report, please visit http://www.sae.org/technical/standards/AS9598B

THIRD ANGLE PROJECTION

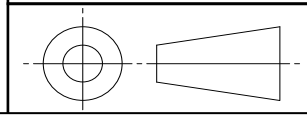

CUSTODIAN: E-25

AEROSPACE STANDARD

BRACKET, ANGLE 90°, CADMIUM PLATED,
ALLOY STEEL UNS G41300,
.190 X .312 BOLT

AS9598

REV. B

Copyright 2014 SAE International
All rights reserved. No part of this publication may be reproduced, stored in a retrieval system or transmitted, in any form or by any means, electronic, mechanical, photocopying, recording, or otherwise, without the prior written permission of SAE.

TO PLACE A DOCUMENT ORDER: **Tel: 877-606-7323 (inside USA and Canada)** **Tel: +1 724-776-4970 (outside USA)**
Fax: 724-776-0790 **Email: CustomerService@sae.org** **SAE WEB ADDRESS: http://www.sae.org**

Documents Document Sharing Hub
Full document details: SAE AS9598B

THE INITIAL SAE PUBLICATION OF THIS DOCUMENT WAS TAKEN DIRECTLY FROM U.S. MILITARY STANDARD MS9598C. THIS SAE STANDARD RETAINS THE SAME PART NUMBERS ESTABLISHED BY THE ORIGINAL MILITARY DOCUMENT.

ANY REQUIREMENTS ASSOCIATED WITH QUALIFIED PRODUCTS LISTS (QPL) MAY CONTINUE TO BE MANDATORY FOR DOD CONTRACTS. REQUIREMENTS RELATING TO QPL'S HAVE NOT BEEN ADOPTED BY THE SAE FOR THIS STANDARD AND ARE NOT PART OF THIS SAE DOCUMENT.

WARNING

THIS DOCUMENT INCLUDES CADMIUM AS A PLATING MATERIAL. THE USE OF CADMIUM HAS BEEN RESTRICTED AND/OR BANNED FOR USE IN MANY COUNTRIES DUE TO ENVIRONMENTAL AND HEALTH CONCERNS. THE USER SHOULD CONSULT WITH LOCAL OFFICIALS ON THE ENVIRONMENTAL AND HEALTH REGULATIONS REGARDING ITS USE.

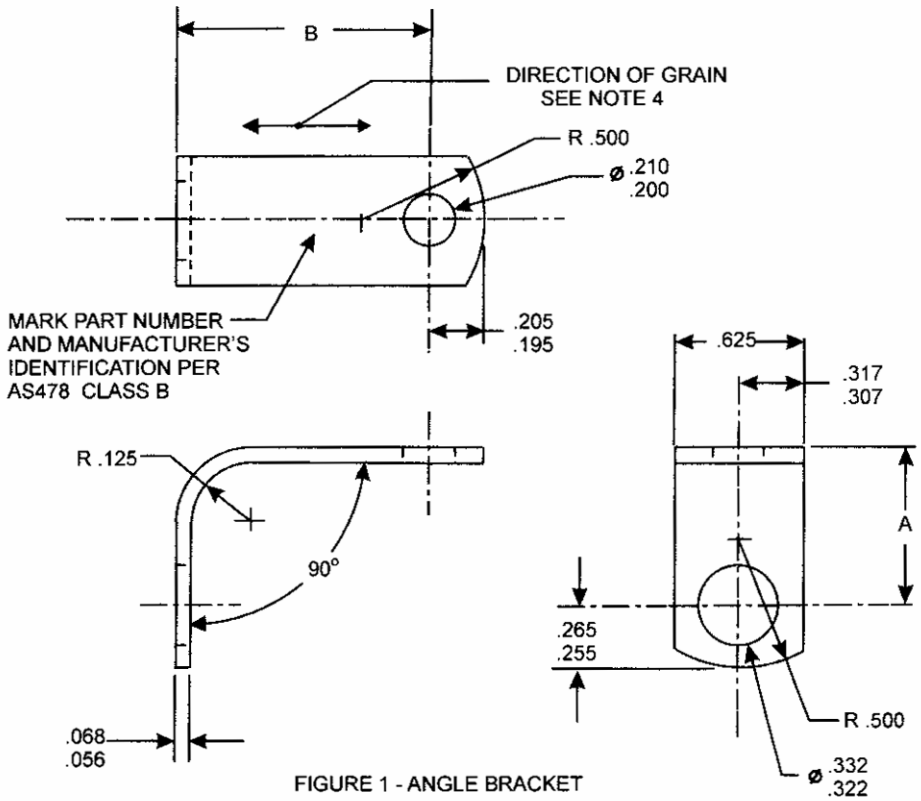

FIGURE 1 - ANGLE BRACKET

SAE INTERNATIONAL	**AEROSPACE STANDARD** BRACKET, ANGLE 90°, CADMIUM PLATED, ALLOY STEEL UNS G41300, .190 X .312 BOLT	**AS9598** SHEET 1 OF 3	**REV. B**

AVA Documents
Document Sharing Hub
Full document details: SAE AS9598B