SAE International™

SURFACE VEHICLE STANDARD

J1113-24

REV. OCT2006

Issued 2000-05
Revised 2006-10

Superseding J1113-24 MAY2000

Immunity to Radiated Electromagnetic Fields; 10 kHz to 200 MHz—Crawford TEM Cell and 10 kHz to 5 GHz—Wideband TEM Cell

RATIONALE

The May 2000 version of SAE J1113-24 is being updated to reflect the latest information regarding the test.

1. SCOPE

This part of SAE J1113 specifies the transverse electromagnetic mode (TEM) cell test methods and procedures for testing the electromagnetic immunity of electronic components (DUTs) for passenger cars, commercial vehicles and similar applications. Methods using the constant cross-section TEM cell (Crawford TEM) and the flared cross-section TEM cell (wideband TEM) are discussed in the document. The electromagnetic disturbance considered in this part of SAE J1113 will be limited to continuous narrowband electromagnetic fields. TEM cells produce both electric and magnetic fields simultaneously. The test is directly applicable to DUTs whose height is less than 1/3 the septum height; somewhat larger modules can be tested with conditions applied. The Crawford TEM and wideband TEM cell may be used for testing within the 1/3 height condition without demonstrating field uniformity within the cell, if the test set-up complies with the other provisions of this standard.

This test can be used for two purposes:

a. Testing the immunity of DUTs with major field coupling to the DUT and wiring harness;

b. Testing the immunity of DUTs with major field coupling to the DUT.

The methods defined in this document have some significant differences from ISO 11452-3. Careful deliberation has been given to the need to diverge from the international standard. The primary differences are the method of bringing leads from the DUT out of the TEM cell and the inclusion of the wideband TEM cell.

Immunity measurements of complete vehicles are generally only possible by the vehicle manufacturer. The reasons, for example, are the high costs of a vehicle sized absorber lined chamber, preserving the secrecy of prototypes or the large number of different vehicle models. Therefore, the TEM cell is useful for research, development, and quality control. This test method is also required by many vehicle manuafcturers.

2. REFERENCES

2.1 Applicable Publications

The following publications form a part of this specification to the extent specified herein. Unless otherwise indicated, the latest version of SAE publications shall apply.

SAE Technical Standards Board Rules provide that: "This report is published by SAE to advance the state of technical and engineering sciences. The use of this report is entirely voluntary, and its applicability and suitability for any particular use, including any patent infringement arising therefrom, is the sole responsibility of the user."

SAE reviews each technical report at least every five years at which time it may be reaffirmed, revised, or cancelled. SAE invites your written comments and suggestions.

Copyright © 2006 SAE International

All rights reserved. No part of this publication may be reproduced, stored in a retrieval system or transmitted, in any form or by any means, electronic, mechanical, photocopying, recording, or otherwise, without the prior written permission of SAE.

TO PLACE A DOCUMENT ORDER: **Tel: 877-606-7323 (inside USA and Canada)**
Tel: 724-776-4970 (outside USA)
Fax: 724-776-0790
Email: CustomerService@sae.org

SAE WEB ADDRESS: http://www.sae.org

Documents
Document Sharing Hub

Full document details: SAE J1113_24_200610

2.1.1 SAE Publication

Available from SAE, 400 Commonwealth Drive, Warrendale, PA 15096-0001, Tel: 877-606-7323 (inside USA and Canada) or 724-776-4970 (outside USA), www.sae.org.

SAE J1113-1 Electromagnetic Compatibility Measurement Procedures and Limits for Vehicle Components (Except Aircraft) (60 Hz to 18 GHz)—General and Definitions

2.1.2 IEEE Publications

Available from IEEE, 445 Hoes Lane, Piscataway, NJ 08854-1331, Tel: 732-981-0060, www.ieee.org.

IEEE 1309 IEEE Standard Method for the Calibration of Electromagnetic Field Sensors and Field Probes, Excluding Antennas, from 9 kHz to 40 GHz

Symposium Record, 1990 International Symposium on EMC

2.1.3 ISO Publication

Available from ANSI, 25 West 43rd Street, New York, NY 10036-8002, Tel: 212-642-4900, www.ansi.org.

ISO 11452-3:2001 Road vehicles—Electrical disturbances by narrow-band radiated electromagnetic energy—Component test methods—Transverse electromagnetic mode (TEM) cell

2.2 Related Publication

The following publication is for information purposes only and is not a required part of this document.

2.2.1 ISO Publication

Available from ANSI, 25 West 43rd Street, New York, NY 10036-8002, Tel: 212-642-4900, www.ansi.org.

ISO 7637 Road vehicles—Electrical disturbance by conduction and coupling—Part 2: Vehicles with nominal 12 V or 24 V supply voltage—Electrical transient conduction along supply lines only

3. DEFINITIONS

See SAE J1113-1 for definitions

4. TEST CONDITIONS

See SAE J1113-1 for standard test temperature, test voltage, dwell time, modulation, test signal quality and frequency step considerations

4.1 Frequency Range and Modulation

The upper frequency limit of the Crawford TEM cell is a direct function of the TEM cell dimensions and design. The upper frequency of a wideband TEM cell is not so constrained. For testing automotive electronic systems it is typical to use:

a. A Crawford TEM cell from 10 kHz to 200 MHz

NOTE 1: The upper frequency limit of the Crawford TEM cell can be increased by appropriate installation of RF absorbing material.

NOTE 2: The dimensions for suggested Crawford TEM cells are in Table B1 in Appendix B.

b. A wideband TEM cell from 10 kHz to 5 GHz.

Documents
Document Sharing Hub
Full document details: SAE J1113_24_200610

NOTE: A TEM cell can be used to establish impulsive waveforms for immunity testing by using an appropriate wave-form generator connected to the cell's input port, assuming the frequency content of the wave form meets the roll off requirement of 5.2.

The TEM cell can be used to perform the CW, AM, FM or Pulse modulations. For the AM and Pulse modulations, the amplitude is constant peak relative to CW.

4.2 Test Severity Levels

The user should specify the test severity level(s) over the frequency range. Suggested test severity levels are included in Appendix A of this document.

These test severity levels for amplitude modulated signals are expressed in terms of equivalent rootmeansquare (rms) value of an unmodulated wave.

5. TEST INSTRUMENT DESCRIPTION AND SPECIFICATIONS

5.1 TEM Cell

The TEM cell used in this test method is a rectangular cross-section coaxial line with a 50 Ω characteristic impedance, as shown in Figure 1 or 2. The DUT is exposed to a uniform TEM field.

The TEM cell is a laboratory measurement system. It can be used to generate test fields within 2 dB of the theoretical value if the DUT does not occupy an excessive portion of the test volume (see 5.3).

The TEM cell method has an advantage of not radiating energy into the surrounding space.

The TEM cell can be symmetric with equal distances from the floor of the cell to the septum and the septum to the top of the cell or the configuration may be asymmetric with the septum offset to provide a larger DUT test region.

The significant differences between the Crawford and wideband cells are that the wideband TEM typically has a higher frequency range and is asymmetrical, and the field strength varies as a function of longitudinal position. See Appendix B for tutorial information on both the Crawford and the wideband TEM cells.

Documents
Document Sharing Hub

Full document details: SAE J1113_24_200610

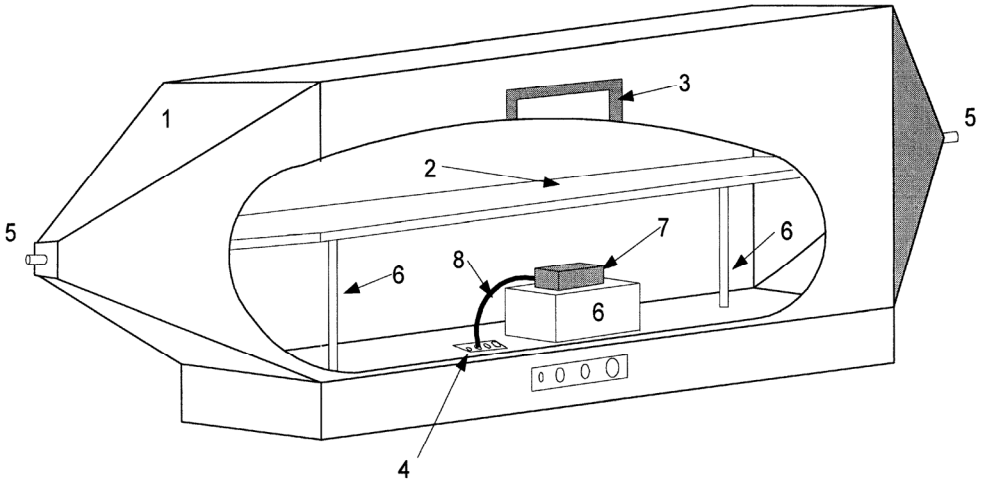

Legend

1 outer shield
2 septum (inner conductor)
3 Access door
4 Filtered connector panel - recommended location: bottom of cell at side corner (See Appendix B)
5 Coaxial connectors
6 Dielectric support ($\varepsilon_r \leq$ 1.4)
7 DUT
8 Input/output power leads

FIGURE 1 - CRAWFORD TEM CELL

Documents
Document Sharing Hub
Full document details: SAE J1113_24_200610

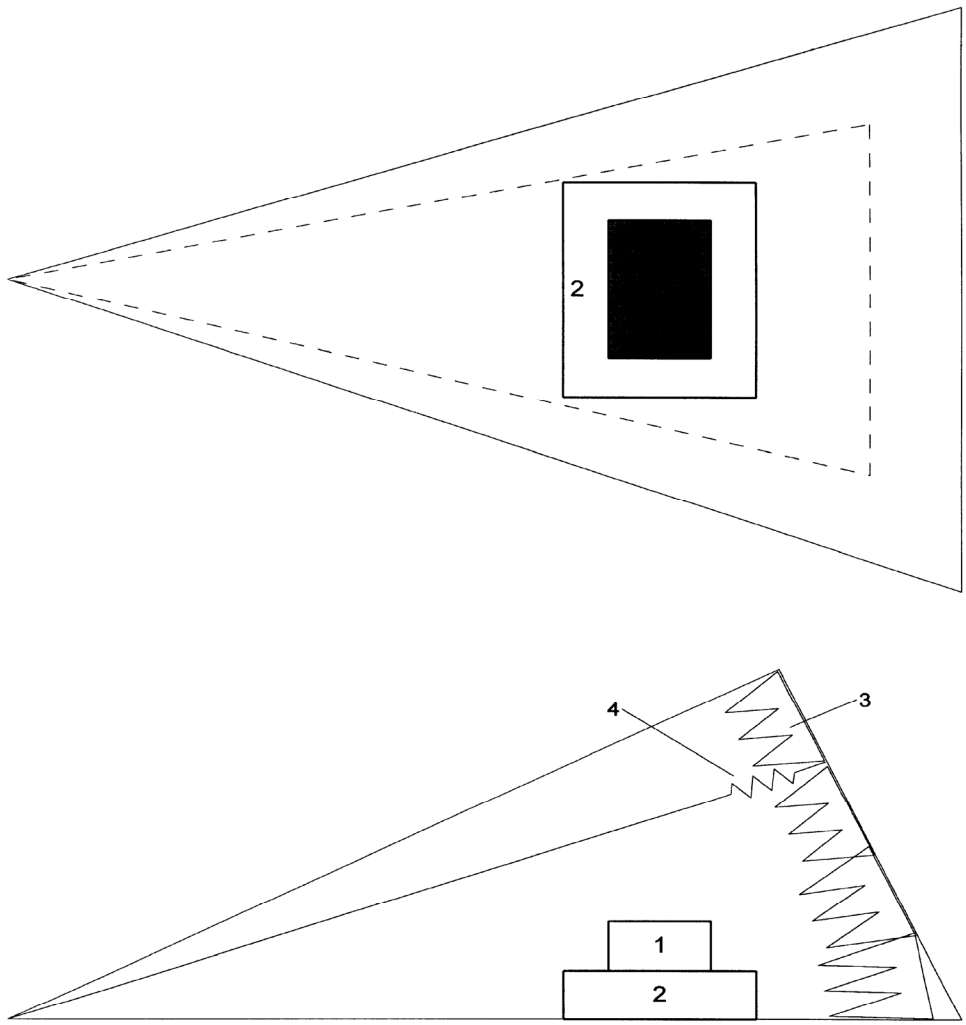

Legend

1 DUT
2 Dielectric material ($\varepsilon_r \leq$ 1.4)
3 RF absorbing material
4 RF load elements

FIGURE 2 - WIDEBAND TEM CELL

5.2 Instrumentation

Figure 3 shows an example of a TEM cell test setup. The TEM cell has significant resonances in the region greater than the recommended upper useful frequency. A low pass filter with an attenuation of at least 20 dB at frequencies above 1.5 times of the cutoff frequency of the TEM cell (e.g., 200 MHz TEM Cell: 20 dB for frequencies greater than 300 MHz) shall be installed between the amplifier and the dual directional coupler, to eliminate harmonic energy produced by the amplifier from being fed to the TEM cell. If the amplitude of the amplifier's 2nd harmonic is less the 20 dB than the fundmental signal, the low pass filter may be eliminated. The maximum amplier power for generating the highest field strength level (i.e., 200 V/m) shall be applied to evaluate the harmonic requirements.

Documents
Document Sharing Hub
Full document details: SAE J1113_24_200610

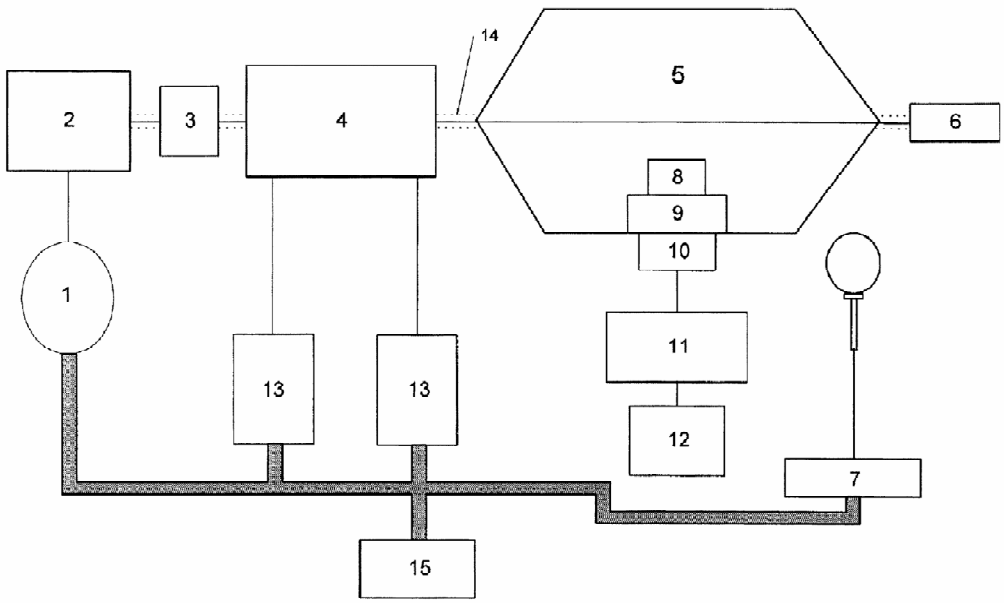

Legend
1 Signal generator
2 Broadband amplifier
3 Low pass filter for Crawford Cell only
4 Dual directional coupler (DDC)(-30 dB coupling ratio minimum)
5 Crawford TEM cell (shown) or alternately a wideband TEM cell
6 High power load (50 Ω) (Integral to the wideband TEM cell)
7 E-field Probe (placed in cell for verification measurement)
8 DUT
9 Dielectric support
10 Filtered connector panel - See Appendix B for recommended filter design
11 Peripheral(s)
12 Power supply
13 Power meters or dual input power meter
14 Coaxial transmission line (as short as practical)
15 Test controller (optional)

FIGURE 3 - EXAMPLE OF TEM CELL TEST CONFIGURATION

5.3 Calibration

5.3.1 Power Measurement

The power meters and the dual directional coupler are the most critical of the equipment used in this test relative to calibration. The loss for both the dual directional coupler and cables (if applicable) shall be considered making the power measurements.

5.3.2 TEM Cell Characteristics

The impedance characteristics of both the TEM cell and the wideband TEM cell should be measured to determine the useful range of the cell. The termination or load for the TEM cell shall be attached and included in the measurements.

NOTE: Crawford and wideband cells within their useful range will typically exhibit a VSWR of 1.5:1 or less.

Documents
Document Sharing Hub
Full document details: SAE J1113_24_200610