SURFACE VEHICLE RECOMMENDED PRACTICE

J2425™	JAN2026

Issued 1998-01
Revised 2021-11
Reaffirmed 2026-01

Superseding J2425 NOV2021

(R) Steering Control Systems - Heavy Trucks

RATIONALE

This revision adds the requirements section, incorporating acceptance criteria from FMVSS 203 and CMVSR 203. A test method is developed for evaluation to these standards. Recognizing that heavy-truck steering wheels are used by drivers as a point of contact during entry and egress, a quasi-static force requirement is added as a practical consideration that must be balanced with energy absorption.

SAE J2425 has been reaffirmed to comply with the SAE Five-Year Review policy.

1. SCOPE

This SAE Recommended Practice describes a laboratory test procedure and requirements for evaluating the characteristics of heavy-truck steering control systems under simulated driver impact conditions, as well as driver entry/egress conditions. The test procedure employs a torso-shaped body block that is impacted against the steering wheel.

2. REFERENCES

2.1 Applicable Documents

The following publications form a part of this specification to the extent specified herein. Unless otherwise indicated, the latest issue of SAE publications shall apply.

2.1.1 SAE Publications

Available from SAE International, 400 Commonwealth Drive, Warrendale, PA 15096-0001, Tel: 888-875-3976 (inside USA and Canada) or +1 724-772-4086 (outside USA), www.sae.org.

SAE J211-1 Instrumentation for Impact Test - Part 1: Electronic Instrumentation

SAE J211-2 Instrumentation for Impact Test - Part 2: Photographic Instrumentation

SAE J944A Steering Control System - Passenger Car - Laboratory Test Procedure

CRP-013 Heavy Truck Crashworthiness - Phase III

SAE Executive Standards Committee Rules provide that: "This report is published by SAE to advance the state of technical and engineering sciences. The use of this report is entirely voluntary, and its applicability and suitability for any particular use, including any patent infringement arising therefrom, is the sole responsibility of the user."

SAE reviews each technical report at least every five years at which time it may be revised, reaffirmed, stabilized, or cancelled. SAE invites your written comments and suggestions.

Copyright © 2026 SAE International

All rights reserved. No part of this publication may be reproduced, stored in a retrieval system, transmitted, in any form or by any means, electronic, mechanical, photocopying, recording, or otherwise, or used for text and data mining, AI training, or similar technologies, without the prior written permission of SAE.

TO PLACE A DOCUMENT ORDER: **Tel: 1-877-606-7323 (U.S. and Canada only)**
Tel: 1-724-776-4970 (outside U.S. and Canada)
Fax: 724-776-0790
Email: CustomerService@sae.org
SAE WEB ADDRESS: **http://www.sae.org**

For more information on this standard, visit
https://www.sae.org/standards/content/J2425_202601/

Documents Sharing Hub

Full document details: SAE J2425_202601

2.1.2 Other Publications

49 CFR 399.207 Truck and Truck-Tractor Access Requirements

49 CFR 571.203 Impact Protection for the Driver From the Steering Control System

C.R.C c.1038 CMVSR 203, Driver Impact Protection and Steering Control System

3. DEFINITIONS

3.1 STEERING CONTROL SYSTEM

The basic steering mechanism and its associated trim hardware, including any portion of a steering column assembly that provides energy absorption upon impact.

4. REQUIREMENTS

4.1 The steering control system shall be constructed in such a manner that no component or attachment—including horn actuating mechanisms, airbag, and trim hardware—can catch the driver's clothing or jewelry during normal driving maneuvers. Jewelry includes a watch, a ring, or a bracelet other than a bracelet with loosely attached or dangling members. When tested according to this recommended practice, surrogate jewelry shall not remain engaged with the steering control system when a force of 22 N (5.0 lbf) is applied to it.

4.1.1 Adaptive equipment may be added to steering control systems to enable vehicle control by individual drivers with reduced mobility or dexterity. Such equipment is exempt from the S4.1 requirement provided the heavy truck is used principally by the individual driver for which the adaptive equipment is designed.

4.2 When tested in accordance with this recommended practice, the impact force applied to the body block by the steering control system shall not exceed 11120 N (2500 lbf), except for intervals whose cumulative duration is not more than 3 ms.

4.3 When mounted as it would be installed in a vehicle, the steering control system shall withstand a quasi-static force application of 1112 N ± 10 N (250 lbf ± 2.25 lbf) with less than 5 mm plastic deformation.

5. TEST PROCEDURES

5.1 For all tests, the steering control system shall be mounted in the actual vehicle, vehicle buck, or on a fixture that is at least as rigid as the actual vehicle mounting.

5.2 Surrogate Jewelry Assessment

5.2.1 The wire loops shown in Figure 1 shall represent rings, watches, and bracelets without dangling members. The threaded portion shall connect to a hand-held force gage using a swiveling, universal joint attachment.

5.2.2 In the case of an adjustable steering control system, the test will be made with the steering control system adjusted to the manufacturer's design position. If the manufacturer's design position is not known, a location midway between the limits of its range of adjustment can be used. Other positions may be tested based on engineering judgement.

5.2.3 Determine if any component or attachment hardware of the steering control system—including the horn actuating mechanism, airbag, or trim hardware—can catch on the wire loop.

5.2.4 If the wire loop can catch, use a hand-held force gage to pull on the loop in a tangential direction relative to the steering wheel's rotational axis. Pull on the loop using a smooth, continuous slow motion. Repeat test three times. If possible, repeat this step in the opposite tangential direction.

Documents
Document Sharing Hub
Full document details: SAE J2425_202601

5.2.5 Repeat procedure from 5.2.4 at each location where the wire loop can catch.

5.2.6 Repeat procedure from 5.2.2 through 5.2.5 using other wire loop.

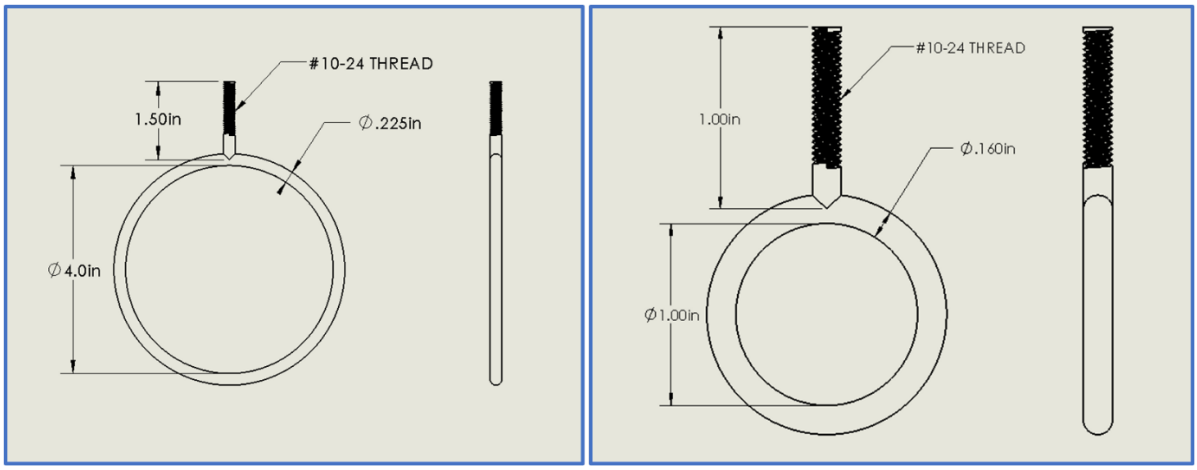

Figure 1 - Surrogate jewelry wire loops

5.3 Impact Test

5.3.1 It is recommended that the steering wheel be turned so that its most rigid spoke is aligned with the direction of the impact velocity thus producing the highest force on the body block.

5.3.2 In the case of an adjustable steering control system, the test will be made with the steering control system adjusted to the manufacturer's design position. If the manufacturer's design position is not known, a location midway between the limits of its range of adjustment can be used. Other positions may be tested based on engineering judgement.

5.3.3 The body block at impact is positioned vertically as shown in Figure 2. The body block is centered laterally in relation to the steering wheel hub. The vertical relationship between the steering wheel and the body block shall be such that the center of gravity of the body block is at the same level as the lower edge of the steering wheel rim at impact, within ±25 mm (±1 inch). The vertical launch position shall account for anticipated vertical fall during free flight, to assure the proper body block position at impact.

5.3.4 All parts under test shall be installed using the design attachment points and production parts or simulations thereof torqued to the proper value. In the case of the addition of a load cell between the steering wheel and steering column as stated in 6.2, the attachment design and torque shall be represented as well as possible.

5.3.5 The propulsion system shall be positioned relative to the steering control system so that the body block is in free flight at impact while minimizing the body block's vertical fall during free flight due to gravity.

5.3.6 All parts and the body block shall be stabilized at an ambient temperature ranging between 20 °C ± 5 °C (60 to 77 °F) for 4 hours immediately prior to testing.

Documents
Document Sharing Hub
Full document details: SAE J2425_202601