SURFACE VEHICLE RECOMMENDED PRACTICE

J2945™/1A	MAR2026

Issued 2020-07
Stabilized 2026-03

Superseding J2945/1A JUL2020

Vehicle Level Validation Test Procedures
for V2V Safety Communications

RATIONALE

This document is stable and not expected to change in the near term.

STABILIZED NOTICE

This document has been declared “STABILIZED” by SAE V2X Core Technical Committee and will no longer be subjected to periodic reviews for currency. Users are responsible for verifying references and continued suitability of technical requirements. Newer technology may exist.

SAE Executive Standards Committee Rules provide that: “This report is published by SAE to advance the state of technical and engineering sciences. The use of this report is entirely voluntary, and its applicability and suitability for any particular use, including any patent infringement arising therefrom, is the sole responsibility of the user.”

SAE reviews each technical report at least every five years at which time it may be revised, reaffirmed, stabilized, or cancelled. SAE invites your written comments and suggestions.

Copyright © 2026 SAE International

All rights reserved. No part of this publication may be reproduced, stored in a retrieval system, transmitted, in any form or by any means, electronic, mechanical, photocopying, recording, or otherwise, or used for text and data mining, AI training, or similar technologies, without the prior written permission of SAE.

TO PLACE A DOCUMENT ORDER: **Tel: 1-877-606-7323 (U.S. and Canada only)**
Tel: 1-724-776-4970 (outside U.S. and Canada)
Fax: 724-776-0790
Email: CustomerService@sae.org
SAE WEB ADDRESS: http://www.sae.org

For more information on this standard, visit
https://www.sae.org/standards/content/J2945/1A_202603/

Documents Document Sharing Hub
Full document details: SAE J2945_1A_202603

TABLE OF CONTENTS

1. SCOPE 4
1.1 Purpose 5

2. REFERENCES 5
2.1 Applicable Documents 5
2.1.1 SAE Publications 5
2.2 Related Publications 6

3. TERMS AND DEFINITIONS 6
3.1 Definitions 6
3.2 Abbreviations and Acronyms 7

4. TEST PROCEDURE STRUCTURE 8
4.1 Overview 8
4.2 Test Systems and Tools Suite 9
4.3 Data Collection Procedures 11
4.3.1 Stationary Vehicle Data Collection 12
4.3.2 Moving Vehicle Data Collection 14
4.3.3 Congestion Control Data Collection 22
4.3.4 Transmit Coverage Data Collection 24
4.3.5 Receiver Sensitivity Data Collection 34
4.4 Data Analysis Procedure 35

5. DATA COMPLIANCE VERIFICATION PROCEDURES 35
5.1 Standards Profiles (STD) 36
5.1.1 IEEE 802.11 (802.11) 36
5.1.2 IEEE 1609.2 (1609.2) 36
5.1.3 IEEE 1609.3 (1609.3) 36
5.1.4 IEEE 1609.4 (1609.4) 36
5.1.5 IEEE 1609.12 (1609.12) 36
5.1.6 SAE J2735 (J2735) 36
5.1.7 FCC 47 CFR, Parts 0, 1, 2, and 95 (Informative) 39
5.2 Positioning and Timing Requirements (POSTIM) 39
5.2.1 Position Determination (POSDETR) 39
5.2.2 Wide Area Augmentation System (WAAS) 39
5.2.3 Coordinate System and Reference (COORDSYSREF) 40
5.2.4 System Time Coordination (SYSTIMCOORD) 40
5.3 BSM Transmission Requirements on Channel vChannelNumber (BSMTX) 41
5.3.1 BSM Contents (BSMCONT) 41
5.3.2 Channel and Data Rate (CHDATARATE) 43
5.3.3 Generation of the First BSM after System Device Startup and Generation Timing (GENTIM) 43
5.3.4 User Priority and EDCA Settings (UPEDCA) 44
5.3.5 Minimum Transmission Criteria (MINTX) 44
5.3.6 Data Element Accuracy (DATAACC) 45
5.3.7 Data Persistency (DATAPERSIST) 63
5.3.8 BSM Scheduling and Congestion Control (CONGCTRL) 64
5.4 RF Performance Requirements (RFPERF) 66
5.4.1 DSRC Radiated Power and Transmit Power Accuracy (DSRCTX) 66
5.4.2 DSRC Receiver Sensitivity (DSRCRXSENS) 68
5.5 Security and Privacy Requirements (SECPRIV) 68
5.5.1 Identification Randomization (IDRAND) 68
5.5.2 BSM Signing (BSMSIGN) 69
5.5.3 Certificate Change (CERTCHG) 71
5.5.4 BSM Cryptographic Verification (BSMVERIFY) 72
5.5.5 Certificate Revocation (CERTREV) 72
5.6 Security Management (SECMGMT) 73

© SAE International DRAFT

AVA Documents Document Sharing Hub

6. TRACEABILITY MATRIX 73

7. NOTES 74
7.1 Revision Indicator 74

APPENDIX A TEST TOOL CAPABILITIES 75

APPENDIX B DSRC TRANSMIT COVERAGE TEST FACILITY CAPABILITIES 78

APPENDIX C TEST SYSTEM 79

APPENDIX D TEST SETUP, EXECUTION, AND RESULTS (INFORMATIVE) 80

Figure 1 Test systems and tools suite overview 9
Figure 2 1.75 mile test track with 0.5 mile straightaways 14
Figure 3 Hard-braking data collection 15
Figure 4 Clockwise moving data collection 16
Figure 5 Counterclockwise moving data collection 16
Figure 6 Modified figure eight moving data collection 18
Figure 7 Controlled deceleration and acceleration moving data collection 19
Figure 8 Security and privacy data collection 20
Figure 9 Path prediction data collection 21
Figure 10 Example facility for collecting data from DSRC transmit coverage tests 25
Figure 11 Transmit coverage data collection options 25
Figure 12 RF data collection in the left and right sectors (left graphic) and at multiple elevation angles (right graphic) 26
Figure 13 Direct radiated power measurement system 27
Figure 14 DSRC radiated power calibration setup 27
Figure 15 DSRC antenna coordinate system reference 29
Figure 16 Antenna gain measurement system 30
Figure 17 DSRC gain calibration setup 30
Figure 18 CLoss test configuration (note that some power meters have an internal sensor) 32
Figure 19 Transmit power range test configuration (note that modern power meters may not require a sensor) 33

Table 1 SAE J2945/1 sections currently in scope 4
Table 2 Test systems and tools suite descriptions 10
Table 3 Data collection procedures 11
Table 4 Procedure #1, stationary vehicle data collection - base functionality 13
Table 5 Procedure #2, stationary vehicle data collection - power on 13
Table 6 Procedure #3, moving vehicle data collection - hard-braking behavior 15
Table 7 Procedure #4, moving vehicle data collection - data accuracy 16
Table 8 Procedure #5, moving vehicle data collection - persistence and low-speed operation 17
Table 9 Procedure #6, moving vehicle data collection - controlled deceleration and acceleration 19
Table 10 Procedure #7, moving vehicle data collection - security and privacy data collection 20
Table 11 Procedure #8 - moving vehicle data collection - path prediction data collection 21
Table 12 Procedure #9, stationary vehicle data collection - congestion control 22
Table 13 Congestion generation system parameter targets for stationary congestion control 23
Table 14 Procedure #10, moving vehicle data collection - congestion control event 23
Table 15 Congestion generation system parameter targets and driving descriptions for moving vehicle congestion control event 24
Table 16 Procedure #11, moving vehicle data collection - congestion control dynamic 24
Table 17 Congestion generation system parameter targets and driving descriptions for moving vehicle congestion control 24
Table 18 Transmit coverage data collection variables 26
Table 19 Procedure #12-1, DSRC radiated power data collection (DTC Option 1) 28
Table 20 Procedure #12-2a, antenna gain data collection (DTC Option 2) 31
Table 21 Procedure #12-2b, CLoss data collection (DTC Option 2) 33
Table 22 Procedure #13, DSRC transmit power accuracy data collection 34

© SAE International DRAFT

AVA Documents Document Sharing Hub

Table 23 Procedure #14, DSRC receiver sensitivity 34
Table 24 SAE J2735 compliance verification table 37
Table 25 Position determination compliance verification table 39
Table 26 Wide area augmentation system (WAAS) compliance verification table 39
Table 27 Coordinate system and reference compliance verification table 40
Table 28 System time coordination compliance verification table 40
Table 29 BSM contents compliance verification table 41
Table 30 Channel and data rate compliance verification table 43
Table 31 Generation of the first BSM after system device startup and generation timing compliance verification table 43
Table 32 User priority and EDCA settings compliance verification table 44
Table 33 Minimum transmission criteria compliance verification table 44
Table 34 Data element accuracy compliance verification table 45
Table 35 Data persistency compliance verification table 63
Table 36 Congestion control compliance verification table 64
Table 37 Test case conditions for stationary vehicle congestion control BSM TX compliance verification 65
Table 38 Test case conditions for moving vehicle congestion control event BSM TX compliance verification 65
Table 39 Test case conditions for moving vehicle congestion control dynamic BSM TX compliance verification 66
Table 40 DSRC radiated power and transmit power accuracy compliance verification table 66
Table 41 DSRC receive sensitivity compliance verification table 68
Table 42 Identification randomization compliance verification table 68
Table 43 BSM signing compliance verification table 69
Table 44 Certificate change compliance verification table 71
Table 45 Certificate revocation compliance verification table 72
Table 46 SAE J2945/1 requirements sections to test ID traceability summary 73

DRAFT
© SAE International

Documents
Document Sharing Hub

1. SCOPE

This document provides vehicle-level data collection, data analysis, and data verification procedures that may be used to verify that an instrument under test (IUT) satisfies the vehicle-level requirements specified in the SAE International (SAE) J2945/1 standard. For the purposes of this recommended practice, “vehicle-level requirements” primarily consist of those requirements which can be verified external to the vehicle. The IUT for these procedures is a configured dedicated short range communications (DSRC) vehicle-to-vehicle (V2V) device as defined in SAE J2945/1 and is installed on a light vehicle. While the IUT is conceptually separated from the vehicle it is installed on, the tests outlined in this document are primarily vehicle-level so the terms “vehicle” and “IUT” can generally be considered interchangeable. Additionally, non-vehicle-level complementary tests, not included in this document, are required to verify that the entire set of requirements specified in SAE J2945/1 is satisfied.

This document also includes a traceability matrix to provide traceability between SAE J2945/1 sections and the test procedures. This can be used to ensure thoroughness of testing coverage.

The SAE J2945/1 sections that are included in the scope of this revision in this document are indicated in Table 1. SAE J2945/1 major section numbers that are indicated as N/A do not contain any requirements (subsections may include requirements). Sections that are not in scope, such as standards profiles, are expected to be tested and verified as part of device-level certification, prior to vehicle-level testing, which is the primary focus of this document.

Table 1 - SAE J2945/1 sections currently in scope

SAE J2945/1 Section Number	SAE J2945/1 Section Title	Included in Scope (w/ focus primarily on vehicle-level tests)
6.1	Standards Profiles	N/A
6.1.1	IEEE 802.11	N
6.1.2	IEEE 1609.2	N
6.1.3	IEEE 1609.3	N
6.1.4	IEEE 1609.4	N
6.1.5	IEEE 1609.12	N
6.1.6	SAE J2735	Y
6.1.7	FCC 47 CFR, Parts 0, 1, 2, and 95	N
6.2	Positioning and Timing Requirements	N/A
6.2.1	Position Determination	Y
6.2.2	Wide Area Augmentation System	Y
6.2.3	Coordinate System and Reference	Y
6.2.4	System Time Coordination	Y
6.3	BSM Transmission Requirements on Channel *vChannelNumber*	N/A
6.3.1	BSM Contents	Y
6.3.2	Channel and Data Rate	Y
6.3.3	Generation of the First BSM after System Device Startup and Generation Timing	Y
6.3.4	User Priority and EDCA Settings	Y
6.3.5	Minimum Transmission Criteria	Y
6.3.6	Data Element Accuracy	Y

© SAE International DRAFT

Documents Document Sharing Hub

SAE J2945/1 Section Number	SAE J2945/1 Section Title	Included in Scope (w/ focus primarily on vehicle-level tests)
6.3.7	Data Persistency	Y
6.3.8	BSM Scheduling and Congestion Control	Y
6.4	RF Performance Requirements	N/A
6.4.1	DSRC Radiated Power and Transmit Power Accuracy	Y
6.4.2	DSRC Receive Sensitivity	Y
6.5	Security and Privacy Requirements	N/A
6.5.1	Identification Randomization	Y
6.5.2	BSM Signing	Y
6.5.3	Certificate Change	Y
6.5.4	BSM Cryptographic Verification	N
6.5.5	Certificate Revocation	Y
6.6	Security Management	N/A
6.6.1	Bootstrap: Initialization and Enrollment Processing	N
6.6.2	Certificate Loading	N
6.6.3	Certificate Storage	N
6.6.4	Certificate Revocation List Loading	N
6.6.5	Secure Hardware	N

1.1 Purpose

The purpose of this document is to provide a set of vehicle-level validation test and data verification procedures that may be run to confirm the over-the-air interoperability of an IUT which has been developed to meet the SAE J2945/1 requirements.

2. REFERENCES

2.1 Applicable Documents

The following publications form a part of this specification to the extent specified herein. Unless otherwise indicated, the latest issue of SAE publications shall apply.

2.1.1 SAE Publications

Available from SAE International, 400 Commonwealth Drive, Warrendale, PA 15096-0001, Tel: 877-606-7323 (inside USA and Canada) or +1 724-776-4970 (outside USA), www.sae.org.

SAE J2735 Dedicated Short Range Communications (DSRC) Message Set Dictionary

SAE J2945 Dedicated Short Range Communication (DSRC) Systems Engineering Process Guidance for SAE J2945/X Documents and Common Design Concepts™

SAE J2945/1_202004 On-Board System Requirements for V2V Safety Communications

© SAE International DRAFT

Documents Document Sharing Hub

2.1.1.1 IEEE Publications

Available from IEEE Operations Center, 445 and 501 Hoes Lane, Piscataway, NJ 08854-4141, Tel: 732-981-0060, www.ieee.org.

IEEE Std 802.11-2012 Standard for LAN/MAN - Specific Requirements Part 11: Wireless LAN Medium Access Control (MAC) and Physical Layer (PHY) Specifications

IEEE Std 1609.2-2016 IEEE Standard for Wireless Access in Vehicular Environments - Security Services for Applications and Management Messages

IEEE Std 1609.3-2016 IEEE Standard for Wireless Access in Vehicular Environments (WAVE) - Networking Services

IEEE Std 1609.4-2016 IEEE Standard for Wireless Access in Vehicular Environments (WAVE) - Multi-Channel Operation

IEEE Std 1609.12-2016 IEEE Standard for Wireless Access in Vehicular Environments (WAVE) - Identifier Allocations

2.2 Related Publications

Refer to SAE J2945/1.

3. TERMS AND DEFINITIONS

3.1 Definitions

In addition to the SAE J2945/1 definitions, for the purposes of this recommended practice, the following definitions also apply.

3.1.1 COLLECTED DATA REPOSITORY

A digital storage location(s) which contains the data collected from executing a test procedure.

3.1.2 MANUFACTURER REPORT

A report provided by the manufacturer of the IUT/vehicle which contains the compliance status for a select set of SAE J2945/1 requirements that are in the pervue of the manufacturer to confirm compliance.

3.1.3 REFERENCE UNIT

A device which provides a known signal, message, or message content.

3.1.4 REMOTE VEHICLE

Refer to SAE J2945.

3.1.5 RUN

Execution steps of a test procedure.

3.1.6 SETUP

Preparation steps of a test procedure.

3.1.7 TEST DATA AND ANALYSIS RESULTS REPOSITORY

A digital storage location(s) which contains the data from the Collected Data Repository and the results produced from processing this data.

DRAFT © SAE International

AVA Documents Document Sharing Hub

3.1.8 TEST FACILITY

A site or sites that offer the requisite driving areas and equipment for performing the vehicle-level validation test procedures contained in this recommended practice.

3.2 Abbreviations and Acronyms

The abbreviations and acronyms cited below are terms used in this recommended practice.

ASN.1	Abstract Syntax Notation One
AUT	Antenna Under Test
BSM	Basic Safety Message
CBP	Channel Busy Percentage
CFR	Code of Federal Regulations
CLoss	Cable and Connector Loss
CW	Continuous Wave
DSRC	Dedicated Short Range Communications
EDCA	Enhanced Distributed Channel Access
FCC	Federal Communications Commission
GNSS	Global Navigation Satellite System
GPS	Global Positioning System
GUI	Graphical User Interface
HDOP	Horizontal Dilution of Precision
ID	Identifier
IEEE	Institute of Electrical and Electronics Engineers
IUT	Instrument Under Test
ITU	International Telecommunication Union
MAC	Medium Access Control
OBE	On-Board Equipment
OER	Octet Encoding Rules
PCAP	Packet Capture Application Protcol
PER	Packet Error Ratio
QPSK	Quadrature Phase Shift Keying
RF	Radio Frequency

DRAFT
© SAE International

Documents
Document Sharing Hub

RP	Radiated Power
RV	Remote Vehicle
3D	Three-Dimensional
Tx	Transmit
2D	Two-Dimensional
UDP	User Datagram Protocol
UPER	Unaligned Packed Encoding Rules
UTC	Coordinated Universal Time
VSWR	Voltage Standing Wave Ratio
V2V	Vehicle-to-Vehicle
WAAS	Wide Area Augmentation System
WAVE	Wireless Access in Vehicular Environments
WGS-84	World Geodetic System 1984
WSM	WAVE Short Message

4. TEST PROCEDURE STRUCTURE

4.1 Overview

Two categories of test procedures are provided in this recommended practice. The first consists of a set of procedures which primarily rely on the transmitted basic safety messages (BSMs) for data analysis and requirements validation. The second consists of a set of procedures to test and validate the radio frequency (RF) performance requirements. These test procedures have been developed with the following goals in mind:

- To the extent possible, the procedures should be tool agnostic.
- The procedures should be designed for an installed and configured deployment-ready device.
- The procedures should be designed such that tampering with hardware, firmware, or software is prohibited.

NOTE: Given the nature of the RF testing, some of the RF test procedures may require direct access to the IUT. It would be up to the certifying test organization and/or test facility to work with the manufacturer regarding this.

These test procedures are structured such that the tests can be run in a serial manner or in parallel. The data and logs captured during the vehicle-level testing can be processed by data analysis tools that output verification results for assembly into a test report.

Data collection procedures are provided to clearly describe and sequence the steps needed to operate the IUT and vehicle during data collection. These procedures are listed in 4.3. A high-level data analysis procedure describes how to analyze the data collected in order to generate compliance tables as shown in 4.4. Note that the parameter settings for parameters identified in italicized text in the test procedures (e.g., *vChannelNumber*) are contained in SAE J2945/1 section 7.

© SAE International DRAFT

Documents Document Sharing Hub

Full document details: SAE J2945_1A_202603

4.2 Test Systems and Tools Suite

The following test procedures assume that a suite of approved and validated test systems and tools are utilized to support the data collection and analysis processes. An illustration of the test systems and tools suite is provided in Figure 1 and is followed by Table 2, which provides a high-level description of the systems and tools. Depending on the test center, a particular "system" or "tool" may be one test apparatus, or many, consisting of a collection of hardware and software components which support the execution of various scripts and programs. Or some of the "systems" or "tools" could be combined into a single system or tool. They are separated this way to highlight the key components; however, the procedures in this recommended practice are not binding on which is used—rather, it would be up to the certifying test organization and/or test facility to determine. The key capabilities for these test systems and tools are included in Appendix A. A potential use-case diagram utilizing these systems and tools is illustrated in Appendix C.

NOTE: The RF systems and tools are not included in Figure 1, as a good representation of these are provided in the various figures contained in the RF data collection procedure (4.3.4 and 4.3.5).

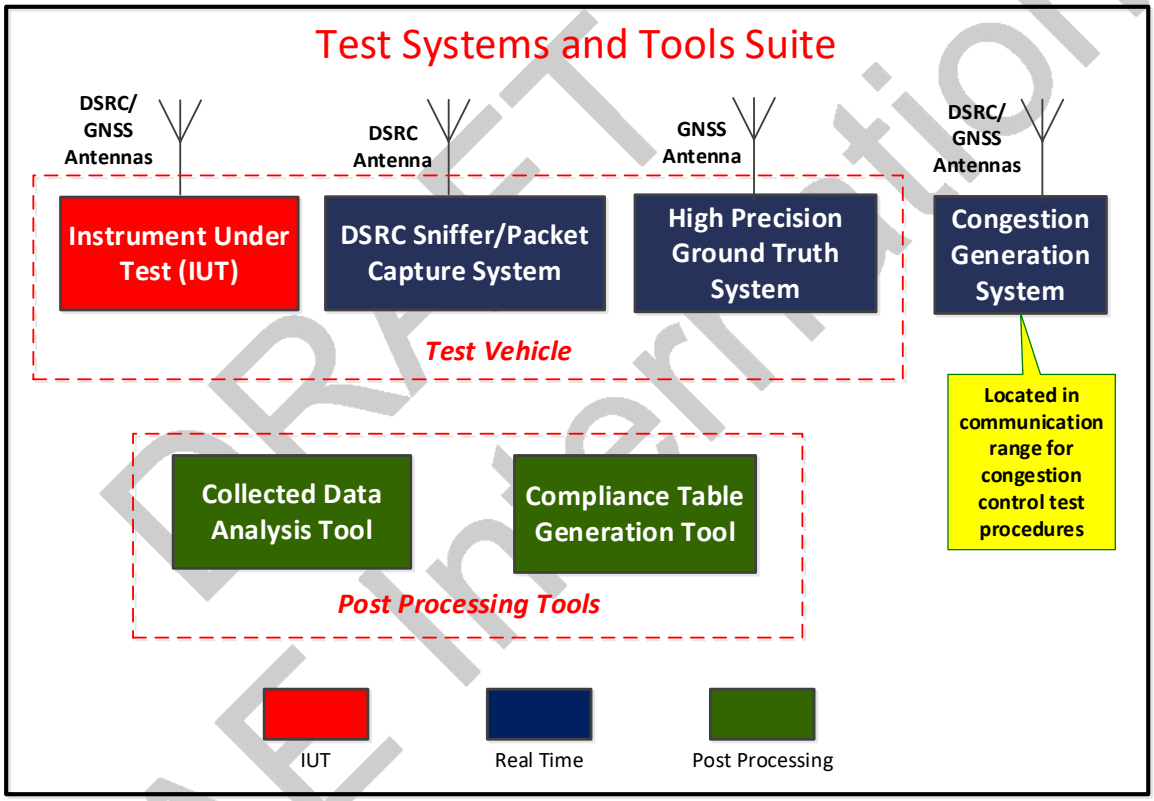

Figure 1 - Test systems and tools suite overview

© SAE International DRAFT

Documents
Document Sharing Hub

Table 2 - Test systems and tools suite descriptions

Test Systems/Tools	Description	In Test Vehicle?	Tool Type
DSRC Sniffer/Packet Capture System	A system that is compliant with the relevant IEEE Standards (802.11, 1609.x) such that it can capture DSRC packets on *vChannelNumber* and timestamp and log each packet with the corresponding UTC time it was received. See Appendix A, Table A1 for the key capabilities.	Y	Real Time
High Precision Ground Truth System	A system that can be placed on a moving vehicle to capture high precision, UTC timestamped, position and motion data. See Appendix A, Table A2 for the key capabilities.	Y	Real Time
Congestion Generation System	A system located within communication range of the test vehicle which is representative of multiple transmitting RVs and capable of creating repeatable congestion scenarios for validating the congestion control. See Appendix A, Table A3 for the key capabilities.	Optional	Real Time
Collected Data Analysis Tool	A tool that can process individual or sets of data collected by the DSRC Sniffer/Packet Capture System and High Precision Ground Truth System. It can: • Parse and decode the messages that are contained in the captured packets. • Verify the message content against message set constraints defined by the SAE J2735 messages, data frames, and data elements definitions in conjunction with the SAE J2945/1 requirements. • Verify performance requirements that are related to vehicle motion (e.g., positioning accuracy, heading, speed, path history, path prediction, and event flags). • Verify performance requirements that are related to congestion control (e.g., transmit interval, transmit power). • Verify performance requirements that are related to security and privacy (e.g., randomization, certificate signing, certificate changing). • Has the capability to process sets of data (e.g., all packets captured during a test session) or individual packets. This tool may also provide an analysis report as well as anomalies identified. See Appendix A, Table A4 for the key capabilities.	N	Post Processing
Compliance Table Generation Tool	A tool that can process the test results provided by the Collected Data Analysis Tool to produce and populate a set of compliance tables for the non-manufacturer supplied test data requirements. See Appendix A, Table A5 for the key capabilities.	N	Post Processing
Power Meter and Sensor	Measurement sensor used to accurately measure output power at the antenna connector of a radio.	N	Real Time
DSRC Transmit Coverage Test Facility	Environment used to execute DSRC transmit coverage tests. See Appendix B, Table B1 for the key capabilities.	N	Real Time

Before testing can begin, the test tools must be properly calibrated and adjusted, according to the manufacturer or test lab procedures, to ensure accurate measurements. The calibration process may differ from system to system.

© SAE International DRAFT

Documents Document Sharing Hub

4.3 Data Collection Procedures

Prior to execution of the data collection procedures the following should be obtained from the device manufacturer:

- A report which contains the test status of all requirements that are marked with "D" in the "DC Procedure" column of the compliance verification tables contained in Section 5.
- A list of which permissible data elements/data frames in SAE J2945/1 Table 19 - BSM Part I: Minimum criteria for BSM transmission and Table 20 - BSM Part II: Minimum criteria for BSM transmission are not supported.
- If (1) maintaining the heading below *vHeadLatchThresh* with the required accuracy is supported, or (2) latching of the heading is supported. Refer to SAE J2945/1 requirements [6.3.6-V2V-BSMTX-DATAACC-022] and [6.3.6-V2V-BSMTX-DATAACC-023].

A list of data collection procedures is given in Table 3 and is detailed in the following sub-sections.

Table 3 - Data collection procedures

Procedure	Purpose
Procedure #1: Stationary Vehicle Data Collection - Base Functionality (DC-BASE)	Collect data pertaining to baseline behaviors and BSM structure for a stationary vehicle.
Procedure #2: Stationary Vehicle Data Collection - Power On (DC-PWR)	Collect BSMs transmitted immediately after IUT startup.
Procedure #3: Moving Vehicle Data Collection - Hard-Braking Behavior (DC-EVNT)	Collect data that will be used to verify the hard-braking event flag is set appropriately in the BSM during a hard-braking event.
Procedure #4: Moving Vehicle Data Collection - Data Accuracy (DC-ACCU)	Collect BSMs transmitted by the IUT from a moving vehicle. The collected data will be used to determine compliance with data element accuracy requirements.
Procedure #5: Moving Vehicle Data Collection - Persistence and Low-Speed Operation (DC-LSPD)	Collect data pertaining to IUT data persistence and low-speed behavior by selectively causing the heading of the vehicle to latch and unlatch in different directions.
Procedure #6: Moving Vehicle Data Collection - Controlled Deceleration and Acceleration (DC-CDA)	Collect data pertaining to IUT deceleration and acceleration.
Procedure #7: Moving Vehicle Data Collection - Security and Privacy Data Collection (DC-SECPRIV)	Collect data pertaining to security and privacy requirements.
Procedure #8: Moving Vehicle Data Collection - Path Prediction (DC-PATHPRED)	Collect data pertaining to IUT path prediction.
Procedure #9: Stationary Vehicle Data Collection - Congestion Control (DC-SVCC)	Validate congestion control for stationary vehicle data collection.
Procedure #10: Moving Vehicle Data Collection - Congestion Control EVNT (DC-MVCC-EVNT)	Validate congestion control for moving vehicle data collection (critical events).
Procedure #11: Moving Vehicle Data Collection - Congestion Control Dynamic (DC-MVCC-DYN)	Validate congestion control for moving vehicle data collection (vehicle dynamics).
Procedure #12-1: DSRC Radiated Power Data Collection (DC-DTC Option 1)	Measure vehicle-level, DSRC-radiated power (RP) around vehicle periphery at max transmit power setting.

DRAFT © SAE International

Documents Document Sharing Hub

Full document details: SAE J2945_1A_202603

Procedure	Purpose
Procedure #12-2a: Antenna Gain Data Collection (DC-DTC Option 2)	Measure vehicle-level antenna gain around the vehicle periphery.
Procedure #12-2b: CLoss Data Collection (DC-DTC Option 2)	Measure the cable and connector loss (CLoss) between the DSRC radio and the antenna. NOTE: DSRC radiated power will be calculated based on measurements made in Procedures 12-2a, 12-2b, and 13.
Procedure #13: DSRC Transmit Power Accuracy Data Collection (DC-DTPA)	Measure the IUT transmitter power output over the required range of power settings.
Procedure #14: DSRC Receiver Sensitivity (DC-DRS)	Measure the IUT receiver sensitivity.

4.3.1 Stationary Vehicle Data Collection

4.3.1.1 Stationary Vehicle Test Configuration

This data collection environment shall be a vehicle at a location where global navigation satellite system (GNSS) including at least global positioning system (GPS) signals are available (repeated or simulated) or outside in open-sky conditions. The vehicle will be analyzed in this environment to determine minimum functionality prior to further testing. This functionality includes proper transmission of SAE J2945/1-compliant BSMs. Further testing will be performed for requirements that do not require a moving vehicle, such as identifier (ID) randomization, device startup, and device shutdown.

4.3.1.2 Stationary Vehicle Data Collection Procedures

The stationary vehicle test procedures are Procedure #1: DC-BASE (Table 4) and Procedure #2: DC-PWR (Table 5).

NOTE: The following procedures use the DSRC Sniffer/Packet Capture System and Collected Data Analysis Tool to capture and decode/interpret BSMs transmitted by the IUT. Testers should verify that BSMs are being captured and decoded prior to running the collection procedures.

DRAFT © SAE International

Documents Document Sharing Hub

Table 4 - Procedure #1, stationary vehicle data collection - base functionality

Procedure #1: DC-BASE	**Est. Time: 10 minutes**
Purpose	Collect data pertaining to baseline behaviors and BSM structure for a stationary vehicle. This test does not require a specific kind of track.
1. Setup	Ensure IUT is operating where GNSS, including GPS, signals are available or in open-sky conditions.
2. Setup	Enable the DSRC Sniffer/Packet Capture System.
3. Run	Turn the IUT on to enable transmissions.
4. Run	If available, activate the following indicator lights one at a time, allowing at least 5 seconds between enabling and disabling each indicator and noting the time of each activation/deactivation. • Low beam headlights • High beam headlights • Left turn signal • Right turn signal • Hazard lights • Fog lights • Parking lights
5. Run	While the vehicle is stationary and in park, press the brake pedal down then release the brake pedal five times, allowing at least 5 seconds between each cycle. For manual transmissions, perform the procedure while in neutral.
6. Run	Hold the vehicle in brake and cycle through the transmission states of the vehicle in the following sequence, allowing at least 5 seconds between each transmission state. • Park • Reverse • Neutral • Drive
7. Run	Verify the collected data is complete and save the collected data from the DSRC Sniffer/Packet Capture System to the Collected Data Repository.

Table 5 - Procedure #2, stationary vehicle data collection - power on

Procedure #2: DC-PWR	**Est. Time: 20 minutes**
Purpose	Collect BSMs transmitted immediately after IUT startup. This test does not require a specific kind of track.
1. Setup	Ensure IUT is operating where GNSS, including GPS, signals are available or in open-sky conditions.
2. Setup	Enable the DSRC Sniffer/Packet Capture System and keep the Sniffer/Packet Capture System running throughout the course of the procedure.
3. Setup	Turn the IUT on to enable transmissions.
4. Run	Wait for the IUT to complete startup. Note that the exact time differs between devices and must be provided by the manufacturer ahead of time.
5. Run	Turn the IUT off and wait for the IUT to complete shutdown. Note that the exact time differs between devices and must be provided by the manufacturer ahead of time.
6. Run	Repeat for five cycles.
7. Run	Verify the collected data is complete and save the collected data from the DSRC Sniffer/Packet Capture System to the Collected Data Repository.

© SAE International DRAFT

Documents Document Sharing Hub

4.3.2 Moving Vehicle Data Collection

4.3.2.1 Moving Vehicle Test Configuration

As described in SAE J2945/1, vehicles can use many forms of augmentation to accurately determine their position and vehicle dynamics. Therefore, a practical set of steps is used to collect the data to test the IUT's conformance to the requirements for BSM contents such as speed, acceleration, heading, position, path prediction, path history, and event flags.

These steps should be conducted in a test area that satisfies the open-sky and flat road conditions as specified in SAE J2945/1. Additionally, this area must be safe and able to handle vehicle speeds up to at least 110 km/h, with enough room to allow deceleration to trigger a hard-braking event. Tire pressure for each vehicle should be at its specified level before collecting the data. An example of this environment is shown in Figure 2. It should be stressed that only data collection is addressed in this configuration. The SAE J2945/1 requirements will be verified upon analysis of the recorded data.

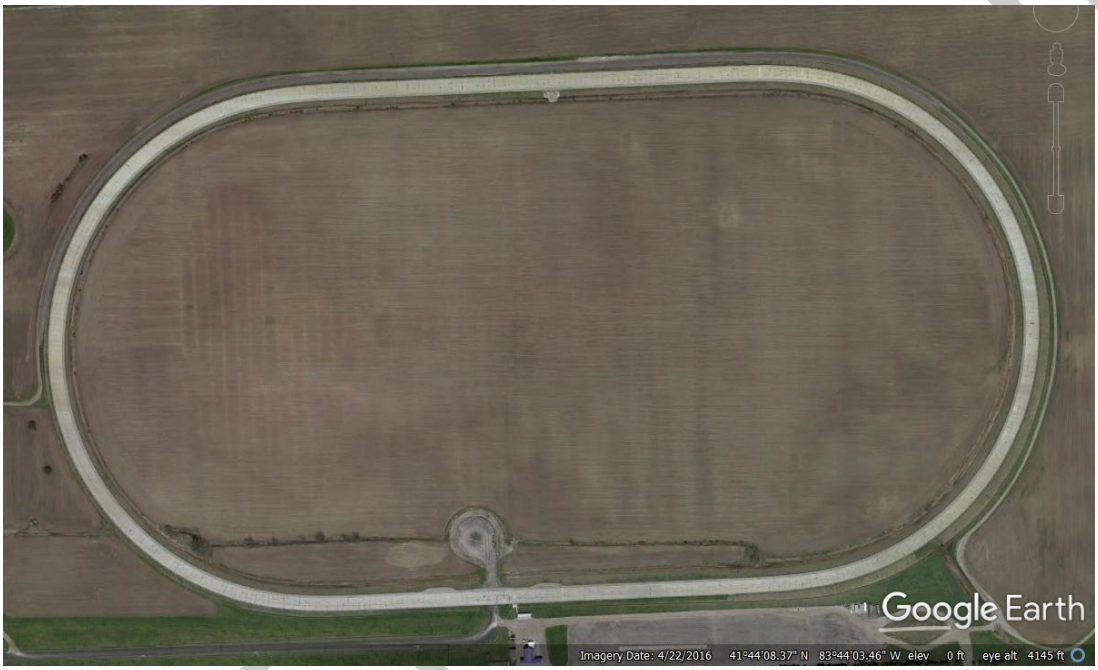

Figure 2 - 1.75 mile test track with 0.5 mile straightaways

4.3.2.2 Moving Vehicle Data Collection Procedures

Procedures #3 through #7 are the moving test procedures and are outlined in the following tables and figures.

NOTE: The following procedures use the DSRC Sniffer/Packet Capture System and Collected Data Analysis Tool to capture and decode/interpret BSMs transmitted by the IUT. Testers should verify that BSMs are being captured and decoded prior to running the data collection procedures.

© SAE International

Documents
Document Sharing Hub
Full document details: SAE J2945_1A_202603

Table 6 - Procedure #3, moving vehicle data collection - hard-braking behavior

Procedure #3: DC-EVNT	**Est. Time: 10 minutes**
Purpose	Collect data that will be used to verify the hard-braking event flag is set appropriately in the BSM during a hard-braking event. This data collection procedure only requires a straight track long enough to accommodate a hard-braking event.
1. Setup	Verify the High Precision Ground Truth System is calibrated and operational.
2. Setup	Enable the DSRC Packet Capture System.
3. Run	Enable the High Precision Ground Truth System.
4. Run	Turn the IUT on to enable transmissions.
5. Run	Accelerate to 95 km/h ± 5 km/h, then apply sufficient braking to produce a deceleration in excess of >0.4 g at Point 1 to trigger a hard-braking event.
6. Run	Accelerate to 95 km/h ± 5 km/h, then apply sufficient braking to produce a deceleration in excess of >0.4 g at Point 2 to trigger a hard-braking event. NOTE: It is preferable to capture brake events in multiple directions.
7. Run	Verify the collected data is complete and save the collected data from the DSRC Packet Capture System and High Precision Ground Truth System to the Collected Data Repository.

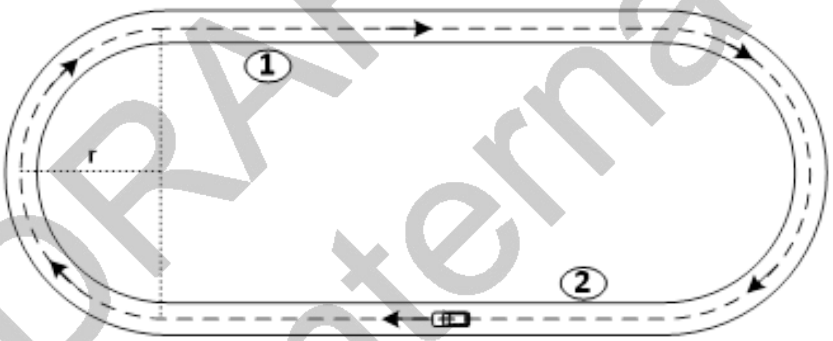

Figure 3 - Hard-braking data collection

DRAFT
© SAE International

Documents
Document Sharing Hub

Table 7 - Procedure #4, moving vehicle data collection - data accuracy

Procedure #4: DC-ACCU	**Est. Time: 25 minutes**
Purpose	Collect BSMs transmitted by the IUT from a moving vehicle. The collected data will be used to determine compliance with data element accuracy requirements. This test can be run on either a straight or oval track.
1. Setup	Verify that the High Precision Ground Truth System is installed, calibrated, and operational.
2. Setup	Enable the DSRC Sniffer/Packet Capture System.
3. Setup	Enable the High Precision Ground Truth System.
4. Setup	Turn the IUT on to enable transmissions.
5. Run	Drive vehicle at a speed 10 to 15 km/h below *vHeadingSpeedThresh* (refer to SAE J2945/1) on the course for at least 3 km. If possible, it is preferable to ensure that multiple left and right turns are taken. In the case of an oval test track, the vehicle should follow paths of at least 3 km each, if possible, in both clockwise and counter-clockwise directions (shown in Figures 4 and 5). Both left/right and/or clockwise/counter-clockwise directions are desired in order to verify that the path history and path prediction results are obtained regardless of direction/yaw-rate.
6. Run	Drive vehicle at a speed >60 km/h on the course for at least 3 km. If possible, it is preferable to ensure that multiple left and right turns are taken. In the case of an oval test track, the vehicle should follow paths of at least 3 km each, if possible, in both clockwise and counter-clockwise directions (shown in Figures 4 and 5). Both left/right and/or clockwise/counter-clockwise directions are desired in order to verify that the path history and path prediction results are obtained regardless of direction/yaw-rate.
7. Run	Verify the collected data is complete and save the collected data from the DSRC Sniffer/Packet Capture System and High Precision Ground Truth System to the Collected Data Repository.

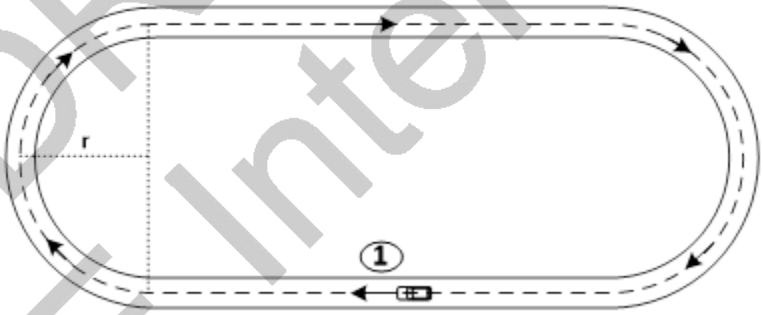

Figure 4 - Clockwise moving data collection

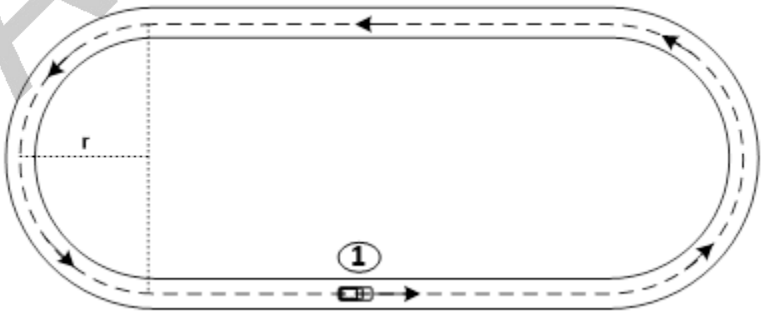

Figure 5 - Counterclockwise moving data collection

© SAE International DRAFT

Documents
Document Sharing Hub

Table 8 - Procedure #5, moving vehicle data collection - persistence and low-speed operation

Procedure #5: DC-LSPD	**Est. Time: 15 minutes**
Purpose	Collect data pertaining to IUT data persistence and low-speed behavior by selectively causing the heading of the vehicle to latch and unlatch in different directions. This test requires the track detailed in Figure 6.
1. Setup	Verify that the High Precision Ground Truth System is installed, calibrated, and operational.
2. Setup	Setup cones (or mark reference points) to create the configuration shown in Figure 6.
3. Setup	Enable DSRC Sniffer/Packet Capture System.
4. Setup	Enable the High Precision Ground Truth System.
5. Setup	Turn the IUT on to enable transmissions.
6. Run	Beginning at position 1 as shown in Figure 6, drive to position 3 at 20 km/h ± 5 passing between positions 2 and 6.
7. Run	At position 3, decelerate and keep the speed below 1.11 m/s (4 km/h) (*vHeadLatchThresh* per SAE J2945/1) to induce heading latch prior to the curve.
8. Run	At position 5, accelerate above 1.39 m/s (5 km/h) (*vHeadUnlatchThresh* per SAE J2945/1) to allow the heading to unlatch.
9. Run	At position 7, decelerate and keep the speed below 1.11 m/s (4 km/h) (*vHeadLatchThresh*) to induce heading latch prior to the curve.
10. Run	At position 1, accelerate above 1.39 m/s (5 km/h) (*vHeadUnlatchThresh*) to allow the heading to unlatch.
11. Run	Repeat steps 6 through 10 two more times to gather data for three complete cycles around the configuration.
12. Run	Verify the collected data is complete and save the collected data from the DSRC Sniffer/Packet Capture System and High Precision Ground Truth System to the Collected Data Repository.

DRAFT
© SAE International

Documents
Document Sharing Hub

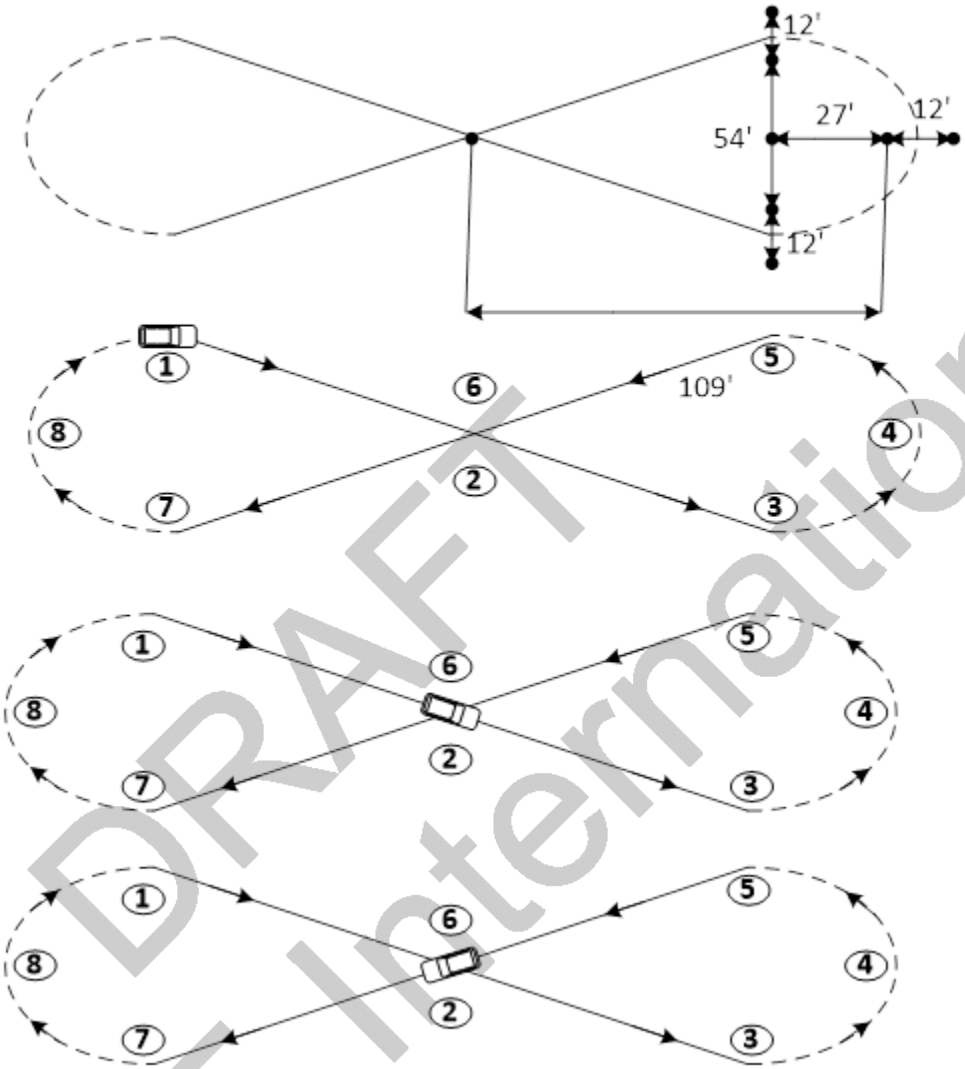

Figure 6 - Modified figure eight moving data collection

© SAE International DRAFT

Documents
Document Sharing Hub

Table 9 - Procedure #6, moving vehicle data collection - controlled deceleration and acceleration

Procedure #6: DC-CDA	**Est. Time: 20 minutes**
Purpose	Collect data pertaining to IUT deceleration and acceleration. This test requires an oval test track that can produce lateral as well as longitudinal acceleration changes.
1. Setup	Verify that the High Precision Ground Truth System is installed, calibrated, and operational.
2. Setup	Enable DSRC Sniffer/Packet Capture System.
3. Setup	Enable the High Precision Ground Truth System.
4. Setup	Turn the IUT on to enable transmissions.
5. Run	Drive to position 1 as shown in Figure 7 at with a speed of 95 km/h ± 5 km/h.
6. Run	At position 1, decelerate slowly (~-0.3 g or less) to a complete stop at position 2.
7. Run	At position 2, accelerate slowly (~0.15 g) to 95 km/h ± 5 km/h at position 3.
8. Run	Drive to position 4 at with a speed of 95 km/h ± 5 km/h.
9. Run	At position 4, decelerate slowly (~-0.3 g or less) to a complete stop at position 5.
10. Run	At position 5, accelerate slowly (~0.15 g) to 95 km/h ± 5 km/h at position 6.
11. Run	Repeat steps 5 through 10 for two more complete laps for a total of six acceleration runs and six deceleration runs.
12. Run	Verify the collected data is complete and save the collected data from the DSRC Sniffer/Packet Capture System and High Precision Ground Truth System to the Collected Data Repository.

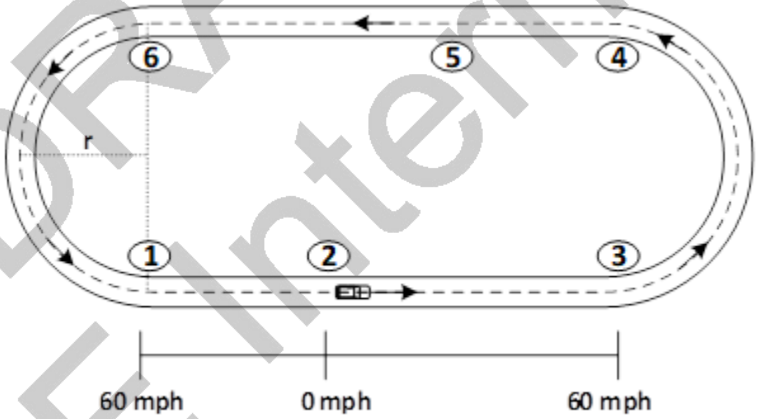

Figure 7 - Controlled deceleration and acceleration moving data collection

DRAFT
© SAE International

Documents
Document Sharing Hub
Full document details: SAE J2945_1A_202603

Table 10 - Procedure #7, moving vehicle data collection - security and privacy data collection

Procedure #7: DC-SECPRIV	**Est. Time: 35 minutes**
Purpose	Collect data pertaining to security and privacy.
1. Setup	Verify that the High Precision Ground Truth System is installed, calibrated, and operational.
2. Setup	Determine a route that will span >2 km from start to turnaround as illustrated in Figure 8.
3. Setup	Position vehicle at position 1.
4. Setup	Enable the High Precision Ground Truth System.
5. Setup	Enable DSRC Sniffer/Packet Capture System.
6. Run	At position 1, turn the IUT on to enable transmissions.
7. Run	Wait >5 minutes.
8. Run	Drive past position 2, located 2 km from position 1 measured point to point, to position 3, located >2.25 km from position 1 measured point to point, and stop.
9. Run	At position 3, turn vehicle around and drive to position 1, then continue to position 4, located 0.25 km past position 1 measured point to point.
10. Run	Wait 5 minutes.
11. Run	Verify the collected data is complete and save the collected data from the DSRC Sniffer/Packet Capture System and High Precision Ground Truth System to the Collected Data Repository.

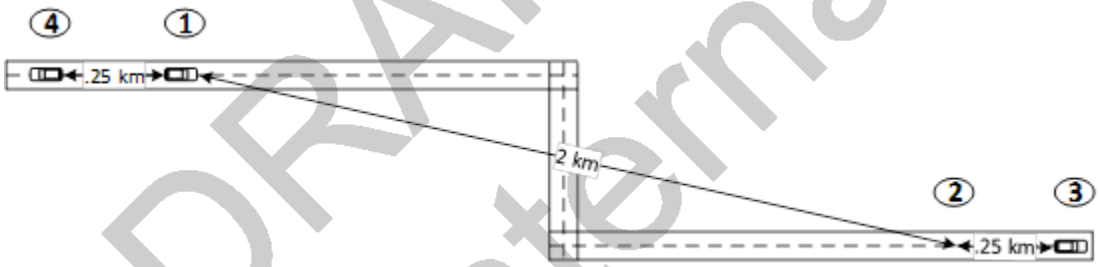

Figure 8 - Security and privacy data collection

DRAFT © SAE International

Documents
Document Sharing Hub
Full document details: SAE J2945_1A_202603

Table 11 - Procedure #8 - moving vehicle data collection - path prediction data collection

Procedure #8: DC-PATHPRED	**Est. Time: 15 minutes**
Purpose	Collect data pertaining to IUT path prediction. This test requires a circular test track with constant radius of at least 100 m.
1. Setup	Verify that the High Precision Ground Truth System is installed, calibrated, and operational.
2. Setup	Enable DSRC Sniffer/Packet Capture System.
3. Setup	Enable the High Precision Ground Truth System.
4. Setup	Turn the IUT on to enable transmissions.
5. Run	Drive to position 2 as shown in Figure 9 for surveying the entry point on the circular track. Set up cones around the spot.
6. Run	Drive to position 3 as shown in Figure 9 for surveying the exit point of the track. Set up cones around the spot.
7. Run	Drive to position 1 as shown in Figure 9 and drive towards the entry point cones at approximately 55 km/h. The path driven from position 1 to the entry point (position 2) must be along a straight line of a minimum distance of 100 m.
8. Run	After entering the circular track by driving through the entry point, complete at least two loops.
9. Run	Leave the circular track through the exit point by driving through the exit point at position 3 as shown in Figure 9.
10. Run	Steps 8 and 9 must be performed at constant speed.
11. Run	After exiting the path, stop the vehicle at point 4 as shown in Figure 9.
12. Run	Verify the collected data is complete and save the collected data from the DSRC Sniffer/Packet Capture System and High Precision Ground Truth System to the Collected Data Repository.

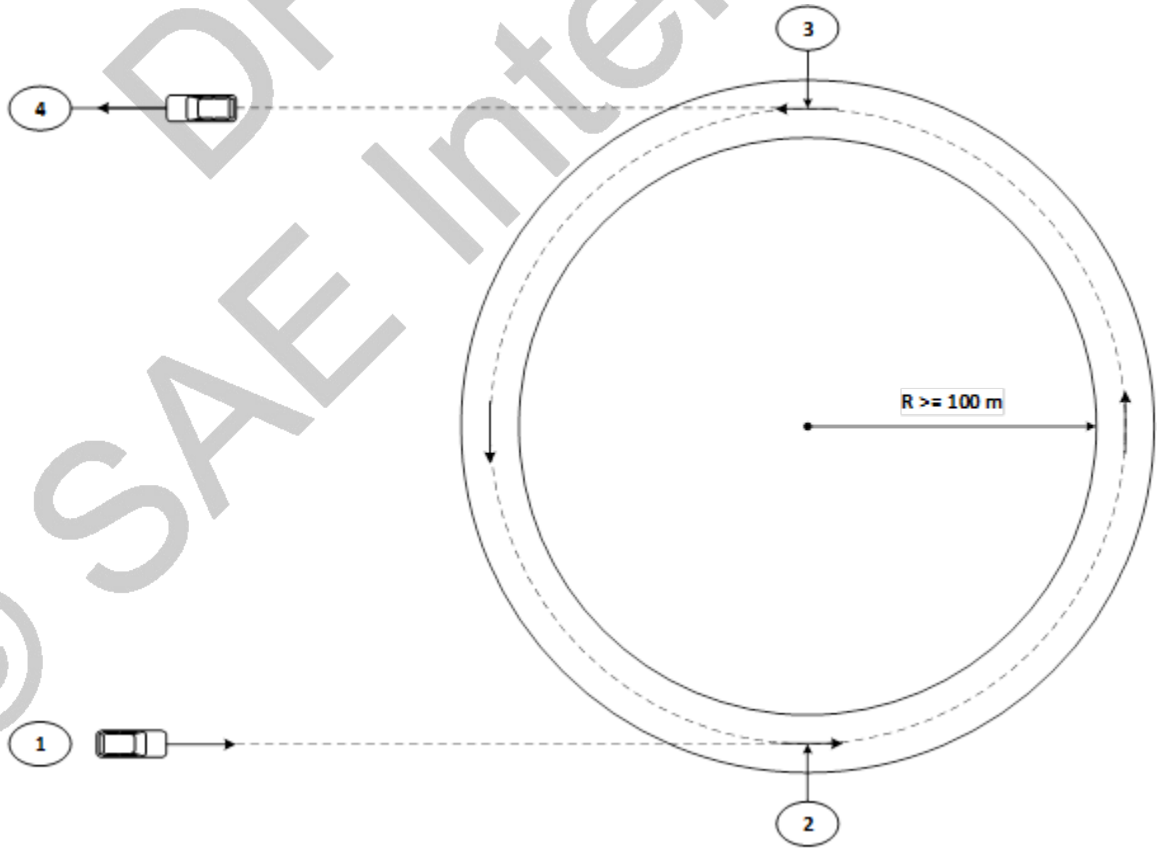

Figure 9 - Path prediction data collection

© SAE International DRAFT

Documents
Document Sharing Hub

4.3.3 Congestion Control Data Collection

Congestion control data collection requires a test environment which is representative of multiple remote vehicles (RVs) and is capable of creating repeatable congestion scenarios for validating the congestion control implementation in the IUT. One or more of the following needs to be controlled, depending on the test:

- Number of RVs within a specified range from the IUT.
- Target channel busy percentage (CBP).
- Target packet error ratio (PER) from the vehicles in range.

See Appendix A, Table A3 for the Congestion Generation System capabilities.

NOTE: To support vehicle-level congestion control validation, the BSMs transmitted by the IUT shall set the Transmit Power Used field in the Institute of Electrical and Electronics Engineers (IEEE) 1609.3 Wireless Access in Vehicluar Environments (WAVE) Short Message (WSM) header to the calculated RP in dBm, refer to calculated RP per 6.3.8.7 of SAE J2945/1. This should be verified before running these tests.

4.3.3.1 Stationary Vehicle Data Collection

Table 12 - Procedure #9, stationary vehicle data collection - congestion control

Procedure #9: DC-SVCC	**Est. Time: 10 minutes**
Purpose	Collect BSMs transmitted by the IUT in different congestion scenarios in a stationary vehicle.
1. Setup	Verify that the High Precision Ground Truth System is installed, calibrated, and operational.
2. Setup	Enable DSRC Sniffer/Packet Capture System.
3. Setup	Enable the High Precision Ground Truth System.
4. Setup	Turn on the IUT to enable transmissions and wait until it begins transmitting.
5. Run	Generate the congestion targets according to Table 13 for the first test case.
6. Run	Wait for a stable congestion scenario to be generated.
7. Run	Record data for a minimum of 30 seconds.
8. Run	Repeat steps 5 through 7 for the test cases 2 through 11.
9. Run	Verify the collected data is complete and save the collected data to the Collected Data Repository.

© SAE International DRAFT

Documents Document Sharing Hub

Table 13 - Congestion generation system parameter targets for stationary congestion control

Test Case	Congestion Generation System Targets		
	Target CBP	Target PER	Target Vehicle Density within *vPERRange* (N)
1	20	0	0
2	30	0	0
3	40	0	0
4	50	0	0
5	60	0	0
6	70	0	0
7	80	0	0
8	40	0	25
9	40	0	50
10	40	0	100
11	40	0	≥150

4.3.3.2 Moving Vehicle Data Collection

Some of the moving vehicle data collection shall be performed on a straight path and some on a circular track. If only an oval test track is available, analyze the data from the straight path separately from the portions while in the curve.

Table 14 - Procedure #10, moving vehicle data collection - congestion control event

Procedure #10: DC-MVCC-EVNT	**Est. Time: 15 minutes**
Purpose	Collect BSMs transmitted by the IUT in different congestion scenarios in a moving vehicle during critical event conditions.
1. Setup	Verify that the High Precision Ground Truth System is installed, calibrated, and operational.
2. Setup	Enable the High Precision Ground Truth System.
3. Setup	Generate the congestion targets according to Table 15 for the test case.
4. Run	Wait for a stable congestion scenario to be generated.
5. Run	Turn on the IUT to enable transmissions and wait until it begins transmitting.
6. Run	Enable the DSRC Sniffer/Packet Capture System and collect IUT BSMs for the duration of the test.
7. Run	Drive the vehicle as described in the “IUT Driving Description” column in Table 15.
8. Run	Verify the collected data is complete and save the collected data to the Collected Data Repository.

© SAE International DRAFT

Documents Document Sharing Hub

Table 15 - Congestion generation system parameter targets and driving descriptions for moving vehicle congestion control event

Test Case	Congestion Generation System Targets			IUT Driving Description
	Target CBP	Target PER	Target Vehicle Density within *vPERRange* (N)	
1	60	0	≥150	90 km/h, straight path for a minimum of 15 seconds, perform hard braking per SAE J2945/1.

Table 16 - Procedure #11, moving vehicle data collection - congestion control dynamic

Procedure #11: DC-MVCC-DYN	**Est. Time: 15 minutes**
Purpose	Collect BSMs transmitted by the IUT in different congestion scenarios in a moving vehicle.
1. Setup	Verify that the High Precision Ground Truth System is installed, calibrated, and operational.
2. Setup	Enable the High Precision Ground Truth System.
3. Setup	Turn on the IUT to enable transmissions and wait until it begins transmitting.
4. Setup	Enable the DSRC Sniffer/Packet Capture System and collect IUT BSMs for the duration of the test.
5. Setup	Generate the congestion targets according to Table 17 for the first test case.
6. Run	Wait for a stable congestion scenario to be generated.
7. Run	Drive the vehicle as described in the "IUT Driving Description" column in Table 17.
8. Run	Repeat steps 5 through 7 for the second test case.
9. Run	Verify the collected data is complete and save the collected data to the Collected Data Repository.

Table 17 - Congestion generation system parameter targets and driving descriptions for moving vehicle congestion control

Test Case	Congestion Generation System Targets			IUT Driving Description
	Target CBP	Target PER	Target Vehicle Density within *vPERRange* (N)	
1	60	0	≥150	55 km/h, circular track with 100 m radius for 90 seconds
2	60	0.3	≥150	55 km/h, circular track with 100 m radius for 90 seconds

4.3.4 Transmit Coverage Data Collection

This section defines the test procedures for measuring the transmit coverage of an IUT. An automotive test facility can be used to collect data associated with the transmit coverage around the periphery of a light vehicle. A typical test facility is shown in Figure 10. It is usually a commercial turnkey antenna measurement facility and can include RF measurement equipment, mechanical azimuth and elevation controllers and positioners, and a test computer and data processing software that interface to and control the equipment. Both spherical far-field and near-field test facilities can be used. RF data is typically collected (antenna gain data or RP data) on a vehicle while rotating on a turntable. Alternately, the vehicle can be stationary in a test area while RF probes are moved around it to collect the data. Measurements are made at the horizon and at elevations in a small range above and below the horizon. The white gantry arm in Figure 10 is used to make measurements across elevation, for example. The test facility must support acquisition and processing of RF data up to 6 GHz, which will be used for data verification.

© SAE International DRAFT

Documents Document Sharing Hub

Figure 10 - Example facility for collecting data from DSRC transmit coverage tests

4.3.4.1 Transmit Coverage Data Collection Configuration and Procedures

Figure 11 illustrates two options to collect transmit coverage data. Option 1 uses direct RP measurements (4.3.4.1.1). Option 2 uses measurements in three parts: antenna gain (4.3.4.1.2.1), cable loss (4.3.4.1.2.2), and conducted output power (4.3.4.2). Regardless of which option is used, the RF data will be collected in the Left and Right sectors around the vehicle (Figure 12, left graphic) at multiple elevations above and below the horizon (Figure 12, right graphic), which supports data verification according to the requirements in SAE J2945/1.

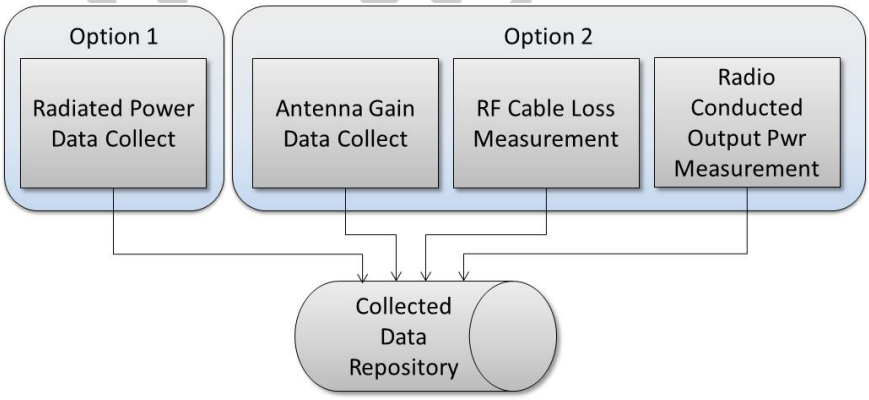

Figure 11 - Transmit coverage data collection options

© SAE International

Documents
Document Sharing Hub

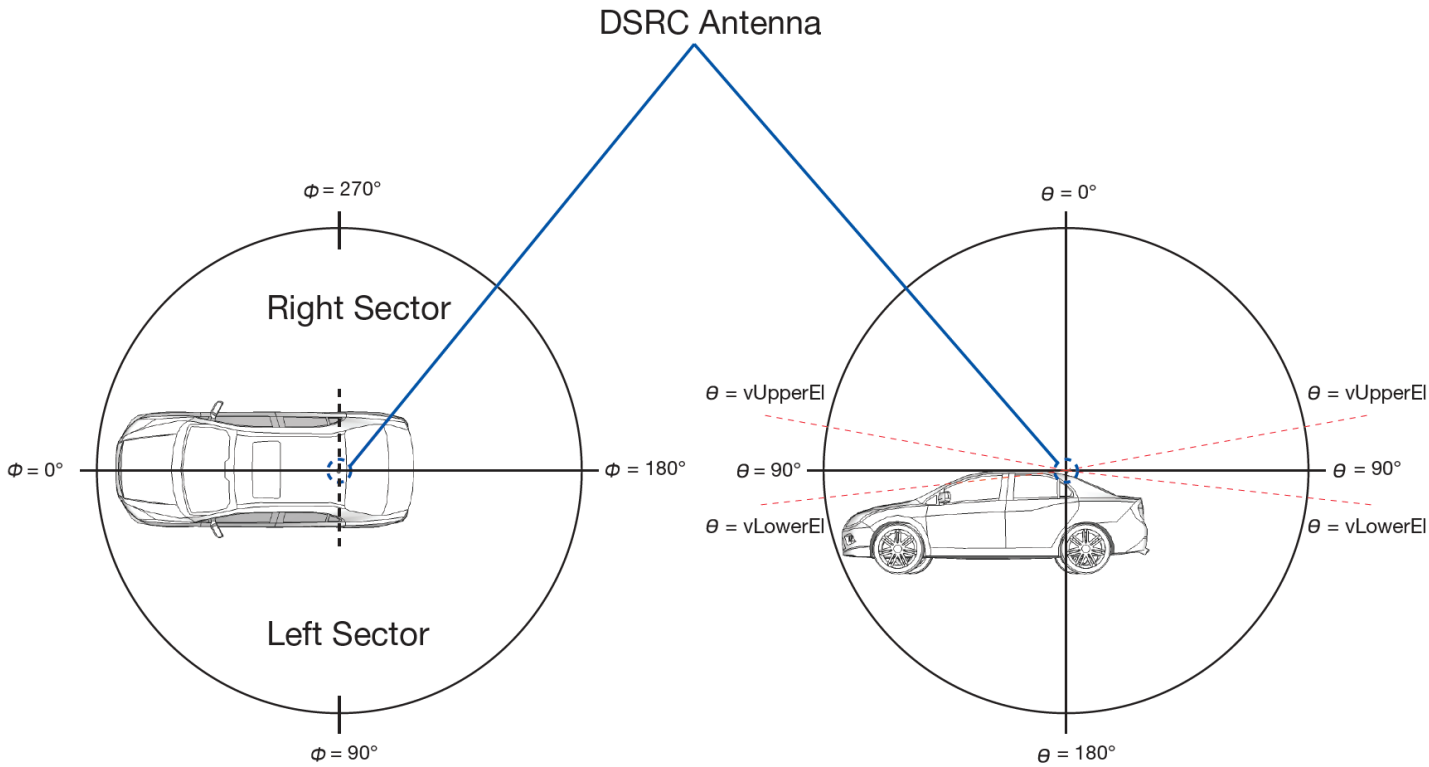

Figure 12 - RF data collection in the left and right sectors (left graphic) and at multiple elevation angles (right graphic)

The following variable names listed in Table 18 are referred to in the transmit coverage data collection procedures.

Table 18 - Transmit coverage data collection variables

Variables Used in Transmit Coverage Data Collection (refer to SAE J2945/1)	
SectorRPAvg	The linear average of all of the RP measurements over one sector, in dBm.
MinSectorRP	The lesser of the right and left SectorRPAvg values, in dBm.
CLoss	The total cable and connector losses, in dB.
SectorAntGainAvg	The linear average of all of the gain measurements over one sector, in dBi.
MinSectorAntGain	The lesser of the right and left SectorAntGainAvg values, in dBi.
MaxTxPowerCap	The measured maximum conducted transmit power in dBm of the DSRC radio subsystem at which 802.11 transmitter requirements are met.
PwrRange	The range of conducted transmit power output, in dB. PwrRange = MinSectorAntGain + MaxTxPowerCap - CLoss - *vRPMax* + *vTxPwrRange*
RP (dBm)	RP = MinSectorRP (Option 1) RP = MinSectorAntGain + MaxTxPowerCap - CLoss (Option 2)

4.3.4.1.1 Option 1: Radiated Power Test Data Collection

If Option 1 is used, compliance with the RP requirements of SAE J2945/1 is verified with a vehicle-level test. In this case, the measured RP (RP = MinSectorRP, 4.3.4.1.1.1) must be at least the minimum required value (*vRP* per SAE J2945/1).

4.3.4.1.1.1 Measured Radiated Power Data Collection Procedure

Using an automotive test range, direct RP measurements can be made. Figure 13 shows such a range and a setup for acquiring RP data from a DSRC-equipped light vehicle. The setup uses a commercial RF power measurement device such as a spectrum analyzer, mechanical azimuth and elevation controllers and positioners, as well as a test computer with software that interfaces to and controls the equipment.

© SAE International
AVA Documents Document Sharing Hub
Full document details: SAE J2945_1A_202603

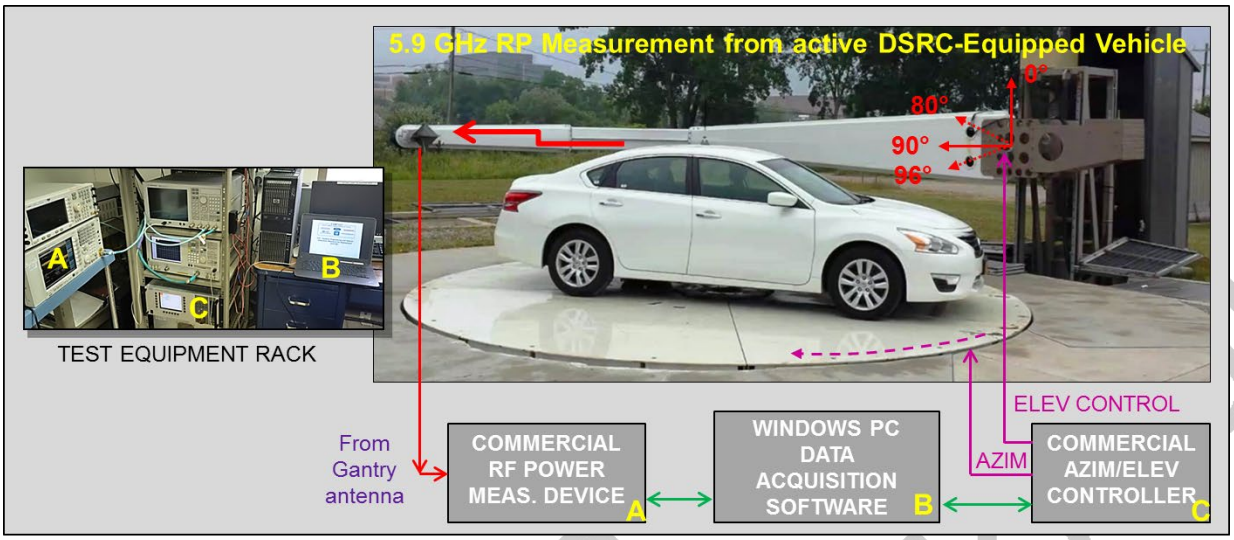

Figure 13 - Direct radiated power measurement system

The procedure requires an initial calibration using a reference antenna in the measurement system before collecting RP data from the vehicle. Figure 14 shows an example calibration setup. An RF signal source and the reference antenna generate a known reference RP level that is received by an instrumentation receive antenna and measured by the commercial RF power measurement device (shown in Figure 13). This level is used as a RP reference when power from the vehicle is measured.

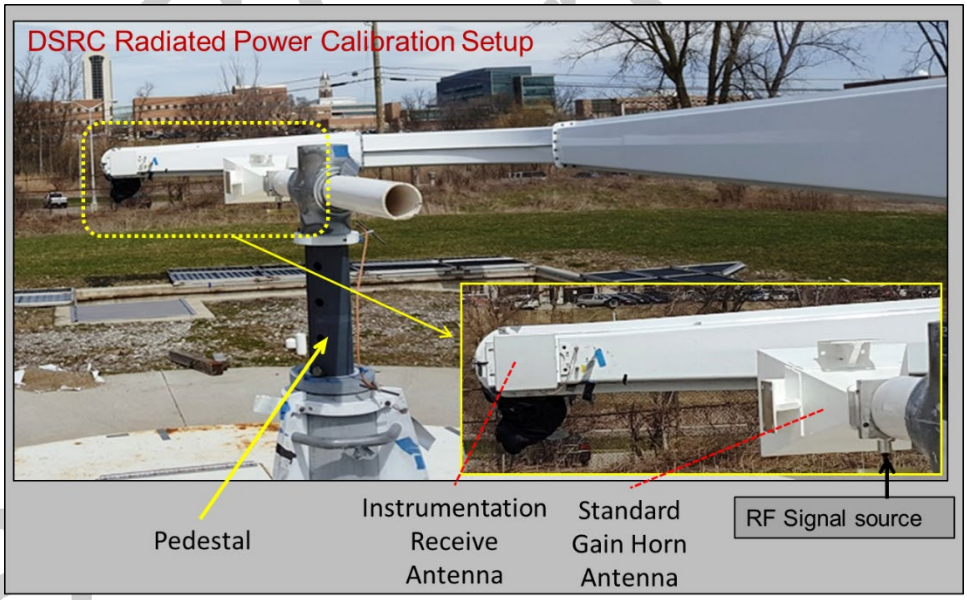

Figure 14 - DSRC radiated power calibration setup

Table 19 provides the procedure for the DSRC radiated power calibration and test data collection.

© SAE International

Documents
Document Sharing Hub

Table 19 - Procedure #12-1, DSRC radiated power data collection (DTC Option 1)

Procedure #12-1: DC-DTC Option 1	**Est. Time: 90 minutes**
Purpose	Measure and record the DSRC RP around the periphery of a DSRC-equipped light vehicle at the maximum conducted transmit power setting.
NOTE	The following procedure assumes measurements are made at a facility that includes RF power measurement equipment and the capability to measure around the periphery of the vehicle at angles above and slightly below the horizon. Appendix B provides the requirements for such a facility. (This procedure does not require the test tools described in Appendix A.)
NOTE	Direct access and special control over the IUT are required to run this test.
1. Setup	Configure the reference antenna and RF signal source on a pedestal in the center of the test area. Set the source antenna height on the gantry to match the reference antenna height (shown in Figure 14) and connect and power-up the RF signal source to the reference antenna. Inject a signal from the RF signal source at 5860 MHz into the reference antenna to generate a known reference RP level.
2. Run	Measure the power level of this reference RP with the commercial power measurement device and store the reference value (automated calibration software is acceptable). Clear the pedestal, reference antenna, and signal source from turntable.
3. Setup	Move the vehicle into the test area. Center the on-vehicle antenna in the test area or on the turntable and position the vehicle's forward direction for 0 degree azimuth as defined in the coordinate frame of the DSRC antenna coordinate system which is shown in Figure 15. A DSRC-equipped vehicle in a turntable-based system is shown in Figure 13.
4. Setup	Set the gantry height (source antenna) to match the mid-point of the on-vehicle antenna height. This will set the 90 degree elevation reference to the height of the on-vehicle antenna as required in the coordinate frame of the DSRC antenna coordinate system (Figure 15).
5. Run	With the car started and the DSRC system powered up, set the DSRC radio to transmit packets on channel 172, with a payload size of at least 350 bytes, transmitting at a rate up to 200 Hz (for good packet power capture), using the vehicle's maximum transmit power (MaxTxPowerCap), and with a 6 Mbps burst rate. Note that the vehicle's maximum conducted transmit power into the antenna is limited by Federal Communications Commission (FCC) rules (refer to 47 Code of Federal Regulations (CFR) parts 90 and 95).
6. Setup	Configure the measurement system software to acquire RP data at the nominal angular increments and ranges given below.[1] • Azimuth angle increment: 1 degree (2 degrees maximum). • Azimuth angle range: 360 degrees. • Elevation angle increment: 2 degrees (maximum). • Elevation angle range: 80 to 96 degrees (nine elevations).
7. Run	Using the power measurement system software, collect the RP data at nominal azimuth and elevation spacing, apply the calibration factor, and store the values. This completes the collection of RP data at the test range.[2]
8. Run	Filter the data to isolate the right and left sectors. To isolate the sectors shown in Figure 12, the test range in Figure 13 identifies the left sector as 0 to 180 degrees and right as 180 to 360 degrees. The coordinate conventions of various test ranges can be slightly different, as long as the right sector represents the passenger side of the vehicle and left sector the driver side. This filtering is performed on all measurement points, so that approximately 180 x 9 = 1620 data points are isolated for each sector (for example). Note that SAE J2945/1, section 6.4.1 "DSRC Radiated Power and Transmit Power Accuracy," defines how the 0 degree and 180 degrees border points are handled in the filtering of RP data that comprise the left and right sectors, except that the measured value is RP and not antenna gain.

[1] The angular increments specified in the SAE J2945/1 requirements are maximum increments. Smaller increments may be used.

[2] If the vehicle supports cyclic delay diversity, perform power measurements from each antenna individually, and linearly, add the power results from each antenna for each data point in a sector. The total number of aggregated RP data points must still be at least 810 minimum (for 2 degrees AZ, 2 degrees EL spacing) per sector and each data point would then be the linear addition of the RP results from all antennas at each data point. Then process the aggregated RP data set using Procedure #12-1, steps 8 through 11.

DRAFT © SAE International

AVA Documents Document Sharing Hub

Procedure #12-1: DC-DTC Option 1	Est. Time: 90 minutes
9. Run	For each sector, perform the following: • Convert the 1620 power points, in dBm, to linear values. That is, convert each dBm measurement, Pi, to pi = $10^{(Pi/10)}$. • Next, average the pi values (1620 power points) to obtain (piave). Convert (piave) to an average in dBm, using 10 x log (piave). This value is SectorRPAvg (each sector has its own SectorRPAvg value).
10. Run	Compare the values of SectorRPAvg from the left and right sector, and record the lesser of the two SectorRPAvg values as MinSectorRP.
11. Run	Verify the collected RP data for each sector is complete and save the collected data to the Collected Data Repository. Saved data can be used for potential future analysis.

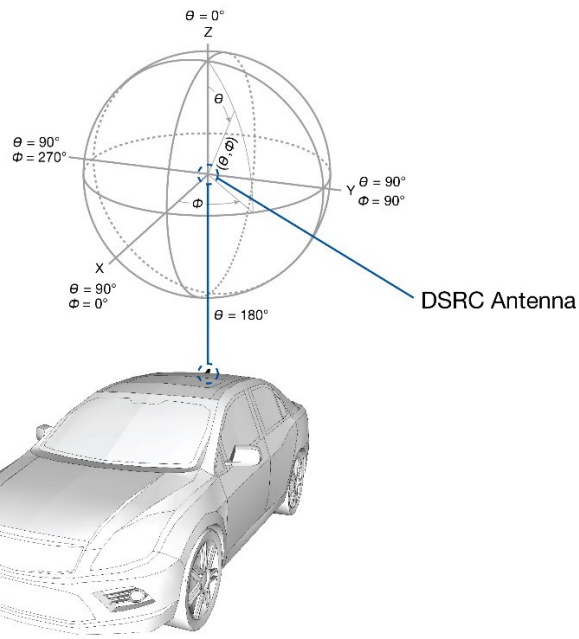

Figure 15 - DSRC antenna coordinate system reference

4.3.4.1.2 Option 2: Antenna Gain Test and CLoss Data Collection

Note that if Option 2 is used, compliance with the RP requirements of SAE J2945/1 requires that the antenna gain (MinSectorAntGain, 4.3.4.1.2.1), cable loss (CLoss, 4.3.4.1.2.2), and measured maximum output power (MaxTxPowerCap, 4.3.4.2) be measured and combined to verify that RP meets the minimum required value.

4.3.4.1.2.1 Antenna Gain Data Collection Procedure

Antenna test ranges are designed to perform automated gain measurements by transmitting a signal through the test range system from a source antenna to the antenna under test (AUT). Figure 16 shows such a range and a setup for acquiring antenna gain data on a light vehicle. This is the same physical plant as shown in Figure 10 but uses a commercial turnkey antenna gain measurement system that includes an RF network analyzer, similar mechanical azimuth and elevation controllers and positioners, and a test computer and antenna gain test software that interfaces to and controls the equipment.

Documents
Document Sharing Hub
Full document details: SAE J2945_1A_202603

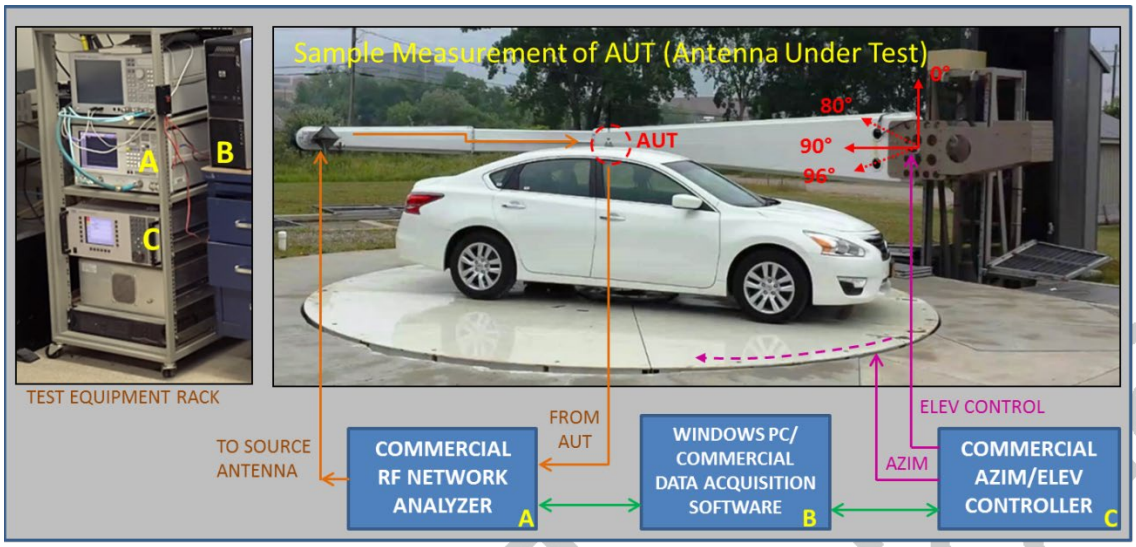

Figure 16 - Antenna gain measurement system

The procedure involves an initial calibration by using a reference antenna in the measurement system before collecting measurements on the AUT. Obtaining a gain reference before acquiring gain data on the AUT is a common practice for this type of gain measurement system. Figure 17 shows a view of the DSRC gain calibration setup, and Table 20 provides the procedure for the calibration and test data collection.

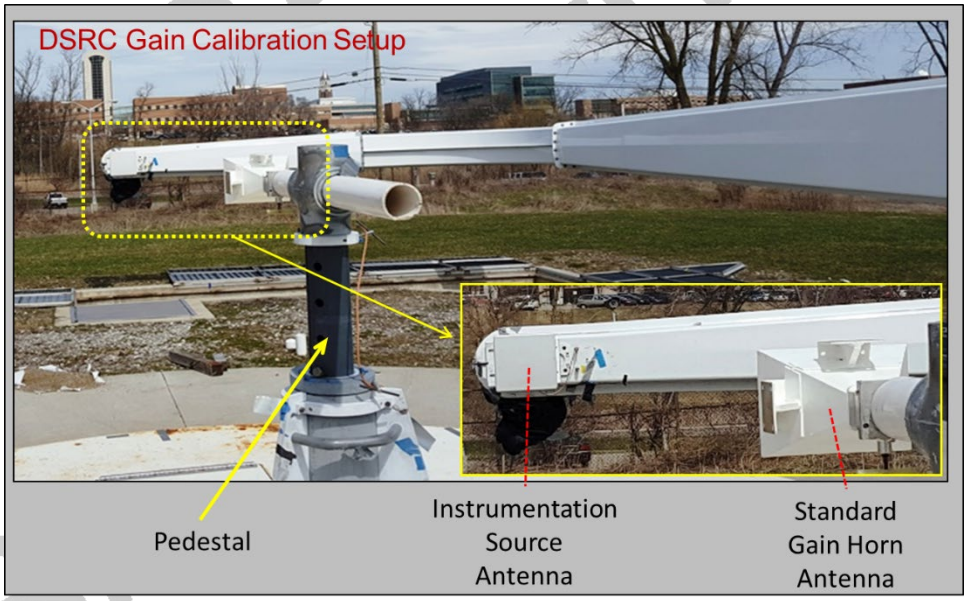

Figure 17 - DSRC gain calibration setup

© SAE International

Documents
Document Sharing Hub

Table 20 - Procedure #12-2a, antenna gain data collection (DTC Option 2)

Procedure #12-2a: DC-DTC Option 2	**Est. Time: 90 minutes**
Purpose	Measure and record the on-vehicle antenna gain data around the vehicle periphery using industry-standard antenna gain measurement procedures.
NOTE	The following procedure assumes measurements are made at a facility that includes RF antenna gain measurement equipment and the capability to take measurements around the periphery of the vehicle at angles above and slightly below the horizon. Appendix B provides the requirements for such a facility. (This procedure does not require the test tools described in Appendix A.)
1. Setup	Following standard calibration procedures for the antenna measurement system, configure the reference antenna on a pedestal in the center of the test area. Set the source antenna height on the gantry to match the reference antenna height and connect the measurement cable to the reference antenna. Configure software for a calibration measurement at 5860 MHz and to store the reference gain value.
2. Run	Obtain and store a gain reference (automated calibration software is acceptable). Clear the pedestal and reference antenna from turntable.
3. Setup	Move the vehicle into the test area. Center the on-vehicle antenna in the test area or on the turntable and position the vehicle's forward direction for 0 degree azimuth as defined in the coordinate frame of the DSRC antenna coordinate system which is shown in Figure 15.
4. Setup	Set the gantry height (source antenna) to match the mid-point of the on-vehicle antenna height. This will set the 90 degree elevation reference to the height of the on-vehicle antenna as required in the coordinate frame of the DSRC antenna coordinate system (Figure 15). Connect the measurement system cable to the on-vehicle antenna, including any of the vehicle's RF cabling desired to be included in the gain measurement.
5. Setup	Configure the antenna measurement system software to acquire antenna gain data at the same frequency used for measurement system calibration (5860 MHz), and at the angular increments and ranges given below.[3] • Azimuth angle increment: 1 degree (2 degrees maximum). • Azimuth angle range: 360 degrees. • Elevation angle increment: 2 degrees (maximum). • Elevation angle range: 80 to 96 degrees (nine elevations).
6. Run	Using the gain measurement system software, collect the raw data (magnitude and phase) for the AUT at the specified azimuth and elevation values. Convert the raw measurement data into calibrated gain data (based on the reference antenna) and store it. This completes the collection of antenna gain data at the antenna test range.[4]
7. Run	Filter the data to isolate the right and left sectors. To isolate the sectors shown in Figure 12, the test range in Figure 16 identifies the left sector as 0 to 180 degrees and right as 180 to 360 degrees. The coordinate conventions of various test ranges can be slightly different, as long as the right sector represents the passenger side of the vehicle and left sector the driver side. This filtering is performed on all measurement points, so that 180 x 9 = 1620 data points are isolated for each sector (for example). Note that SAE J2945/1, section 6.4.1 "DSRC Radiated Power and Transmit Power Accuracy," defines how the 0 degree and 180 degree border points are handled in the filtering of antenna gain data that comprise the left and right sectors.

[3] The angular increments specified in the SAE J2945/1 requirements are maximum increments. Smaller increments may be used.

[4] If the vehicle supports cyclic delay diversity, test each antenna individually, for the same specified azimuth and elevation values. Then combine the measured gain values for each antenna with cable loss and max output power to form a RP file for that antenna, as described in 4.3.4.1.2, and linearly add the RP data sets by adding all data values with a common azimuth and elevation value. The total aggregated set of RP data points must still be at least 810 minimum (for 2 degrees AZ, 2 degrees EL spacing) per sector. Then, process the aggregated RP data set using Procedure #12-2a, steps 8 through 11.

© SAE International DRAFT

AVA Documents Document Sharing Hub

Procedure #12-2a: DC-DTC Option 2	Est. Time: 90 minutes
8. Run	For each sector, perform the following: • Convert the 1620 data points, in dBi, to a linear value. That is, convert each dBi measurement, Gi, to gi = $10^{(Gi/10)}$. • Next, average the gi values (1620 data points) to obtain (giave). • Convert (giave) to an average in dBi, using 10 x $\log_{10}$(giave). This value is SectorAntGainAvg (each sector has its own SectorAntGainAvg value).
9. Run	Compare the values of SectorAntGainAvg from the left and right sector, and record the lesser of the two SectorAntGainAvg values as MinSectorAntGain.
10. Run	Verify the collected gain data for each sector is complete and save the collected data to the Collected Data Repository. Saved data can be used for potential future analysis.

4.3.4.1.2.2 CLoss Data Collection Procedure

The CLoss test is used if part or all of the RF cables between the DSRC radio (within the IUT) and its antenna are not already included in the antenna gain measurement. If all of the RF cabling was accounted for in the antenna gain test, there is no need to measure CLoss individually. The test configuration shown in Figure 18 and the procedure listed in Table 21 represent an approach for measuring CLoss using a signal generator and a power meter, but a network analyzer can also be used to perform the measurement.

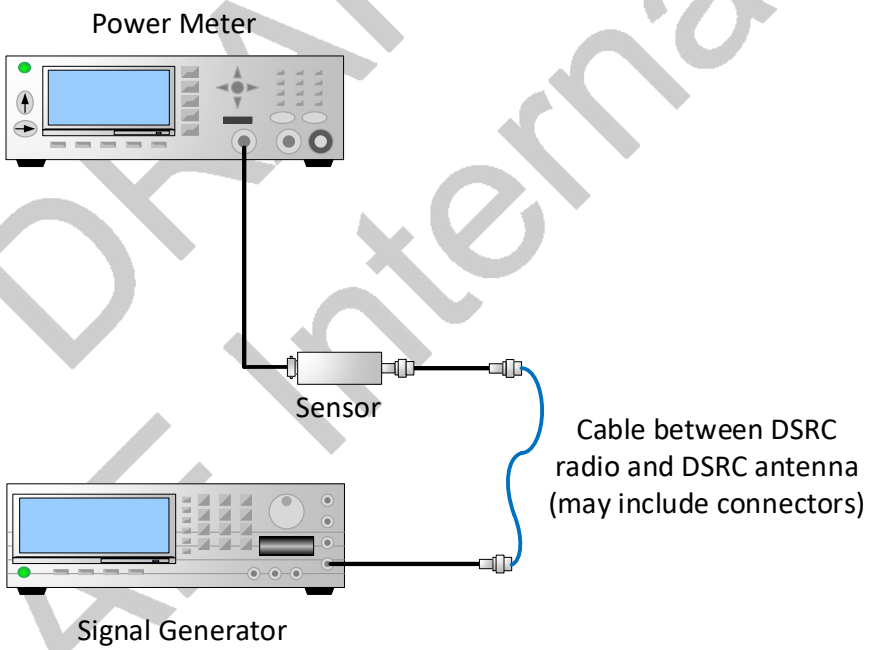

Figure 18 - CLoss test configuration (note that some power meters have an internal sensor)

© SAE International DRAFT

Documents Document Sharing Hub