SURFACE VEHICLE STANDARD

J514™/1	NOV2022

Issued 2021-12
Revised 2022-11

Superseding J514/1 DEC2021

Metallic Connections for Fluid Power and General Use - Part 1: 37 Degree Flared Fittings

RATIONALE

Correct errors on Figures 8 and 10. Add column d_{29} dimension to Table 11. Correct S hex in Table 11 for sizes over -12. Also includes minor vocabulary corrections throughout the document.

FOREWORD

The January 2012 edition of SAE J514 was a single document specifying the requirements for the following:

- 37 degree flare adapters with SAE J1926-3 stud ends and NPTF pipe ends.
- Flareless bite type adapters with SAE J1926-3 stud ends and NPTF pipe ends.
- O-ring plugs with internal and external hex.
- NPTF pipe adapters
- 30 degree NPSM adapter unions.

ISO 8434-2 was published covering the requirements for 37 degree flare adapters with ISO 6149-3, ISO 1179-3, ISO 11926-3, and ISO 9974-3 stud ends. This revision of SAE J514 adopts the connectors covered within ISO 8434-2, incorporating the rationalized dimensions from ISO 8434-2 where applicable, for the inch (ISO 11926-3/SAE J1926-3) stud end 37 degree connectors, as well as fitting configurations that are not specified in the ISO standard. Formerly, SAE J514 was organized as a single document with ten clauses, which included six sections. This revision of SAE J514 has been organized into three sections as follows:

Part 1: 37 Degree Flared Fittings

Part 2: Flareless (Bite Type) Fittings

Part 3: NPTF Pipe Fittings and Pipe Unions

Grandfather clause: Fittings must conform to this revision of SAE J514 by April 1, 2025.

It is important to note that this and all SAE J-documents are intended for ground vehicle use only and not intended for aerospace applications.

Modification of -2 through -16 sizes in these types of fittings for use with MS 33649 are no longer specified in this standard.

SAE Executive Standards Committee Rules provide that: “This report is published by SAE to advance the state of technical and engineering sciences. The use of this report is entirely voluntary, and its applicability and suitability for any particular use, including any patent infringement arising therefrom, is the sole responsibility of the user.”

SAE reviews each technical report at least every five years at which time it may be revised, reaffirmed, stabilized, or cancelled. SAE invites your written comments and suggestions.

Copyright © 2022 SAE International

All rights reserved. No part of this publication may be reproduced, stored in a retrieval system or transmitted, in any form or by any means, electronic, mechanical, photocopying, recording, or otherwise, without the prior written permission of SAE.

TO PLACE A DOCUMENT ORDER: Tel: 877-606-7323 (inside USA and Canada)
Tel: +1 724-776-4970 (outside USA)
Fax: 724-776-0790
Email: CustomerService@sae.org

SAE WEB ADDRESS: http://www.sae.org

For more information on this standard, visit
https://www.sae.org/standards/content/J514/1_202211/

Documents
Document Sharing Hub

Full document details: SAE J514_1_202211

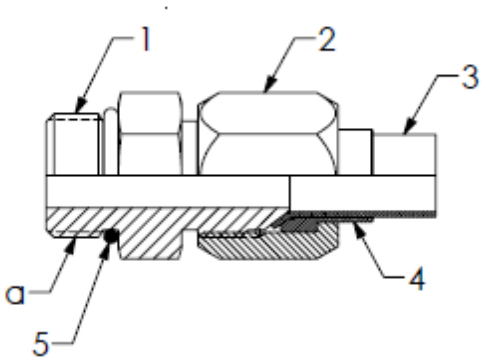

KEY:			
1	Straight stud connector body	4	Sleeve
2	Tube nut	5	O-ring (SAE J515)
3	Tube	a	Stud end in accordance with SAE J1926-3

Figure 1 - Cross section of typical 37 degree flared connection

Documents
Document Sharing Hub
Full document details: SAE J514_1_202211

TABLE OF CONTENTS

1. SCOPE 5

2. REFERENCES 5
2.1 Applicable Documents 5
2.1.1 SAE Publications 5
2.1.2 ANSI Accredited Publications 5
2.2 ASME Publications 6
2.3 ASTM Publications 6
2.4 ISO Publications 6

3. DEFINITIONS 7

4. REQUIREMENTS - GENERAL SPECIFICATIONS 8
4.1 Size Designations 8
4.2 Dimensions and Tolerances 8
4.3 Passages 10
4.4 Wall Thickness 10
4.5 Contour 10
4.6 Screw Threads 10
4.7 Material 10
4.8 Corrosion Protection 11
4.9 Workmanship 11

5. PERFORMANCE REQUIREMENTS 11
5.1 Working, Proof, and Burst Pressure 13
5.2 Proof Test 13
5.3 Burst Test 13
5.4 Cyclic Endurance (Impulse) Test 13
5.5 Hose Fitting/Tube Components Interface 13
5.6 O-Ring 13
5.7 Overtorque test 13
5.8 Repeated Assembly 14
5.9 Test Data Form 14

6. PACKAGING AND MARKING 14
6.1 Marking 14
6.2 Protection 14
6.3 SAE J846 Ordering Designation, Part Identification Number (PIN) 14
6.3.1 Connector Designation Code 14
6.3.2 Style and Material Modifiers 15
6.3.3 Size Designation 15

7. NOTES 16
7.1 Assembly Information 16
7.2 Identification Statement and Procurement Information 16
7.3 Revision Indicator 46

APPENDIX A TABLES FOR CALCULATING DIMENSIONS ON SPECIAL SIZES 47

APPENDIX B 37 DEGREE FLARED PIPE FITTINGS 55

Figure 1 Cross section of typical 37 degree flared connection 2
Figure 2 Run and branch illustration 7
Figure 3 Hex details 8
Figure 4 Connector style designations 14
Figure 5 Connector style designation with material modifier 15
Figure 6 Connector style, material, and size designation 15

AVA Documents Document Sharing Hub

Full document details: SAE J514_1_202211

Figure 7A Three piece tube assembly 16
Figure 7B Two piece tube assembly 17
Figure 7 Details of 37 degree flared hydraulic tube fitting assemblies (Figure 1) 17
Figure 8 37 degree flared connection 18
Figure 9 Sleeves (070115) 19
Figure 10 Short tube nut (070110, 07M0110) 20
Figure 11 Long tube nut (070111, 07M0111) 22
Figure 12 Cap nut (070112, 07M0112) 23
Figure 13 Cap assembly (moveable insert) (070112A) 25
Figure 14 Plug (070109, 07M0109) 26
Figure 15 Reducing adapter (070123)(1)(2) 27
Figure 16 Straight thread connector short (070120, 07M0120) 28
Figure 17 Large hex union (070119, 07M0119) 28
Figure 18 Straight thread connector (071720, 07M1720) 29
Figure 19 90 degree straight thread elbow (070220, 07M0220) 30
Figure 20 45 degree straight thread elbow (070320, 07M0320) 31
Figure 21 Straight thread run tee (070428, 07M0428) 31
Figure 22 Straight thread branch tee (070429, 07M0429) 32
Figure 23 90 degree straight thread elbow, long (071520, 07M1520) 32
Figure 24 90 degree straight thread elbow, extra long (071620, 07M1620) 33
Figure 25 90 degree straight thread elbow, extra extra long (072120, 07M2120) 34
Figure 26 Bulkhead lock nut (070118, 07M0118) 35
Figure 27 Bulkhead union (070601, 07M0601), optional construction 36
Figure 28 90 degree bulkhead elbow (070701, 07M0701) 36
Figure 29 45 degree bulkhead elbow (070801, 07M0801) 37
Figure 30 Bulkhead branch tee (070958, 07M0958) 37
Figure 31 Bulkhead run tee (070959, 07M0959) 38
Figure 32 Union (070101, 07M0101) 40
Figure 33 90 degree union elbow (070201, 07M0201) 40
Figure 34 Union tee (070401, 07M0401) 41
Figure 35 Union cross (070501, 07M0501) 41
Figure 36 90 degree swivel elbow (070221, 07M0221) 43
Figure 37 45 degree swivel elbow (070321, 07M0321) 43
Figure 38 Swivel run tee (070432 07M0432) 44
Figure 39 Swivel branch tee (070433, 07M0433) 44

Table 1A Hex tolerances 9
Table 1B Hole tolerances 9
Table 2 Linear tolerances (except for broken edges) 9
Table 3 Broken edges tolerances (external radii and chamfer heights) 9
Table 4 Angular tolerances 9
Table 5 Qualification test torque(1)(2) requirements 12
Table 6 Working pressure ratings(1) 12
Table 7 Ordering code examples 16
Table 8 Dimensions of 37 degree flared hydraulic tube fitting assemblies (Figures 7A and 7B) 17
Table 9 Dimensions of 37 degree flared connections (Figure 8) 18
Table 10 Dimensions of sleeves for metric and inch tubing (1) (Figure 9) 19
Table 11 Dimensions of short tube nuts (Figure 10) 21
Table 12 Dimensions of long tube nuts (Figure 11) 22
Table 13 Dimensions of cap nuts (Figure 12) 24
Table 14 Dimensions of cap assembly (1) (Figure 13) 25
Table 15 Dimensions of plug (Figure 14) 26
Table 16 Dimensions(1) of reducing adapter (Figure 15) 27
Table 17 Dimensions of Figures 16 through 18(2) 29
Table 18 Dimensions of Figures 19 through 25(1) 34
Table 19 Dimensions of Figures 26 through 31 38
Table 20 Dimensions of Figures 32 through 35 42
Table 21 Dimensions of Figures 36 through 39 45

AVA Documents
Document Sharing Hub

Full document details: SAE J514_1_202211

1. SCOPE

This part of SAE J514 covers general and dimensional specifications for 37 degree flared tube fittings. Also included are 37 degree flared fittings with NPTF pipe threads in Appendix B. These fittings are intended for general application in hydraulic systems on industrial equipment and commercial products.

These fittings are capable of providing leak-proof, full flow connections in hydraulic systems operating at working pressures as specified in Table 6. Since many factors influence the pressure at which a hydraulic system will or will not perform satisfactorily, the values shown in Table 6 should not be construed as a guaranteed minimum.

For any application, it is recommended that sufficient testing be conducted and reviewed by both the user and fitting manufacturer to assure that performance levels will be safe and satisfactory.

2. REFERENCES

2.1 Applicable Documents

The following publications form a part of this specification to the extent specified herein. Unless otherwise indicated, the latest issue of SAE publications shall apply.

2.1.1 SAE Publications

Available from SAE International, 400 Commonwealth Drive, Warrendale, PA 15096-0001, Tel: 877-606-7323 (inside USA and Canada) or +1 724-776-4970 (outside USA), www.sae.org.

SAE J356 Welded, Flash-Controlled, Low-Carbon Steel Tubing Normalized for Bending, Double Flaring, Beading, Forming, and Brazing

SAE J403 Chemical Compositions of SAE Carbon Steels

SAE J405 Chemical Compositions of SAE Wrought Stainless Steels

SAE J515 Specification for O-Ring Materials Used with Hydraulic Connectors

SAE J524 Seamless Low-Carbon Steel Tubing Annealed for Bending and Flaring

SAE J525 Welded and Cold Drawn Low-Carbon Steel Tubing Annealed for Bending and Flaring

SAE J533 Flares for Tubing

SAE J846 Coding Systems for Identification of Fluid Conductors and Connectors

SAE J1065 Nominal Reference Working Pressures for Steel Hydraulic Tubing

SAE J1926-3 Connections for General Use and Fluid Power - Ports and Stud Ends with ASME B1.1 Threads and O-Ring Sealing - Part 3: Light-Duty (L-Series) Stud Ends

SAE J2593 Information Report for the Installation of Fluid Conductors and Connectors

2.1.2 ANSI Accredited Publications

Copies of these documents are available online at https://webstore.ansi.org/.

ANSI B4.2 Preferred Metric Limits and Fits

Documents
Document Sharing Hub

Full document details: SAE J514_1_202211

2.2 ASME Publications

Available from ASME, P.O. Box 2900, 22 Law Drive, Fairfield, NJ 07007-2900, Tel: 800-843-2763 (U.S./Canada), 001-800-843-2763 (Mexico), 973-882-1170 (outside North America), www.asme.org.

ASME B1.1 Unified Inch Screw Threads

ASME B46.1 Surface Texture (Surface Roughness, Waviness and Lay)

2.3 ASTM Publications

Available from ASTM International, 100 Barr Harbor Drive, P.O. Box C700, West Conshohocken, PA 19428-2959, Tel: 610-832-9585, www.astm.org.

ASTM A380 Standard Practice for Cleaning, Descaling, and Passivation of Stainless Steel Parts, Equipment and Systems

ASTM B117 Method of Salt Spray (Fog) Test

ASTM B633 Standard Specifications for Electrodeposited Coatings of Zinc on Iron and Steel

2.4 ISO Publications

Copies of these documents are available online at https://webstore.ansi.org/.

ISO 48 Vulcanized Rubbers - Determination of Hardness (Hardness Between 30 and 85 IRHD)

ISO 68-2 ISO General Purpose Screw Threads - Basic Profile - Part 2: Inch Screw Thread

ISO 263 ISO Inch Screw Threads - General Plan and Selection for Screws, Bolts and Nuts - Diameter Range 0.06 to 6 Inch

ISO 725 ISO Inch Screw Threads - Basic Dimensions

ISO 2768-1 General Tolerances - Part 1: Tolerances for Linear and Angular Dimensions without Individual Tolerances Indications

ISO 3448 Industrial Liquid Lubricants - ISO Viscosity Classification

ISO 5598 Fluid Power Systems and Components - Vocabulary

ISO 5864 ISO Inch Screw Threads - Allowances and Tolerances

ISO 6508 Metallic Materials - Hardness Test - Rockwell Test (Scales A - B - C - D - E - F - G - H - K)

ISO 8434-2 Metallic Tube Connections for Fluid Power and General Use - Part 2: 37 Degree Flared Connectors

ISO 9227 Corrosion Tests in Artificial Atmospheres - Salt Spray Tests

ISO 11926-3 Connections for General Use and Fluid Power - Ports and Stud Ends with ISO 725 Threads and O-Ring Sealing - Part 3: Light Duty (L) Series Stud Ends

ISO 19879 Metallic Tube Connections for Fluid Power and General Use - Test Methods for Hydraulic Fluid Power Connections

Documents
Document Sharing Hub

Full document details: SAE J514_1_202211

3. DEFINITIONS

For this part of SAE J514, the definitions given in ISO 5598 and the following definitions shall apply:

3.1 FLUID POWER

(From ISO 5598) Means by which energy is transmitted, controlled, and distributed using a pressurized fluid as the medium.

3.2 CONNECTOR

(From ISO 5598) Leak-proof device to connect pipelines (conductors) to one another, or to equipment.

3.3 FASTENING THREAD

Terminal thread of a complete connector.

3.4 RUN

Two axially aligned outlets of a tee or cross. See Figure 2.

Figure 2 - Run and branch illustration

3.5 BRANCH

Side outlet of a tee or cross.

3.6 CHAMFER/COUNTERSINK

Removal of a conical portion at the entrance (female) or end (male) of a thread to assist assembly and prevent damage to the start of the thread.

3.7 TORQUES

3.7.1 ASSEMBLY TORQUE

The recommended torque value to be applied in order to achieve a satisfactory final assembly.

3.7.2 QUALIFICATION TEST TORQUE

The torque used to verify conformance of the connector to the requirements of this standard.

3.7.3 OVERTORQUE

The torque the nut shall withstand without deformation that renders it unusable.

3.8 WORKING PRESSURE

(From ISO 5598) Pressure at which the apparatus is being operated in a given application, as shown in Table 6.

3.9 ADJUSTABLE STUD END

A stud end connector that allows for connector orientation before final tightening of the locknut to complete the connection. This type of stud end is typically used on shaped connectors (e.g., tees, crosses, and elbows).

Documents
Document Sharing Hub
Full document details: SAE J514_1_202211

3.10 NONADJUSTABLE STUD END

A stud end connector that does not require specific orientation before final tightening of the connection because it is normally used on straight connectors.

3.11 PREFERRED DESIGN

Connectors shown in the main body of this document.

3.12 JUMP SIZE CONNECTOR

Connectors with dis-similar size end connections, for example, -6 male flare with a -12 stud end.

3.13 SIZE DESIGNATION

Connector sizes are designated by the nominal outside diameter of the tubing or nominal inside diameter of hose. Refer to SAE J846 for specific size details.

3.14 CONTACT SURFACES

All mating interfaces within a connection including, but not limited to, threads, flare seat, and shoulders of nut and sleeve.

4. REQUIREMENTS - GENERAL SPECIFICATIONS

The following general specifications supplement the dimensional data contained in Tables 8 to 21 with respect to all unspecified detail.

4.1 Size Designations

Fitting sizes are designated by the corresponding outside diameter of the tubing for the various types of tube and stud ends.

Refer to SAE J846 for proper coding and call-out

4.2 Dimensions and Tolerances

Except for nominal sizes and thread designations, dimensions and tolerances are given in SI units. Tabulated dimensions shall apply to the finished parts, plated or otherwise processed, as specified by the user. Hex tolerances across flats are listed in Table 1A. For machined from bar stock and cold formed surfaces, hexagonal tolerances across flats shall be in accordance with ISO 4579-1, product grade C. The minimum across corner hex dimensions shall be 1.092 times the nominal width across flats, and the minimum side flat shall be 0.43 times the nominal width across flats, but shall not result in a side flat width less than 0.75 times the nominal width across flats as shown in Figure 3. The minimum across-corners dimensions of external squares shall be 1.25 times the nominal width across flats, but shall not result in a side-flat width less than 0.75 times the nominal width across the flats.

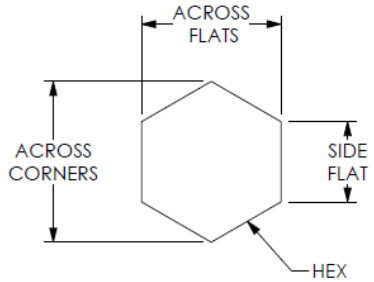

Figure 3 - Hex details

Documents
Document Sharing Hub
Full document details: SAE J514_1_202211

Table 1A - Hex tolerances

Nominal Hex Size Across Flats mm Over	Nominal Hex Size Across Flats mm Include	Nominal Hex Size Across Flats Inches Over	Nominal Hex Size Across Flats Inches Include	Tolerance (Minus Only) mm	Tolerance (Minus Only) Inches
-	19.05	-	0.750	0.3	0.012
19.05	25.40	0.750	1.000	0.4	0.016
25.40	34.92	1.000	1.375	0.5	0.020
34.92	and up	1.375	and up	0.8	0.031

Tolerance on all dimensions not otherwise limited shall be ±0.4 mm. Fitting seats shall be concentric with straight thread pitch diameters within 0.25 mm full indicator movement (FIM).

Unless otherwise specified, tolerances on hole diameters in the dimensional tables shall be as tabulated in Table 1B:

Table 1B - Hole tolerances

Hole Size Range mm	Tolerance mm
≤6	±0.1
>6 and ≤30	±0.2
>30	±0.3

Other tolerances not specified shall be in accordance with ISO 2768-1 as shown in Tables 2 to 4 for designation m (medium).

Table 2 - Linear tolerances (except for broken edges)

>0.5 ≤6	>6 ≤30	>30 ≤120	>120 ≤400	>400 ≤1000	>1000 ≤2000	>2000 ≤4000
±0.1	±0.2	±0.3	±0.5	±0.8	±1.2	±2

NOTE:
For nominal sizes below 0.5, the tolerances shall be indicated adjacent to the relevant nominal sizes.

Table 3 - Broken edges tolerances (external radii and chamfer heights)

≥0.5 ≤3	>3 ≤6	>6
±0.2	±0.5	±1

NOTE:
For nominal sizes below 0.5, the tolerances shall be indicated adjacent to the relevant nominal sizes.

Table 4 - Angular tolerances

≤10	>10 ≤50	>50 ≤120	>120 ≤400	>400
±1 degree	±0 degree 30 minutes	±0 degree 20 minutes	±0 degree 10 minutes	±0 degree 5 minutes

NOTE:
Tolerances for ranges of lengths, in millimeters, of the shorter side of the angle concerned.

Documents
Document Sharing Hub

Angular tolerance on axis of ends on elbows, tees, and crosses shall be ±2.50 degrees for -2 to -6 tube fittings and ±1.50 degrees for -8 to -32 OD tube fittings.

Where so illustrated and not otherwise specified, hexagon corners shall be chamfered 15 to 30 degrees to a diameter equal to the width across flats, with a minus tolerance of 0.4 mm; or, where design permits, corners may be chamfered to the diameter of the abutting surface providing the length of chamfer does not exceed that produced by the 30 degree chamfer previously described.

Alternatively, on connections other than SAE J1926-3 straight thread, a 5 degree chamfer starting at the undercut diameter behind the threads or outside diameter of the threads shall be allowed, providing the hex width at corners is not reduced below that produced by the 30 degree chamfer previously described.

4.3 Passages

Where passages in straight fittings are machined from opposite ends, the offset at the meeting point shall not exceed 0.4 mm. The cross-sectional area at the junction of passages in angle fittings shall not be less than that of the smallest passage.

4.4 Wall Thickness

Unless otherwise designated, the wall thickness at any point on fittings shall not be less than the thickness established by the specified dimensions, tolerances, and eccentricities for inner and outer surfaces.

4.5 Contour

Details of contour (e.g., bodyshape, construction type, etc.) shall be optional with the manufacturer, provided the dimensions and tolerances in this document are maintained.

4.6 Screw Threads

The screw threads on the tube/hose connection ends of the connectors shall be inch screw threads per ASME B1.1 (ISO 725). Straight threads shall be class 2A or 2B, except external threads which are plated or coated may exceed 2A diameters but shall not exceed maximum of 3A diameters. Internal threads of all classes shall be within specified limits after plating or coating.

Tables 11 through 13 specify minor diameters for 37 degree tube and cap nuts, which have been modified.

When external threads are produced by thread rolling and the body is not undercut, the unthreaded area adjacent to the shoulder may be reduced to the minimum pitch diameter.

External threads shall be chamfered and internal threads shall be countersunk as specified.

4.7 Material

Unless otherwise specified, fittings shall be made from carbon steel.

Stainless steel fittings shall be made from AISI Type 300 Series stainless steel in accordance with SAE J405. Unless otherwise specified by the purchaser, stainless steel fittings shall be passivated per ASTM A380. Carbon steel and stainless steel fittings fabricated from multiple components must be bonded together with materials having a melting point of not less than 996 °C (1825 °F).

37 degree flared type brass fittings shall be made from C36000 (CA360) one-half hard barstock or extruded shapes or C37700 (CA377) forgings or equivalent materials.

Documents
Document Sharing Hub

Full document details: SAE J514_1_202211

4.8 Corrosion Protection

The external surfaces and threads of all carbon steel parts shall be plated or coated with a suitable material that passes a salt spray test in accordance with ISO 9227 ASTM B117. The following requirements shall apply:

- No appearance of corrosion products of the protective coating before 96 hours.
- No appearance of corrosion products of the base metal before 144 hours.

The following exceptions shall apply

a. All internal fluid passages.

b. Edges such as hex points, serrations, and crests of threads where there may be mechanical deformation of the plating or coating typical of mass-produced parts or shipping effects.

c. Areas where there is mechanical deformation of the plating or coating caused by crimping, flaring bending, and other post-plate metal forming operations.

d. Areas where the parts are suspended or affixed in the test chamber where condensate can accumulate.

Parts manufactured to this specification shall not be cadmium plated and shall not use hexavalent chromate coatings. Internal fluid passages shall be protected from corrosion during storage and shipping. Changes in plating or coating shall be re-qualified to ensure assembly torque is not affected.

4.9 Workmanship

Workmanship shall conform to the best commercial practice to produce high-quality connectors. Connectors shall be free from all hanging burrs, loose scale, and slivers which might become dislodged in usage and all other defects which might affect their serviceability. All sealing surfaces must be smooth except that annular tool marks up to 2.5 µm max Ra shall be permissible. The O-ring washer must be clinched to the fitting as specified in SAE J1926-3

5. PERFORMANCE REQUIREMENTS

The following outlines the performance test requirements for standard 37 degree flared fittings. Connectors, swivel nuts, and sleeves shall be tested in accordance with ISO 19879, unless otherwise specified. In addition to the test requirements and procedures specified, all components must be able to pass the performance requirements in the as-shipped condition (e.g., annealed components, plating, coatings, rust preventative, etc.).

Documents
Document Sharing Hub

Full document details: SAE J514_1_202211

Table 5 - Qualification test torque[(1)(2)] requirements

Nom SAE Dash Size	Nom Tube OD Metric	Inch Nom Tube OD mm	Inch Nom Tube OD Inches	Tube End and SAE O-Ring Port Thread Size	37 Degree Flare End Swivel Nut Torque Nm	37 Degree Flare End Swivel Nut Over Torque Nm
2	4	3.18	1/8	5/16-24	8- 9	15
3	5	4.76	3/16	3/8-24	11- 12	19
4	6	6.35	1/4	7/16-20	15- 16	24
5	8	7.94	5/16	1/2-20	19- 21	31
6	10	9.52	3/8	9/16-18	24- 28	42
8	12	12.70	1/2	3/4-16	49- 53	80
10	16	15.88	5/8	7/8-14	77- 85	114
12	20	19.05	3/4	1-1/16-12	107-119	160
14	22	22.22	7/8	1-3/16-12	127-140	186
16	25	25.40	1	1-5/16-12	147-154	214
20	30	31.75	1-1/4	1-5/8-12	172-181	271
24	38	38.10	1-1/2	1-7/8-12	215-226	339
32	50	50.80	2	2-1/2-12	332-350	497

(1) Test torques given here are for low carbon steel fittings only. Consult the manufacturer for values for other materials.
(2) For stud end test torques, refer to SAE J1926-3.

Table 6 - Working pressure ratings[(1)]

Nom SAE Dash Size	Nom Tube OD Metric	Inch Nom Tube OD mm	Inch Nom Tube OD Inches	Straight Thread Size	Non-Adjustable[(2)(4)(5)(6)] Stud Ends Unions and Bulkheads MPa	Adjustable[(3)(4)(5)(6)] Stud Ends and Female Swivels MPa
2	4	3.18	1/8	5/16-24	34.5	34.5
3	5	4.76	3/16	3/8 -24	34.5	34.5
4	6	6.35	1/4	7/16-20	34.5	31
5	8	7.94	5/16	1/2 -20	34.5	27.5
6	10	9.52	3/8	9/16-18	34.5	27.5
8	12	12.70	1/2	3/4 -16	31	27.5
10	16	15.88	5/8	7/8 -14	24	21
12	20	19.05	3/4	1-1/16-12	24	21
14	22	22.22	7/8	1-3/16-12	21	17
16	25	25.40	1	1-5/16-12	21	17
20	30	31.75	1-1/4	1-5/8 -12	17	14
24	38	38.10	1-1/2	1-7/8 -12	14	10.5
32	50	50.80	2	2-1/2 -12	10.5	8

(1) Based on a 4:1 design factor.
(2) Applies to 37 degree tube ends and SAE J1926-3 nonadjustable stud ends.
(3) Applies to 37 degree female swivels and SAE J1926-3 adjustable stud ends.
(4) Proof pressure = 2 x Working pressure.
(5) Burst pressure = 4 x Working pressure.
(6) Impulse = 133% working pressure.
1 bar = 10^5 N/m^2 = 10^5 Pa = 0.1 MPa = 14.5 psi.

Refer to ISO 19879 for minimum number of samples required for testing.

Documents
Document Sharing Hub

5.1 Working, Proof, and Burst Pressure

Working pressures for fittings, tube connections, cap nuts, and hose fittings shall be as listed in Table 6 or as specified in its respective section. Proof pressures shall be twice the working pressures and minimum burst pressures shall be four times the working pressures.

5.2 Proof Test

All fittings for tubing and adapters shall be capable of withstanding proof pressure per Table 6 for a period of 1 minute without failure or leakage. Lubrication and torque values shall be determined by the manufacturer unless otherwise specified by the customer. The test shall be conducted as specified in ISO 19879.

5.3 Burst Test

Burst test shall be conducted at the minimum torque shown in the “37 Degree Flare End Swivel Nut” column of Table 5 and pressures shown in Table 6. All contact surfaces shall be lubricated with SAE 10W hydraulic oil prior to assembly. Test blocks and other mating test components for burst testing shall be unplated and hardened to 45 to 55 HRC. Adjustable fittings shall be backed out one full turn from finger tight position. The test shall be conducted as specified in ISO 19879.

5.4 Cyclic Endurance (Impulse) Test

Cyclic endurance test shall be conducted at the minimum torque shown in the “37 Degree Flare End Swivel Nut” column of Table 5 and pressures shown in Table 6. All threads and contact surfaces shall be lubricated with SAE 10W hydraulic oil prior to assembly. Test blocks and other mating test components for cyclic endurance testing shall be unplated and hardened to 45 to 55 HRC. Adjustable fittings shall be backed out one full turn from finger tight position. The test shall be conducted as specified in ISO 19879.

5.5 Hose Fitting/Tube Components Interface

Adapter interface and nut/sleeve components used in assemblies shall be capable of meeting proof, burst, cyclic endurance, overtorque, and repeated assembly requirements as shown in this document. For hose and tube assemblies, the lowest pressure rating of any component (including tube/hose material) used within the assembly shall become the working pressure of the assembly, as opposed to the working pressures listed in Table 6.

5.6 O-Ring

The standard O-ring used on SAE straight thread end for testing shall be nitrile (NBR) rubber with a durometer “A” hardness of 90, in compliance with type CH specified in SAE J515.

5.7 Overtorque test

Overtorque test shall be conducted at the torque shown in the “37 Degree Flare End Swivel Nut Overtorque” column of Table 5. All threads and contact surfaces shall be lubricated with SAE 10W hydraulic oil prior to assembly. Test blocks and other mating test components for overtorque testing shall be unplated and hardened to 40 to 50 HRC. Fitting swivel nuts and sleeves shall be capable of withstanding the overtorque qualification torque with no indication of failure. The test shall be conducted as specified in ISO 19879.

Definition of failure after torque testing:

a. Nut cannot be removed by hand after breakaway.

b. Nut cannot swivel freely by hand (nut and sleeve bonding is allowed).

c. Nut no longer conforms with the dimensional and performance requirements.

d. Any visible cracks or breakage, or plastic deformation on the swivel nut.

Documents
Document Sharing Hub

Full document details: SAE J514_1_202211

5.8 Repeated Assembly

Repeated assembly test shall be conducted at the maximum torque shown in the “37 Degree Flare End Swivel Nut” column of Table 5 and pressures shown in Table 6. All threads and contact surfaces shall be lubricated with SAE 10W hydraulic oil prior to assembly. Test blocks and other mating test components for repeated assembly testing shall be unplated and hardened to 45 to 55 HRC. Samples shall be assembled and disassembled ten times. Proof test per 5.2 shall be conducted following the first and tenth assembly. The test shall be conducted as specified in ISO 19879. The leakage test per ISO 19879 test procedure is not required unless requested by the customer.

Definition of failure after repeated assembly testing:

a. Nut cannot be removed by hand after breakaway.

b. Nut cannot swivel freely by hand (nut and sleeve bonding is allowed).

c. Nut no longer conforms with the dimensional and proof test requirements.

d. Any visible cracks or breakage, or plastic deformation on the swivel nut.

5.9 Test Data Form

Test data shall be reported on the test data form in ISO 19879.

6. PACKAGING AND MARKING

6.1 Marking

All connector bodies and tube nuts shall be permanently marked with individual supplier's trademark or code identifier, unless otherwise agreed upon by user and manufacturer.

6.2 Protection

By agreement between purchaser and supplier, sealing face of the 37 Degree connectors and threads (both internal and external) must be protected by the manufacturer from nicks and scratches detrimental to their function. All passages must be securely covered to prevent entrance of dirt or other contaminants prior to assembly and for parts distribution, handling, and storage. Paper caps and plugs are not permitted. Purchaser and Supplier should select protection that will reduce plastic landfill waste and environmental impact.

6.3 SAE J846 Ordering Designation, Part Identification Number (PIN)

By agreement between the manufacturer and user, the ordering designation from SAE J846 may be used to abbreviate the ordering of 37 degree connectors.

6.3.1 Connector Designation Code

Connectors are designated according to SAE J846. The connector designation consists of a basic code symbolizing in sequence the following: (a) the connector type, (b) the connector shape, and (c) the connector connecting ends. For a connector basic code example, see Figure 10.

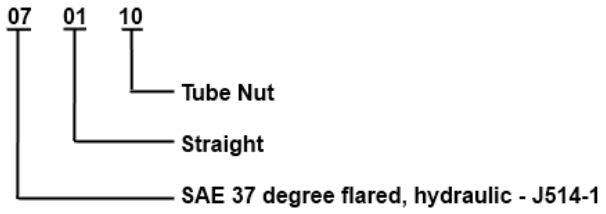

Figure 4 - Connector style designations

Documents
Document Sharing Hub
Full document details: SAE J514_1_202211

6.3.2 Style and Material Modifiers

Modifiers are added to the code to provide additional information. An “M” is inserted after the connector type to indicate a metric hex or wrench flat. Suffixes are to be added to indicate the style and material. (Refer to SAE J846 for more complete information.) An example of a complete code follows in Figure 10.

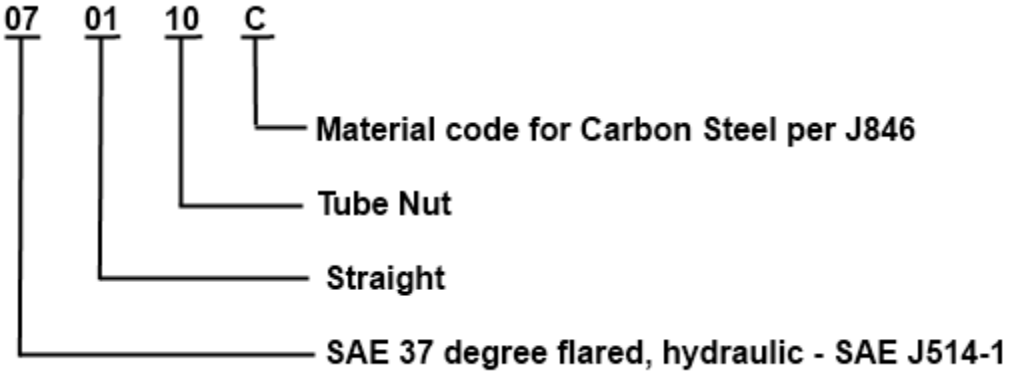

Figure 5 - Connector style designation with material modifier

6.3.3 Size Designation

The size is indicated by the nominal outside diameter of the tubing or nominal inside diameter of the hose and the port end size for stud connectors. These are added to the connector designation and modifiers. Example using a dash 12 37 degree tube end to a dash 12 inch SAE J1926-3 stud end on a straight connector in steel, use the following designation. The ordering designation is as follows; see Table 7 for additional samples.

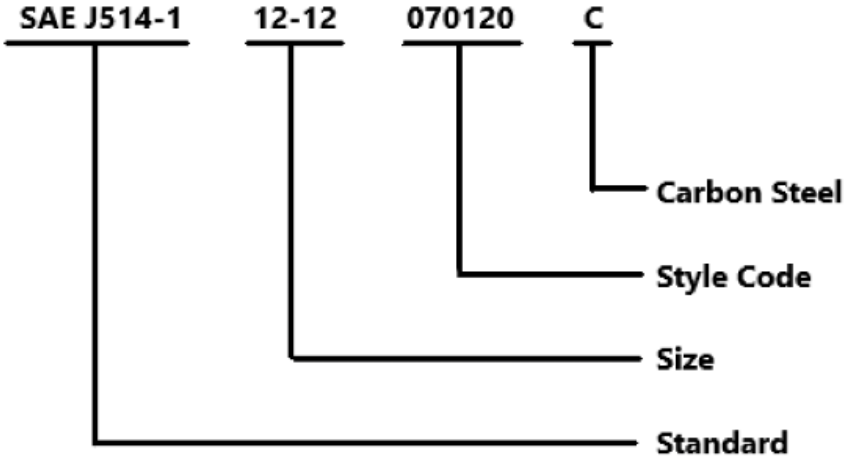

Figure 6 - Connector style, material, and size designation

Documents
Document Sharing Hub
Full document details: SAE J514_1_202211

Table 7 - Ordering code examples

	Connector Description	SAE Part Identification Number
a	To order a size -16 standard short nut (Figure 10) made from carbon (C) steel	SAE J514/1 16 070110 C
b	To order a size -16 bulkhead elbow connector (Figure 27) made from carbon (C) steel	SAE J514/1 16-16 070701 C
c	To order a jump size (-16 with a -12 branch) swivel run tee connector (Figure 37) made from carbon (C) steel	SAE J514/1 16-16-12 070432 C
d	To order a 37 degree straight thread elbow with a -12 37 degree tube end and -16 stud end per SAE J1926-3 (Figure 19) made from carbon steel with 90 durometer nitrile O-ring	SAE J514/1 12-16 070220 CN

NOTE:
Refer to SAE J846 for complete details.

7. NOTES

7.1 Assembly Information

Torque values listed in Table 5 are for controlled testing to establish compliance to the performance requirements set forth in Table 6. Recommended assembly torques by manufacturers may vary from Table 5.

Smaller sizes (-2 through -8) of 37 degree flare fittings are less tolerant to overtorque than the larger sizes. Overtorque in these sizes causes deformation of 37 degree cone of the male end. Excessive deformation of the cone results in loss of clamping force and, hence, loss of seal. It can also reduce flow area.

For installation information, refer to SAE J2593.

7.2 Identification Statement and Procurement Information

Use the following statement in test reports, catalogues, and sales literature when electing to comply with this part of SAE J514/1: “37 degree connectors conform to SAE J514/1: 37 degree flared fittings.”

The 37 degree flared tube fittings shall be as shown in Figures 8 to 39 and Tables 9 to 21, as well as Appendix B. Dimensions for double and single 37 degree flares on tubing to be used with these fittings are given in SAE J533.

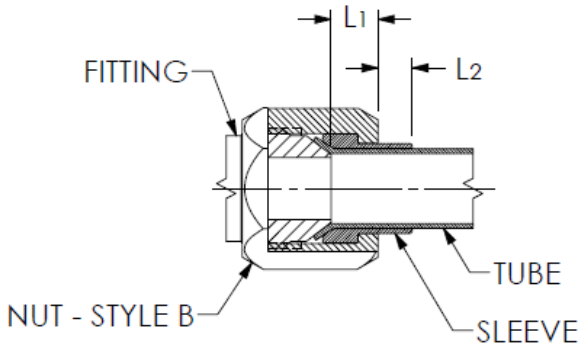

Figure 7A - Three piece tube assembly - Short Nut

Documents
Document Sharing Hub
Full document details: SAE J514_1_202211

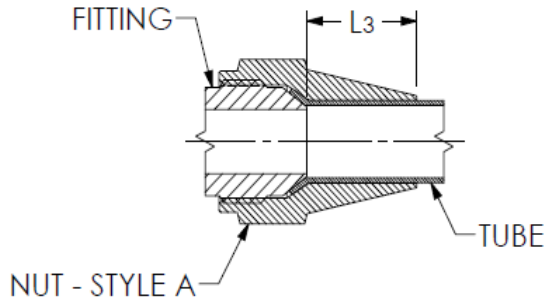

Figure 7B - Two piece tube assembly – Long Nut

Figure 7 - Details of 37 degree flared hydraulic tube fitting assemblies (Figure 1)

Table 8 - Dimensions of 37 degree flared hydraulic tube fitting assemblies (Figures 7A and 7B)

Dimensions are in millimeters

SAE Dash Size	Nominal Metric Tube OD	Nominal Inch Tube OD	Thread Inches	L_1 Ref	L_2 Ref	L_3 Ref
-2	--	3.18	5/16-24 UNF	4.8	3	12.2
-3	--	4.75	3/8-24 UNF	6.4	3	14.2
-4	6	6.35	7/16-20 UNF	4.8	4.3	15
-5	8	7.94	1/2-20 UNF	7.6	2.8	16.8
-6	10	9.52	9/16-18 UNF	7.1	4.8	17.5
-8	12	12.70	3/4-16 UNF	7.9	4.8	20.6
-10	16	15.88	7/8-14 UNF	9.7	6.9	23.9
-12	19	19.05	1-1/16-12 UN	9.1	6.4	26.2
-14	20	22.22	1-3/16-12 UN	9.7	7.9	30.2
-16	25	25.40	1-5/16-12 UN	8.6	10.4	33.3
-20	32	31.75	1-5/8-12 UN	8.6	9.9	38.1
-24	38	38.10	1-7/8-12 UN	12.7	14	38.9
-32	50	50.80	2-1/2-12 UN	14	13.5	44.4

Documents
Document Sharing Hub
Full document details: SAE J514_1_202211

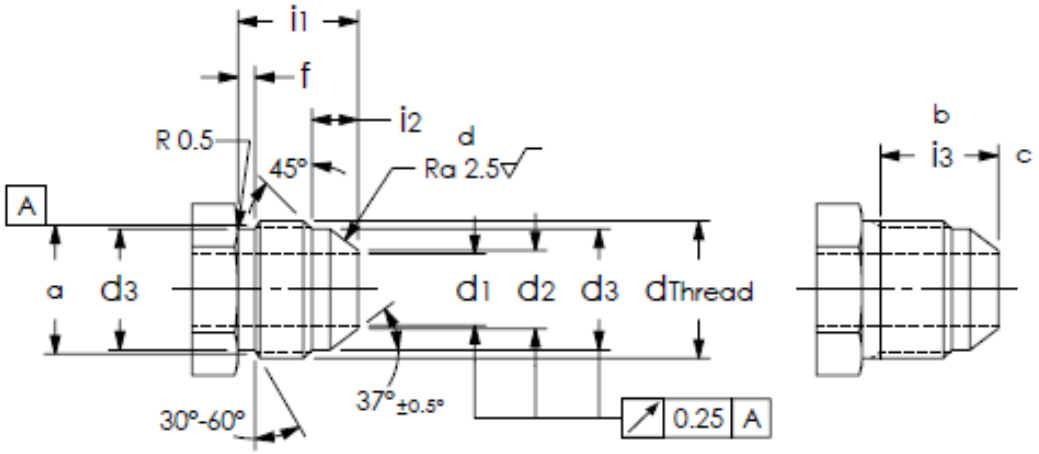

KEY:			
a	Pitch diameter	c	Minimum full thread depth
b	Optional construction for shapes	d	Maximum—no axial tool marks allowed on this surface; for spiral tool marks, a surface roughness value of 1.6 µm Ra maximum shall be used

Figure 8 - 37 degree flared connection

Table 9 - Dimensions of 37 degree flared connections (Figure 8)

Dimensions are in millimeters

SAE Dash Size	Nom Metric Tube OD	Nom Inch Tube OD	d(1) Thread Inches	d_1(2) Nom	d_1(2)(3) Ref Option	d_2(4) ±0.08	d_3 ±0.15	f ±0.4	i_1 ±0.4	i_2 ±0.2	i_3 Min
-2	--	1/8	5/16-24 UNF	1.6	-	2.11	6.25	2.0	11.4	4.7	11.0
-3	--	3/16	3/8-24 UNF	3.2	-	3.71	7.82	2.0	12.2	4.7	11.80
-4	6	1/4	7/16-20 UNF	4.4	-	4.9	9.15	2.3	14	5.1	13.6
-5	8	5/16	1/2-20 UNF	6	-	6.5	10.7	2.3	14	5.1	13.6
-6	10	3/8	9/16-18 UNF	7.5	-	8.1	12.1	2.5	14.1	5.2	13.75
-8	12	1/2	3/4-16 UNF	9.9	-	10.8	16.65	2.8	16.7	6.6	16.3
-10	16	5/8	7/8-14 UNF	12.3	-	13.7	19.5	3.1	19.3	7	18.85
-12	19	3/4	1-1/16-12 UN	15.5	-	16.85	23.85	3.6	21.9	8.2	21.55
-14	20	7/8	1-3/16-12 UN	18.3	18.0	20.02	27.03	3.6	22.6	8.2	22.20
-16	25	1	1-5/16-12 UN	21.4	21.5	23.2	30.2	3.6	23.1	8.2	22.75
-20	32	1-1/4	1-5/8-12 UN	27.4	27.5	29.15	38.15	3.6	24.3	9.5	23.95
-24	38	1-1/2	1-7/8-12 UN	33.3	33.5	35.1	44.5	3.6	27.5	9.8	27.15
-32	50	2	2-1/2-12 UN	45.2	45.0	47.75	60.35	3.6	33.9	11.9	33.5

(1) In accordance with ASME B1.1 (ISO 725).
(2) See Table 1B for tolerance.
(3) At manufacturer's option, alternate metric drills shown can be used in line with ISO 8434-2.
(4) d_2 diameter is the theoretical tangent point at the apex of the 37 degree seat.

Documents
Document Sharing Hub