FEDERAL SUPPLY CLASS
5340

MA14298

RATIONALE

MA14298 HAS BEEN REAFFIRMED TO COMPLY WITH THE SAE FIVE-YEAR REVIEW POLICY.

NOTICE

THIS DOCUMENT HAS BEEN TAKEN DIRECTLY FROM U.S. MILITARY SPECIFICATION DS14298 AND CONTAINS ONLY MINOR EDITORIAL AND FORMAT CHANGES REQUIRED TO BRING IT INTO CONFORMANCE WITH THE PUBLISHING REQUIREMENTS OF SAE TECHNICAL STANDARDS. THE INITIAL RELEASE OF THIS DOCUMENT IS INTENDED TO REPLACE DS14298. ANY PART NUMBERS ESTABLISHED BY THE ORIGINAL SPECIFICATION REMAIN UNCHANGED.

THE ORIGINAL MILITARY SPECIFICATION WAS ADOPTED AS AN SAE STANDARD UNDER THE PROVISIONS OF THE SAE TECHNICAL STANDARDS BOARD (TSB) RULES AND REGULATIONS (TSB 001) PERTAINING TO ACCELERATED ADOPTION OF GOVERNMENT SPECIFICATIONS AND STANDARDS. TSB RULES PROVIDE FOR (A) THE PUBLICATION OF PORTIONS OF UNREVISED GOVERNMENT SPECIFICATIONS AND STANDARDS WITHOUT CONSENSUS VOTING AT THE SAE COMMITTEE LEVEL, AND (B) THE USE OF THE EXISTING GOVERNMENT SPECIFICATION OR STANDARD FORMAT.

UNDER DEPARTMENT OF DEFENSE POLICIES AND PROCEDURES, ANY QUALIFICATION REQUIREMENTS AND ASSOCIATED QUALIFIED PRODUCTS LISTS ARE MANDATORY FOR DOD CONTRACTS. ANY REQUIREMENT RELATING TO QUALIFIED PRODUCTS LISTS (QPL'S) HAS NOT BEEN ADOPTED BY SAE AND IS NOT PART OF THIS SAE TECHNICAL DOCUMENT.

SAE values your input. To provide feedback on this Technical Report, please visit http://www.sae.org/technical/standards/MA14298

THIRD ANGLE PROJECTION

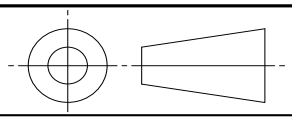

ISSUED 2000-08 REAFFIRMED 2015-04

CUSTODIAN: G-3

PROCUREMENT SPECIFICATION: MIL-C-8603

AEROSPACE STANDARD

CLAMP ASSEMBLY, CUSHIONED, METRIC

MA14298
SHEET 1 OF 5

SAE Technical Standards Board Rules provide that: "This report is published by SAE to advance the state of technical and engineering sciences. The use of this report is entirely voluntary, and its applicability and suitability for any particular use, including any patent infringement arising therefrom, is the sole responsibility of the user."

SAE reviews each technical report at least every five years at which time it may be revised, reaffirmed, stabilized, or cancelled. SAE invites your written comments and suggestions.

Copyright 2015 SAE International
All rights reserved. No part of this publication may be reproduced, stored in a retrieval system or transmitted, in any form or by any means, electronic, mechanical, photocopying, recording, or otherwise, without the prior written permission of SAE.

TO PLACE A DOCUMENT ORDER: Tel: 877-606-7323 (inside USA and Canada) Tel: +1 724-776-4970 (outside USA)
Fax: 724-776-0790 Email: CustomerService@sae.org SAE WEB ADDRESS: http://www.sae.org

Documents Document Sharing Hub
Full document details: SAE MA14298

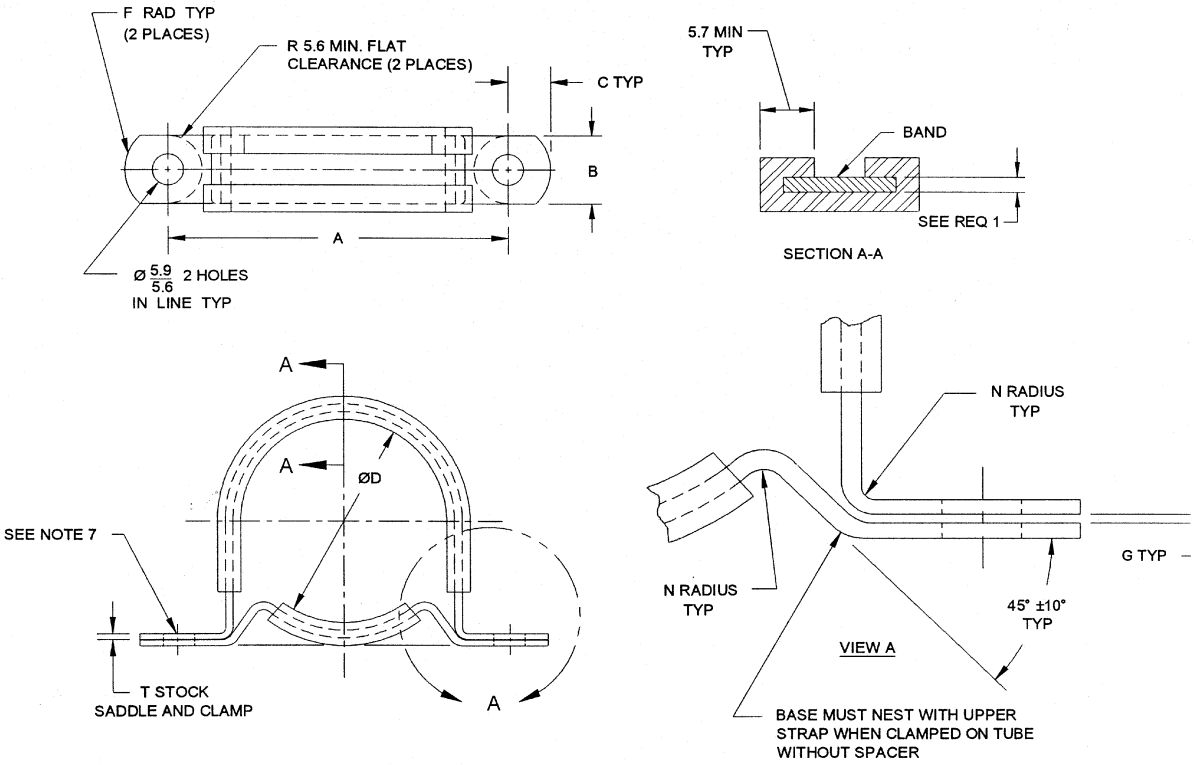

REQUIREMENTS:

1. MATERIAL:

BAND - ALUMINUM ALLOY, 2024-0, HEAT TREATED TO T42 CONDITION IN ACCORDANCE WITH MIL-H-6088. CORROSION RESISTANT STEEL, TYPE 302 IN ACCORDANCE WITH MIL-S-5059 OR TYPE 321 IN ACCORDANCE WITH AMS 5510-78.

CUSHION - CHLOROPRENE RUBBER, 65-75 DUROMETER "A", IN ACCORDANCE WITH AMS 3209-81 AND PROCUREMENT SPECIFICATION, 1.6mm THICK.
SILICONE RUBBER, 55-65 DUROMETER "A," IN ACCORDANCE WITH AMS 3303-75, 1.6mm THICK.
POLYTETRAFLUOROETHYLENE (PTFE) IN ACCORDANCE WITH ASTM D1457-81, TYPE I, 0.6mm THICK.
FLUOROSILICONE RUBBER, IN ACCORDANCE WITH MIL-R-25988, TYPE II, CLASS 1, GRADE 60,1.6mm THICK.
NITRILE RUBBER, 65-75 DUROMETER "A", IN ACCORDANCE WITH AMS 3215-78 AND PROCUREMENT SPECIFICATION, 1.6mm THICK.
ETHYLENE PROPYLENE IN ACCORDANCE WITH PROCUREMENT SPECIFICATION, 1.6mm THICK.

2. FINISH: CRES –PASSIVATED IN ACCORDANCE WITH ASTM A380-78.
ALUMINUM ALLOY – CHEMICAL FILM PER MIL-C-5541, CLASS 1A.

3. SURFACE TREATMENT: CUSHIONS FABRICATED FROM PTFE SHALL BE SODIUM TREATED IN ACCORDANCE WITH THE SURFACE TREATMENT PARAGRAPH OF AMS 2491-81 TO REDUCE THE MATERIAL'S LUBRICITY. ALL OTHER PARAGRAPHS OF AMS 2491-81 SHALL NOT APPLY.

AVA Documents
Document Sharing Hub
Full document details: SAE MA14298