FEDERAL SUPPLY CLASS
5340

RATIONALE

MA2152/1 HAS BEEN REAFFIRMED TO COMPLY WITH THE SAE FIVE-YEAR REVIEW POLICY.

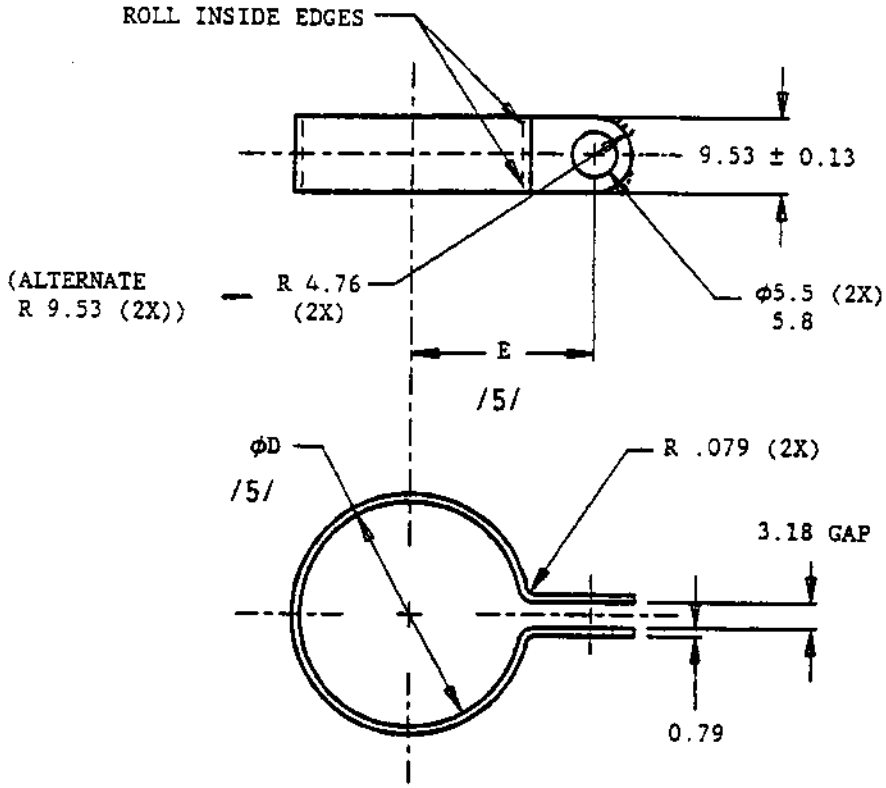

NOTE: GEOMETRIC DIMENSIONING AND TOLERANCING ARE SUBJECT TO INTERPRETATION OF ANSI 14.5M-1982.

FIGURE 1

TABLE 1 - DIMENSIONAL TABULATION

Ø D, Coded in One Millimeter Increments Ref.	E /5/
Tolerance	±0.38
003 to 008	(D/2) + 6.35
009 to 024	(D/2) + 7.14
025 to 152	(D/2) + 7.95

SAE values your input. To provide feedback on this Technical Report, please visit http://www.sae.org/technical/standards/MA2152/1

THIRD ANGLE PROJECTION

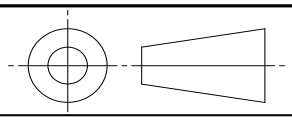

ISSUED 1991-04 REAFFIRMED 2015-04

CUSTODIAN: G-3/G-3E

PROCUREMENT SPECIFICATION: MA2150

AEROSPACE STANDARD

CLAMP, CENTER MOUNT, BARE METAL, ALUMINUM, METRIC

MA2152/1
SHEET 1 OF 2

SAE Technical Standards Board Rules provide that: "This report is published by SAE to advance the state of technical and engineering sciences. The use of this report is entirely voluntary, and its applicability and suitability for any particular use, including any patent infringement arising therefrom, is the sole responsibility of the user."

SAE reviews each technical report at least every five years at which time it may be revised, reaffirmed, stabilized, or cancelled. SAE invites your written comments and suggestions.

Copyright 2015 SAE International
All rights reserved. No part of this publication may be reproduced, stored in a retrieval system or transmitted, in any form or by any means, electronic, mechanical, photocopying, recording, or otherwise, without the prior written permission of SAE.
TO PLACE A DOCUMENT ORDER: Tel: 877-606-7323 (inside USA and Canada) Fax: 724-776-0790 Tel: +1 724-776-4970 (outside USA) Email: CustomerService@sae.org SAE WEB ADDRESS: http://www.sae.org

Documents Document Sharing Hub

Full document details: SAE MA2152_1

GENERAL NOTES:

1. MATERIALS: BAND - ALUMINUM ALLOY 2024-0 PER QQ-A-250/5

2. HEAT TREATMENT: BAND - HEAT TREAT TO CONDITION T42 PER MIL-H-6088

3. CLAMP BAND HARDNESS: 100 HB

4. FINISH: BAND - CHEMICAL FILM PER MIL-C-5541 CLASS 1A

/5/ DIAMETER "D" IS THE NOMINAL DIAMETER FOR WHICH A CLAMP SIZE IS INTENDED FOR USE. DIAMETER "D" AND DIMENSION "E" SHALL BE MEASURED WITH THE CLAMP INSTALLED ON A MANDREL OF "D" DIAMETER ±0.025 AND A 3.18 ± 0.013 GAP SPACER BETWEEN UPPER AND LOWER FEET AS SHOWN.

6. PROCUREMENT SPECIFICATION: MA2150 (EXCEPT VIBRATION TEST)

/7/ IDENTIFICATION: MARK THE COMPLETE STANDARD PART NUMBER AND MANUFACTURER'S NAME, TRADEMARK OR CAGE NUMBER ON THE BAND ABOVE THE THEORETICAL CENTERLINE PER AS478 (2A1)

8. SURFACE TEXTURE (SEE MA2150)

9. METAL BANDS SHALL HAVE ALL BURRS AND SHARP EDGES REMOVED

10. DIMENSIONS IN MILLIMETERS. UNLESS OTHERWISE SPECIFIED TOLERANCES: LINEAR DIMENSIONS X.XX ± 0.25, X.X ± 0.76, ANGLES ± 0.035 RADIANS

11. PART NUMBER: THE PART NUMBER SHALL CONSIST OF THE FOLLOWING (IN SEQUENCE)
    1. THE LETTERS "MA"
    2. THE GENERAL SPECIFICATION NUMBER
    3. A SLASH AND SLASH NUMBER OF THIS SPECIFICATION SHEET
    4. A DASH AND THE APPROPRIATE SIZE CODE FROM TABLE 1

    EXAMPLE: MA2152/1 - 008

    - 008 — SIZE CODE FROM TABLE 1 TO CODE "D" DIAMETER
    - /1 — SPECIFICATION SHEET NUMBER

12. DO NOT USE UNASSIGNED DASH NUMBERS (SEE TABLE 1)

AVA Documents
Document Sharing Hub

Full document details: SAE MA2152_1