REV. B

MA3426™

FEDERAL SUPPLY CLASS
5310

RATIONALE

THIS DOCUMENT HAS BEEN DETERMINED TO CONTAIN BASIC AND STABLE TECHNOLOGY WHICH IS NOT DYNAMIC IN NATURE.

STABILIZED NOTICE

THIS DOCUMENT HAS BEEN DECLARED "STABILIZED" BY THE SAE E-25 GENERAL STANDARDS FOR AEROSPACE AND PROPULSION SYSTEMS COMMITTEE AND WILL NO LONGER BE SUBJECTED TO PERIODIC REVIEWS FOR CURRENCY. USERS ARE RESPONSIBLE FOR VERIFYING REFERENCES AND CONTINUED SUITABILITY OF TECHNICAL REQUIREMENTS. NEWER TECHNOLOGY MAY EXIST.

ISSUED 1985-12 REAFFIRMED 2006-05 REVISED 2016-04 STABILIZED 2021-05

For more information on this standard, visit
https://www.sae.org/standards/content/MA3426B

THIRD ANGLE PROJECTION

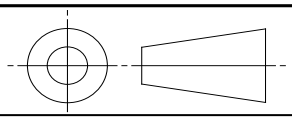

CUSTODIAN: E-25

PROCUREMENT SPECIFICATION: MA1937

METRIC AEROSPACE STANDARD

NUT, CASTELLATED, HEX - UNS S66286,
SILVER PLATE, MJ THREAD,
METRIC

MA3426™

REV. B

SAE Executive Standards Committee Rules provide that: " This report is published by SAE to advance the state of technical and engineering sciences. The use of this report is entirely voluntary, and its applicability and suitability for any particular use, including any patent infringement arising therefrom, is the sole responsibility of the user."

SAE reviews each technical report at least every five years at which time it may be revised, reaffirmed, stabilized, or cancelled. SAE invites your written comments and suggestions.

Copyright © 2021 SAE International
All rights reserved. No part of this publication may be reproduced, stored in a retrieval system or transmitted, in any form or by any means, electronic, mechanical, photocopying, recording, or otherwise, without the prior written permission of SAE.

TO PLACE A DOCUMENT ORDER: **Tel: 877-606-7323 (inside USA and Canada)** **Tel: +1 724-776-4970 (outside USA)**
Fax: 724-776-0790 **Email: CustomerService@sae.org** **SAE WEB ADDRESS: http://www.sae.org**

Documents Document Sharing Hub
Full document details: SAE MA3426B

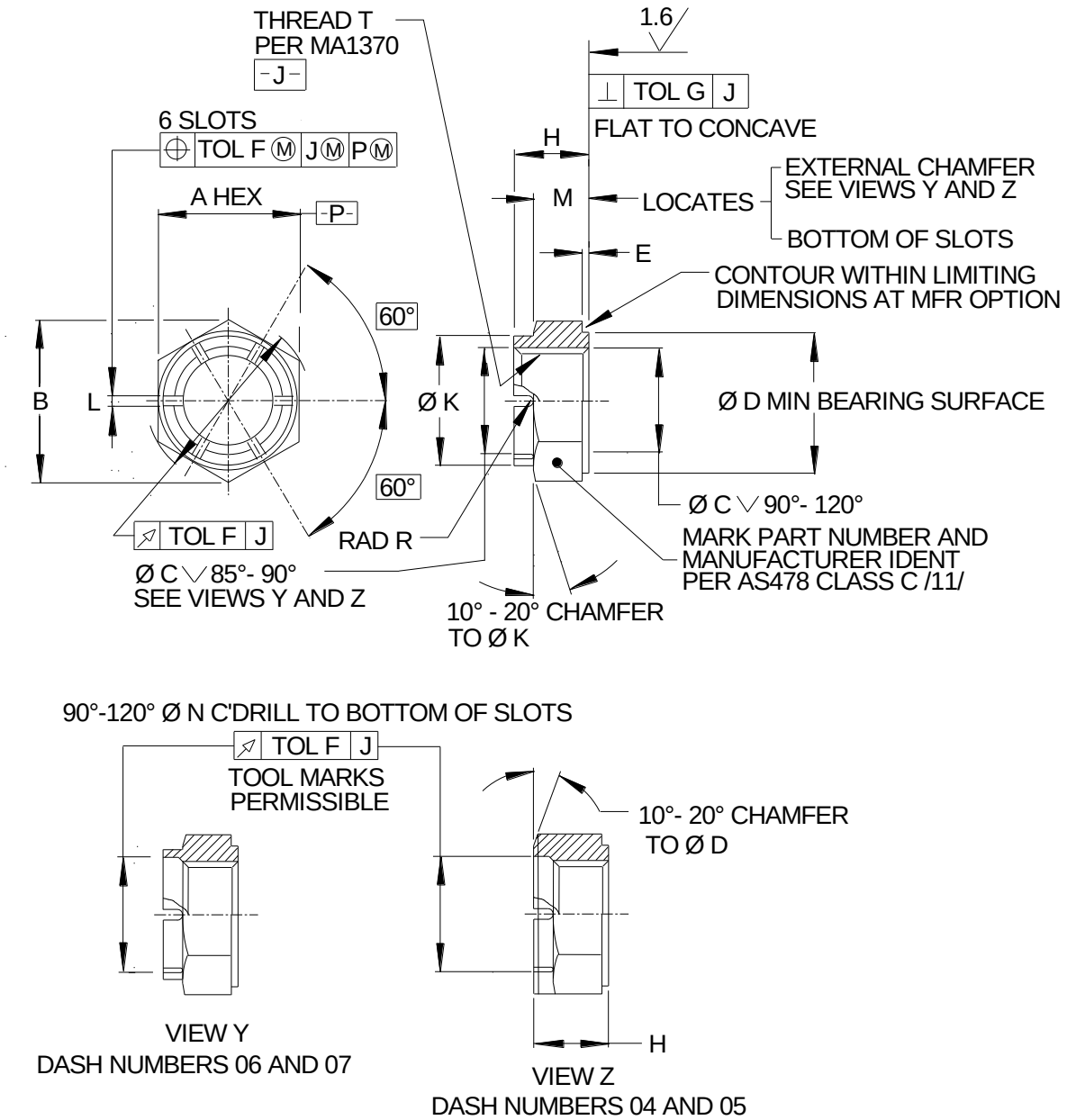

FIGURE 1 - DIMENSIONS

AVA Documents
Document Sharing Hub
Full document details: SAE MA3426B