FEDERAL SUPPLY CLASS
4720

RATIONALE

MA4571 HAS BEEN REAFFIRMED TO COMPLY WITH THE SAE FIVE-YEAR REVIEW POLICY.

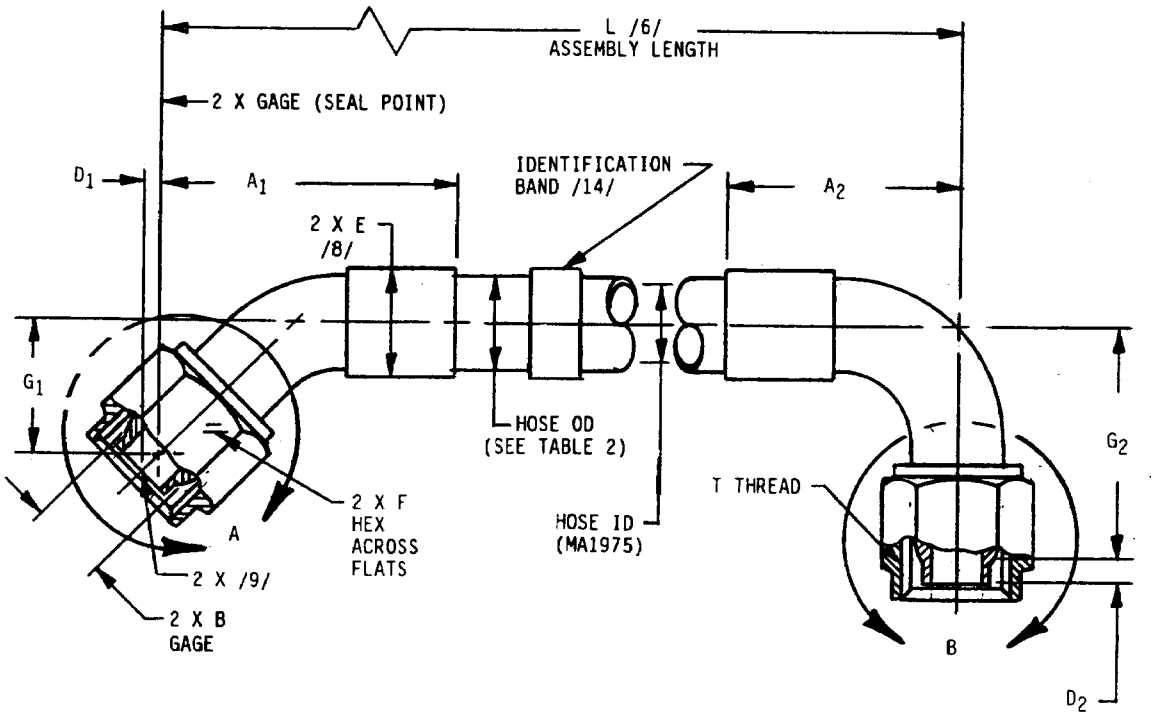

FIGURE 1 - FLARELESS HOSE ASSEMBLY
45° ELBOW TO 90° ELBOW

SAE values your input. To provide feedback on this Technical Report, please visit http://www.sae.org/technical/standards/MA4571

THIRD ANGLE PROJECTION

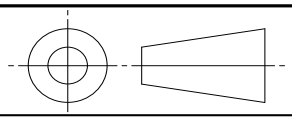

ISSUED 1994-05 REAFFIRMED 2015-04

CUSTODIAN: G-3/G-3D

PROCUREMENT SPECIFICATION: /2/ MA1975

AEROSPACE STANDARD

HOSE ASSEMBLY, PTFE, ARAMID REINFORCED, STANDARD DUTY, 21 000/28 000 KPA, 135 °C, TITANIUM FITTINGS, FLARELESS, 45° TO 90°, METRIC

MA4571
SHEET 1 OF 8

SAE Technical Standards Board Rules provide that: "This report is published by SAE to advance the state of technical and engineering sciences. The use of this report is entirely voluntary, and its applicability and suitability for any particular use, including any patent infringement arising therefrom, is the sole responsibility of the user."

SAE reviews each technical report at least every five years at which time it may be revised, reaffirmed, stabilized, or cancelled. SAE invites your written comments and suggestions.

Copyright 2015 SAE International
All rights reserved. No part of this publication may be reproduced, stored in a retrieval system or transmitted, in any form or by any means, electronic, mechanical, photocopying, recording, or otherwise, without the prior written permission of SAE.

TO PLACE A DOCUMENT ORDER: **Tel: 877-606-7323 (inside USA and Canada)** **Tel: +1 724-776-4970 (outside USA)**
Fax: 724-776-0790 **Email: CustomerService@sae.org** **SAE WEB ADDRESS: http://www.sae.org**

Documents Document Sharing Hub
Full document details: SAE MA4571

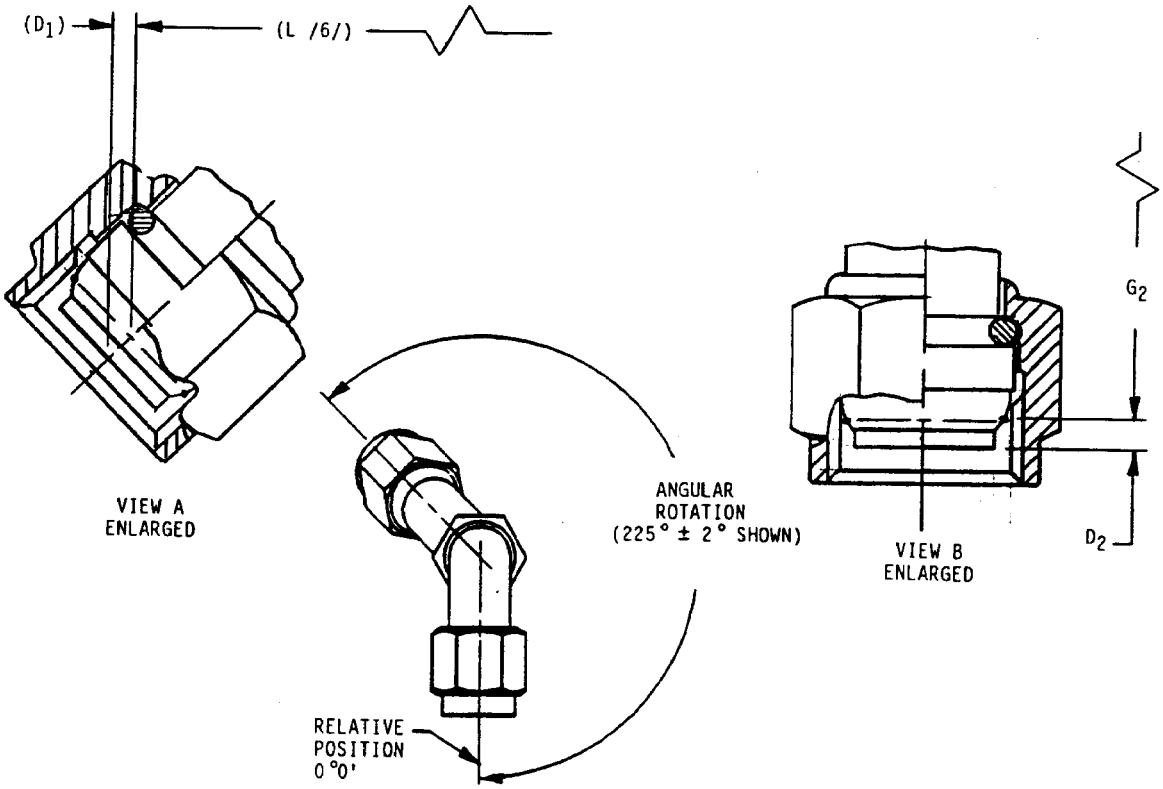

FIGURE 2

Documents
Document Sharing Hub
Full document details: SAE MA4571

TABLE 1 - ASSEMBLY DIMENSIONS IN MM

BASIC HOSE ASSEMBLY NUMBER MA4571 SIZE CODE	(HOSE SIZE)	(THREAD T MA1370 EXT INT 4H5H)	ID MIN	A1 MAX	A2 MAX	B GAGE BASIC	D1	D2	E /8/ WITHOUT SLEEVING MAX	(F HEX)	G1 MIN	G1 MAX	G2 MIN	G2 MAX	BALL SIZE THRU MS19059 DASH NO MIN /7/	BALL SIZE THRU MIN /7/
E	6	MJ12x1.25	5.4	54.9	47.8	7.5	2.8	4.1	18	14	8.9	12.1	16.4	20.1	4807	2.77
G	10	MJ16x1.5	7.6	62.5	55.4	11.5	3.1	4.1	21	17	9.5	12.7	18.2	21.3	4812	4.78
H	12	MJ18x1.5	9.9	69.6	64.3	13.5	3.3	4.8	25	22	11.1	14.2	21.5	24.7	4816	7.95
J	16	MJ22x1.5	12.3	96.2	85.8	17.5	3.6	5.1	30	27	13.8	17.0	27.6	30.8	4818	9.53
K	20	MJ27x1.5	15.3	103.3	100.1	21.5	4.1	5.8	35	32	14.7	17.9	32.4	35.6	4821	11.91
M	25	MJ33x1.5	21.6	118.0	113.9	26.6	5.3	7.6	43	41	18.2	21.3	38.1	41.3	4829	18.26
N	32	MJ42x2	27.9	141.9	132.7	33.7	7.6	10.2	60	46	19.1	22.2	43.2	46.4	4834	22.23
P	40	TBD	TBD	TBD	TBD	TBD	TBD	TBD	TBD	TBD	TBD	TBD	TBD	TBD	TBD	TBD

AVA Documents Document Sharing Hub

Full document details: SAE MA4571