FEDERAL SUPPLY CLASS
4720

RATIONALE

MA4625 HAS BEEN REAFFIRMED TO COMPLY WITH THE SAE FIVE-YEAR REVIEW POLICY.

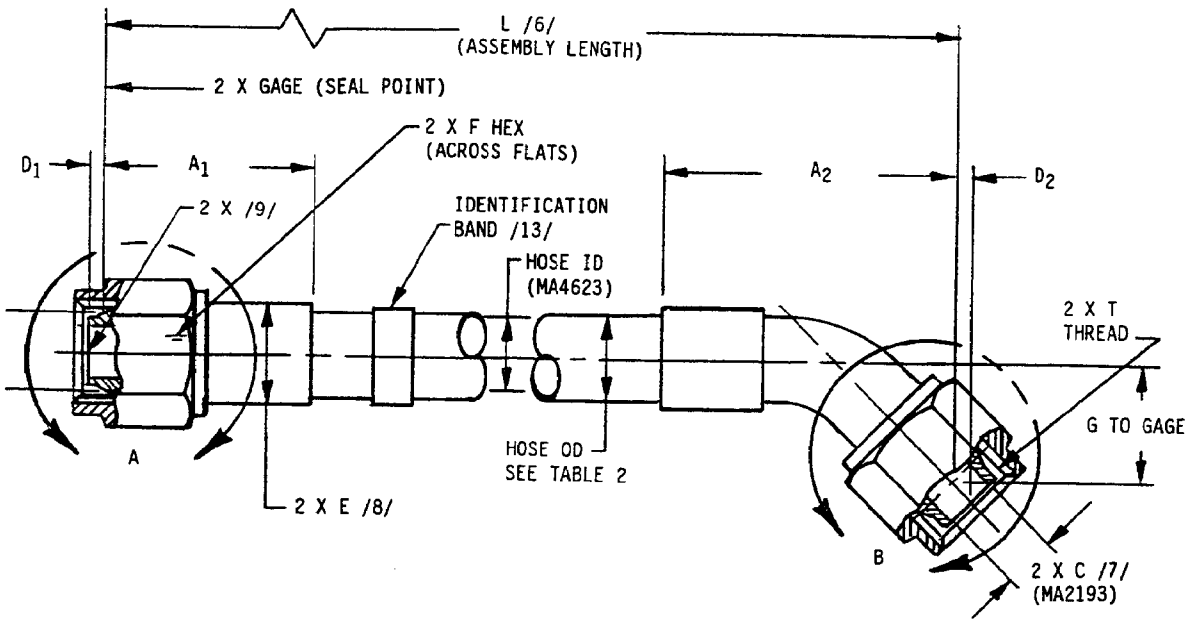

FIGURE 1 - FLARELESS HOSE ASSEMBLY
STRAIGHT TO 45° ELBOW

SAE values your input. To provide feedback on this Technical Report, please visit http://www.sae.org/technical/standards/MA4625

THIRD ANGLE PROJECTION

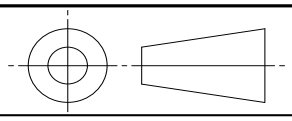

ISSUED 1994-05 REAFFIRMED 2015-04

CUSTODIAN: G-3/G-3D

PROCUREMENT SPECIFICATION: /2/ MA4623

AEROSPACE STANDARD

HOSE ASSEMBLY, PTFE, PARA ARAMID REINFORCED, HEAVY-DUTY,
21 000 KPA, 135 ºC, FLARELESS, TITANIUM FITTINGS,
JUMP SIZES, STRAIGHT TO 45º, METRIC

MA4625
SHEET 1 OF 6

SAE Technical Standards Board Rules provide that: "This report is published by SAE to advance the state of technical and engineering sciences. The use of this report is entirely voluntary, and its applicability and suitability for any particular use, including any patent infringement arising therefrom, is the sole responsibility of the user."

SAE reviews each technical report at least every five years at which time it may be revised, reaffirmed, stabilized, or cancelled. SAE invites your written comments and suggestions.

Copyright 2015 SAE International
All rights reserved. No part of this publication may be reproduced, stored in a retrieval system or transmitted, in any form or by any means, electronic, mechanical, photocopying, recording, or otherwise, without the prior written permission of SAE.
TO PLACE A DOCUMENT ORDER: Tel: 877-606-7323 (inside USA and Canada) Tel: +1 724-776-4970 (outside USA)
Fax: 724-776-0790 Email: CustomerService@sae.org SAE WEB ADDRESS: http://www.sae.org

Documents
Document Sharing Hub

Full document details: SAE MA4625

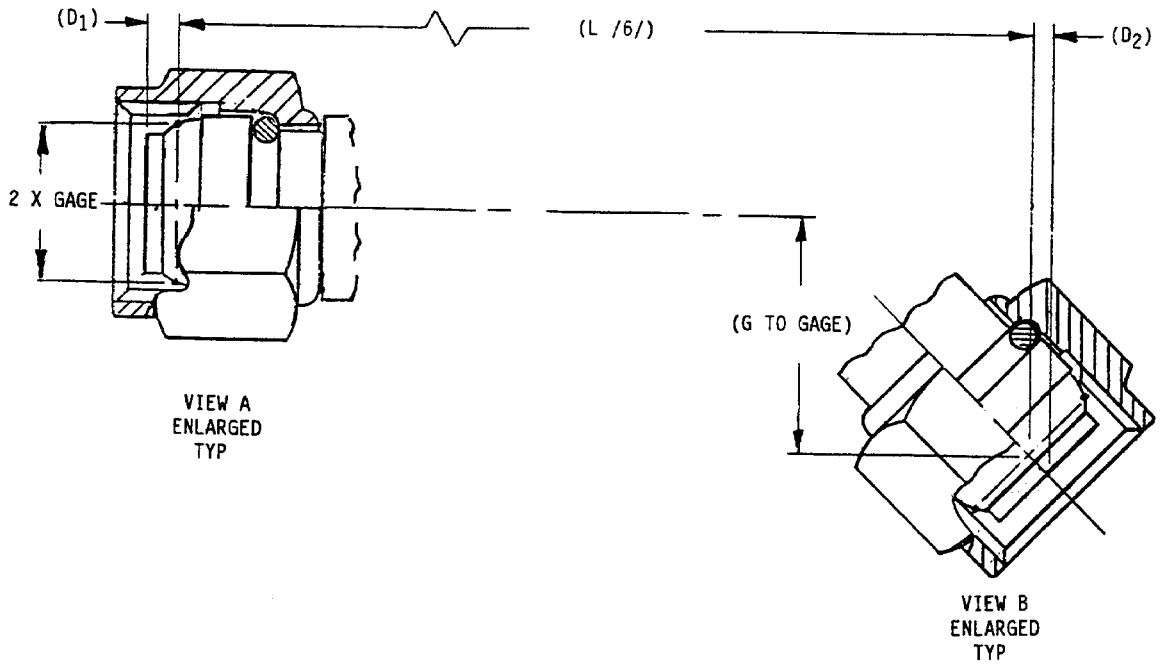

FIGURE 2

AVA Documents
Document Sharing Hub
Full document details: SAE MA4625