USCAR-17 SUPPLEMENT

SAE/
USCAR18-4
July2016

Documents
Document Sharing Hub

Full document details: SAE USCAR18-4

ISBN: 978-0-7680-8382-8

Documents
Document Sharing Hub

Full document details: SAE USCAR18-4

SAE/USCAR-18 REVISION 4	Issued 2002-02 Revised 2016-07
USCAR-17 SUPPLEMENT	

TABLE OF CONTENTS

1. SCOPE 2

2. REFERENCES 2

3. SINGLE CONTACT 3

3.1 Male Unsealed Connector 3
3.2 Female Connector 6
3.3 Polarizing Ribs 7
3.4 Color Coding and Applications 8

4. TWO WAY CONTACTS 9

4.1 Coding 9
4.2 Device Side Interface 9
4.3 Colors and Applications 10

5. PACKAGING INFORMATION 11

APPENDIX A DEFINITIONS 12
APPENDIX B HYBRID (RF and DC) CONNECTOR INTERFACE 13
APPENDIX C APPROVED CLIP SLOT 16
APPENDIX D REVISIONS 17

The research data, analysis, conclusion, opinions and other contents of this document are solely the product of the authors. Neither the SAE International (SAE) nor the United States Council for Automotive Research (USCAR LLC) certifies the compliance of any products with the requirements of nor makes any representations as to the accuracy of the contents of this document nor to its applicability for purpose. It is the sole responsibility of the user of this document to determine whether or not it is applicable for their purposes.

Copyright © 2016 USCAR

All rights reserved.

Printed in U.S.A.

QUESTIONS REGARDING THIS DOCUMENT: (248) 273-2470 FAX (248) 273-2494
TO PLACE A DOCUMENT ORDER: (724) 776-4970 FAX (724) 776-0790

Documents
Document Sharing Hub

Full document details: SAE USCAR18-4

1. SCOPE

This document is a supplement to SAE/USCAR 17 and is intended to give recommended usages for one and two-way RF connectors and dimensional requirements for 2-way RF connectors and hybrid (RF & DC power) connectors which are not currently specified elsewhere. The radio frequency (RF) connector interface specified herein is suited for unsealed and sealed automobile applications up to 6 GHz and is intended for in-line, board mount, device mount, straight or angled applications. Dimensional requirements are specified in this document to ensure interchangeability. Compliance with the dimensional requirements of this specification will not guarantee interoperability between different suppliers mating connectors. It is the supplier responsibility to ensure RF performance requirements are met with other suppliers mating connectors. Performance requirements are specified in SAE/USCAR-2, and in SAE/USCAR-17.

2. REFERENCES

DIN 72594-1, - Road vehicles – Radio frequency interface – Dimensions and electrical requirements.

ISO 20860-1, - Road vehicles – 50Ω impedance radio frequency connection system interface –
Part 1: Dimensions and electrical requirements

SAE/USCAR-2 Performance Specification for Automotive Electrical Connector Systems

SAE/USCAR-17 Performance Specification for Automotive RF Connector Systems

The SAE performance specs can be obtained from the following location:

SAE
400 Commonwealth Dr
Warrendale, PA 15096-0001
USA
www.sae.org

RAL RAL color charts are available from:

RAL
Sieburger Strasse 39
D-53757 Sankt Augustin
Telefon 49 22 41 - 16 05-0
Telefax 490 22 41 - 16 05-16
www.ral.de

Dorn Color, Inc.
11555 Berea Rd.
Cleveland, OH 44102
Phone: 216-634-2252
Fax: 216-634-2822
www.dorncolor.com

Documents
Document Sharing Hub
Full document details: SAE USCAR18-4

3. SINGLE CONTACT

3.1 Male Unsealed Connector

Unsealed Connector must meet dimensions shown in FIGURE 1, 2A and 2X.
Male Sealed Connector must meet dimensions shown in 3.1 and FIGURES 2B, 2C, and 2D.

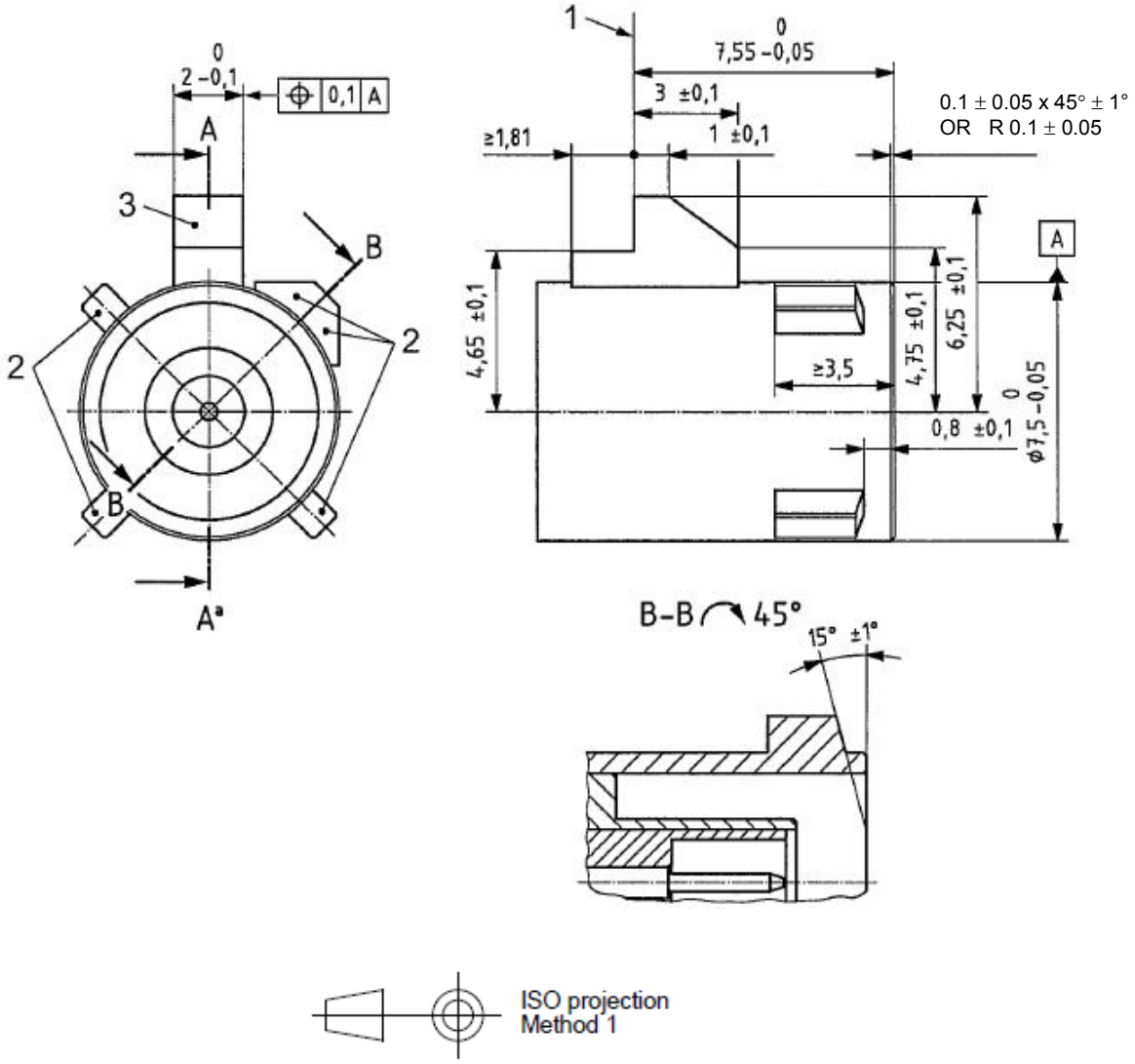

Notes:

1 Reference Plane
2 Polarization Ribs (dimensions per Figure 5)
3 Locking Feature

Figure 1 - Male Connector Dimensions

Documents
Document Sharing Hub
Full document details: SAE USCAR18-4

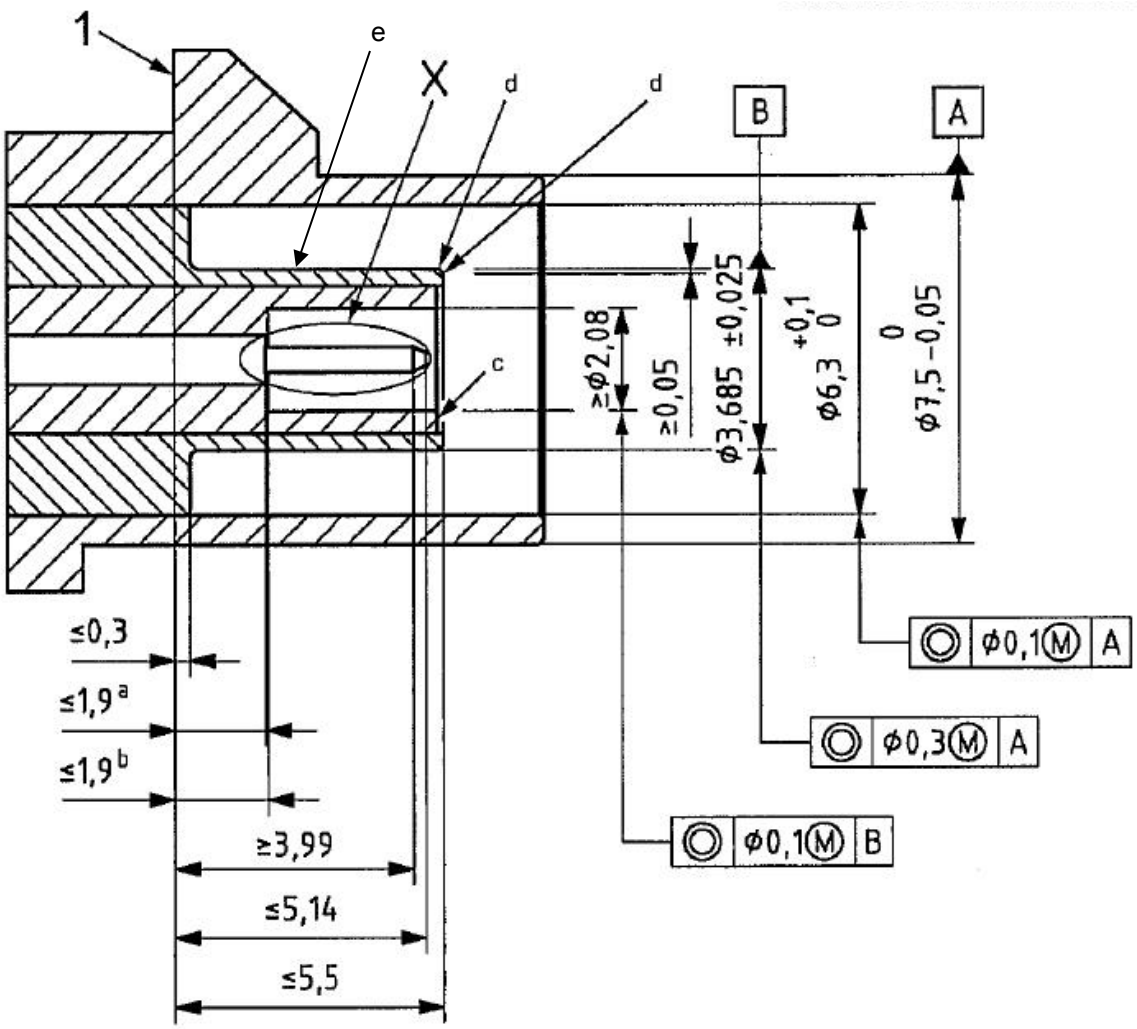

Notes:

1 Reference Plane
a Center Contact (See FIGURE 2X)
b Dielectric Minimum Dimension
c Dielectric must not extend past the front plane of the outer contact
d No sharp burrs or edges
e Outer Contact to be selectively plated with Ni or Sn when required to meet electrical performance

Figure 2A - Male Cross Section

Documents
Document Sharing Hub

Full document details: SAE USCAR18-4