SCTE · ISBE

STANDARDS

Interface Practices Subcommittee

AMERICAN NATIONAL STANDARD

ANSI/SCTE 96 2020

Cable Telecommunications Testing Guidelines

Documents
Document Sharing Hub

Full document details: SCTE 96 2020

NOTICE

The Society of Cable Telecommunications Engineers (SCTE) / International Society of Broadband Experts (ISBE) Standards and Operational Practices (hereafter called "documents") are intended to serve the public interest by providing specifications, test methods and procedures that promote uniformity of product, interchangeability, best practices and ultimately the long-term reliability of broadband communications facilities. These documents shall not in any way preclude any member or non-member of SCTE•ISBE from manufacturing or selling products not conforming to such documents, nor shall the existence of such standards preclude their voluntary use by those other than SCTE•ISBE members.

SCTE•ISBE assumes no obligations or liability whatsoever to any party who may adopt the documents. Such adopting party assumes all risks associated with adoption of these documents, and accepts full responsibility for any damage and/or claims arising from the adoption of such documents.

Attention is called to the possibility that implementation of this document may require the use of subject matter covered by patent rights. By publication of this document, no position is taken with respect to the existence or validity of any patent rights in connection therewith. SCTE•ISBE shall not be responsible for identifying patents for which a license may be required or for conducting inquiries into the legal validity or scope of those patents that are brought to its attention.

Patent holders who believe that they hold patents which are essential to the implementation of this document have been requested to provide information about those patents and any related licensing terms and conditions. Any such declarations made before or after publication of this document are available on the SCTE•ISBE web site at http://www.scte.org.

All Rights Reserved

© Society of Cable Telecommunications Engineers, Inc. 2020
140 Philips Road
Exton, PA 19341

Documents
Document Sharing Hub

Full document details: SCTE 96 2020

TABLE OF CONTENTS

1.0 SCOPE 4

2.0 DEFINITIONS AND ACRONYMS 4

3.0 TEST PLAN CONSIDERATIONS 9

4.0 TEST EQUIPMENT 14

5.0 THE TOTAL TEST SYSTEM 33

6.0 MEASUREMENT ACCURACY 41

7.0 MEASUREMENT RECORDS 45

8.0 REFERENCE INFORMATION 46

LIST OF FIGURES

NO TABLE OF FIGURES ENTRIES FOUND.

LIST OF TABLES

TABLE 1 - FIXED CHANNEL FILTER REQUIREMENTS 28

TABLE 2 – CTB MEASUREMENT ACCURACY ANALYSIS 43

TABLE 3 - POWER (10*LOG) ADDITION 47

TABLE 4 - VOLTAGE OR CURRENT (20*LOG) ADDITION 48

Documents
Document Sharing Hub

Full document details: SCTE 96 2020

1.0 SCOPE

This document is identical to SCTE 96 2013 except for informative components which may have been updated such as the title page, NOTICE text, headers and footers. No normative changes have been made to this document.

The test procedures that reference this document are intended to allow a competent technician or engineer to perform the tasks of determining, to a reasonable degree of certainty, the level of performance for the various parameters detailed. The procedures are general in nature and with sufficient forethought and preparation, can be adapted to individual devices, cascades or complete systems. The primary focus for these procedures is for bench or laboratory testing, but the principles discussed are equally applicable to field testing. When the suggestions made in this document conflict with the detailed steps of a specific procedure, the specific test procedure will take precedence.

In order to maintain the simplicity and reduce the overall size of the individual procedures, most theoretical and practical discussions regarding test equipment, methodology and variations in techniques, as well as information which is generic or repetitive in nature is discussed in this document. This will also allow alterations and/or updates to be handled more easily by reducing the total number of documents (or sections) which will be affected. Specific information or data required for a single test, or a limited number of tests, will be found in those procedures as needed.

Measurements can normally be separated into two types, absolute and relative. Absolute measurements are used for determining such items as signal levels, modulation deviation, etc. Relative measurements are made with respect to a reference level or parameter and some examples are distortion, frequency flatness, depth of modulation, etc. Absolute measurements are typically more difficult to make within the same tolerance limits as relative measurements since more measurement tolerances within the test equipment and test configuration must be considered. Relative measurements are often quite accurate since many of theses tolerances are cancelled in the final calculations, especially when measurement conditions are carefully maintained. Relative measurements are often used as the basis for comparison between similar products and are valid when the measurement conditions are identical.

2.0 DEFINITIONS AND ACRONYMS

Carrier Level or Carrier Power

Often used as a synonym for “signal level” or “channel power”. When the carrier level is being modulated with information, the term “channel power” is more appropriate.

Channel Power or Channel Level

Documents Document Sharing Hub
Full document details: SCTE 96 2020

See definitions below for various types of signals. The level is usually presented in decibels with respect to one millivolt RMS in a 75 Ω system (dBmV).

Continuous Wave (CW) Carrier Level

The RMS voltage of the sinusoidal signal.

Analog Video Channel Level

The RMS voltage of the sinusoidal signal during the video sync pulse.

Digital Channel Level

The RMS voltage of a sinusoidal signal that would produce the same heating in a 75 Ω resistor as does the actual signal.

Intermittent Digital Channel Level

For a signal that occupies one assigned time slot in a time division multiple access (TDMA) sequence of time slots, the level reported shall be the equivalent level as if the signal being measured (any one of the multiple signals included in the total sequence) was on continuously.

dB

Decibels. Logarithmic expression of the ratio between two values

For two powers: $$x\ \text{dB} = 10 * \log\left(\frac{P_2}{P_1}\right) \quad (1)$$

For two voltages: $$x\ \text{dB} = 20 * \log\left(\frac{V_2}{V_1}\right) \quad (2)$$

dBc

Decibels relative to carrier power. Signals greater than the carrier will have a positive result; signals less than the carrier will have a negative result.

$$x\ \text{dBc} = \text{Disturbance Power (dB)} - \text{Carrier Power (dB)} = 10 * \log\left(\frac{P_{disturbance}}{P_{carrier}}\right) \quad (3)$$

-dBc (negative dBc)

To avoid using negative numbers, the ratio between a disturbance (smaller than the carrier) and the carrier is often specified as a positive number with the units -dBc.

dBm

Decibels relative to one milliwatt. 0 dBm equals 1 mW.

Documents Document Sharing Hub

Full document details: SCTE 96 2020

$$y\ \text{dBm} = 10 * \log\left(\frac{x\ \text{mW}}{1\ \text{mW}}\right) \tag{4}$$

where

x = the power in mW
y = the power in dBm

dBmV

Decibels relative to one millivolt RMS. 0 dBmV equals 1 mV.

$$y\ \text{dBmV} = 20 * \log\left(\frac{x\ \text{mV}}{1\ \text{mV}}\right) \tag{5}$$

where

x = the voltage in mV
y = the voltage in dBmV

dBμV

Decibels relative to one microvolt RMS. 0 dBμV equals 1 μV.

$$y\ \text{dB}\mu\text{B} = 20 * \log\left(\frac{x\ \mu\text{V}}{1\ \mu\text{V}}\right) \tag{6}$$

where

x = the voltage in μV
y = the voltage in dBμV

Unit Conversions

dBμV to dBmV

To convert from dBμV to dBmV, subtract 60 from the value:

$$y\ \text{dBmV} = x\ \text{dB}\mu\text{V} - 60 \tag{7}$$

dBmV to dBμV

To convert from dBmV to dBμV, add 60 to the value:

$$y\ \text{dB}\mu\text{V} = x\ \text{dBmV} + 60 \tag{8}$$

dBmV to dBm

Documents
Document Sharing Hub
Full document details: SCTE 96 2020

To convert from dBm to dBmV, the following equation can be used:

$$y\ \text{dBmV} = 20 * \log\left(1000 * \sqrt{\left[\frac{10^{\left(\frac{x\ \text{dBm}}{10}\right)}}{1000} * Z\right]}\right) \tag{9}$$

where

x = the power in dBm
y = the voltage in dBmV
Z = the impedance in ohms

To convert from dBmV to dBm, the following equation can be used:

$$y\ \text{dBm} = 10 * \log\left(1000 * \left[\frac{10^{\left(\frac{x\ \text{dBmV}}{20}\right)}}{1000}\right]^2 * \left[\frac{1}{Z}\right]\right) \tag{10}$$

where

x = the voltage in dBmV
y = the power in dBm
Z = the impedance in ohms

In a 75 Ω system:

0 dBm = 48.75 dBmV

In a 50 Ω system:

0 dBm = 46.99 dBmV

dBmV measurements of 75 Ω systems with 50 Ω equipment

The difference when changing between 50 and 75 Ω systems is 48.75 - 46.99 = 1.76 dB. If measurements of a 75 Ω system are made in dBmV on 50 Ω test equipment, the results will be 1.76 dB too low. To obtain the correct dBmV value for the 75 Ω system, the loss of the impedance matching system (generally a transformer or Minimum Loss Pad (MLP)) and the 1.76 dB correction factor must be added to the result. When a 5.7 dB MLP is used, this total correction factor is 7.46 dB.

Flatness

The maximum peak to valley excursion of the transmission response over the specified bandwidth.

Match

See Return Loss

Peak, Peak Level, Peak Carrier Level, Peak of the Carrier, or Peak Signal Level

Documents Document Sharing Hub
Full document details: SCTE 96 2020

”Peak” has two common uses:

1. The peak level of a signal or carrier is defined as the maximum voltage of that signal or carrier. Generally, a specific measurement period is defined, during which the maximum voltage is recorded. In some cases, only voltages that last for at least a pre-defined duration are recorded, with large voltage excursions of a shorter duration being ignored or limited by a narrow measurement bandwidth.
2. The more common usage of “peak” refers to the highest amplitude of a displayed signal on a spectrum analyzer. It is often necessary to position the spectrum analyzer marker on such a maximum value (generally with the “peak search” feature) to get a proper reading. In this case, the quantity to be measured is the maximum value of the RMS voltage and is not the peak voltage or peak power of a signal.

Unless specifically stated, “peak” will refer to the second definition. The quantity to be measured is the maximum value of the RMS voltage and is ***not*** the peak voltage or peak power of a signal. For more information on spectrum analyzer detectors used to make this type of measurement, see section 4.4.1.1.

Return Loss

Ratio between the level of a signal impinging on a port and the level of the signal reflected back from that same port.

Signal Level

Signal Level has two common uses:

1. Signal Level can be used to define the amplitude of a baseband signal. When used in this way, the term “signal” is reserved for references to baseband information, while carrier level or channel power is used for references to modulated RF carriers.
2. Signal Level can be used to define the level of modulated RF carriers.

To avoid confusion between these two definitions, the term “Signal Level” should be avoided. “Baseband Signal Level” should be used for baseband signals and “Channel Power” should be used for modulated RF carriers.

Slope

A measure of the monotonic frequency response of the network from low to high frequency. Slope is positive, or upward going, if the gain increases as the response is swept from low frequency to high frequency.

Tilt

The variation in level across the operating range of the network. Positive tilt is defined to occur if the signals at lower frequencies are lower in amplitude than those at higher frequencies.

Documents Document Sharing Hub
Full document details: SCTE 96 2020

3.0 TEST PLAN CONSIDERATIONS

Many factors must be considered in order to assure confidence that performance tests will provide valid and useable results. Care must be taken to insure that test results are not biased by pre-conceived notions of what is expected. The following are several factors to consider when establishing a test plan. These factors should be established for both the forward and return paths and both spectral components should be present simultaneously if actual operating conditions are to be analyzed.

3.1 Test Signal Source

The signal loading required for device or system evaluation must be determined as part of the test plan. Additionally, the same loading (or one that is at least substantially identical) must be used in all tests which are to be used for comparative purposes. Tests should be performed with a mixture of analog and digital signals that represent the anticipated operating conditions of the device. Though it is certainly possible, and in some cases useful, to test with a full loading of analog channels, there are meaningful arguments to be made for having a mixture of analog and digital channels so that one may optimize the set-up of a device for its intended use.

Some of the decisions to be made regarding the composition of the test spectrum (for both the forward and return path tests) are:

1. The number and frequency of the analog signals (channels)

    a. Will the traditional FM band be included (ie., EIA channels 95-97, etc.)?

    b. Will out-of-band data signals be included?

    c. The worst-case conditions for some parameters will differ with different signal loading.

2. The number, frequency and type of digital signals (channels)

    a. What assigned bandwidth, what data rates, what modulation protocol, what level relative to analog signal loading, etc.?

    b. How much guardband will be provided between channels (if any)?

One example of a test spectrum plan is presented below as an illustration of the process and necessary items.

Forward Signal Path; 54 to 1002 MHz

1. Full 498 MHz CW carrier loading in the forward path, with channels 95-97 (82 total channels per EIA 542 channelization plan)

Documents Document Sharing Hub

Full document details: SCTE 96 2020

2. 200 MHz of digital signal loading using 6 MHz wide 64 QAM or 256 QAM channels. As an alternative, reduced amplitude CW carriers at the frequencies of data channels may be used, but this is not the preferred method.

3. The digital signals will be tested at -6 dBc relative to the analog portion of the spectrum.

Return Signal Path; 5 to 42 MHz

1. 35 MHz of digital signal loading using 1.5 MHz wide QPSK channels

2. Actual comparative testing, for noise and distortion performance, may be conducted using 6 CW carriers within the pass band of 5 to 42 MHz.

Many different combinations of CW carriers, AM modulated signals, noise and actual digital signals are possible. As an alternative to discrete digitally modulated carriers, highly filtered broadband noise may be used. In this case, the spacing between channels must be defined in order to provide notches for measuring distortion products. When a digital signal is specified, the modulation type and occupied bandwidth must be included.

Other signal loading/spectrum schemes may be devised to ensure comprehensive testing of equipment capabilities. Full analog channel loading is useful to demonstrate the worst-case performance for composite distortions, but the addition of digital signals has added other impairments such as Carrier-to-Intermodulation Noise (CIN).

3.1.1 Test Signal Frequencies

Signal carrier frequencies used in broadband telecommunications systems in the US generally follow EIA Standard 542. This standard is based upon the traditional broadcast television frequency plan, which now incorporates the prescribed aeronautical offsets of ±12.5 kHz (or multiples thereof) for analog channels within specific portions of the transmitted spectrum. Although this frequency allocation plan represents “real life” conditions, it is not generally used for purposes of product qualification testing. The major reason for not using aeronautical offsets is economics and convenience. It would be quite expensive and troublesome to retune all of the existing fixed frequency signal generators in use today.

In addition to this, the original frequency plan with visual carriers placed 1.25 MHz above the lower channel band edge actually yields a more severe “worst case” distortion contribution than the newer requirements. With the aeronautical frequency offsets, the beats are bound within a larger spectral distribution pattern, given equal frequency stability requirements. Therefore, aeronautical offsets are not recommended for product qualification testing since this could alter the absolute levels of some distortion components. If aeronautical offsets

Documents Document Sharing Hub
Full document details: SCTE 96 2020

are used, the distortion measurement procedure must be modified to ensure that the entire distortion beat spectrum is included within the passband of the measurement device.

Another consideration when determining frequency assignments for testing is where to operate high frequency data channels. It might be desirable to set these carriers with a +1.25 MHz offset relative to the standard analog channel visual carrier frequency assignments in order to cause CTB distortions to accumulate between the data channels rather than within them. If such a plan is anticipated the test signal generator should be configured to test accordingly.

Distortion products caused by analog channel loading are fairly predictable and it should be possible to determine which channels will be most affected by a particular distortion parameter. Different distortions are likely to have their "worst case" effect on different channels. The "worst case" channel may change depending on the analog signal loading, the signal distribution (how many channels are used, channel bandwidth and frequency allocation) and the degree and type of tilt implemented.

Distortions caused by digital carriers should also be predictable based upon their modulation characteristics and spectral positions. Some low bandwidth data signals may actually act more like analog carriers. Other data signals may manifest a third order distortion which closely resembles noise (carrier-to-intermodulation noise, CIN) and is additive to thermal noise. Some of the distortion products caused by digital carriers will be transient in nature since the signals themselves are transient.

3.1.2 Operating Test Source Levels

After the composition of the test spectrum is determined, the operational conditions under which the device or system is to be loaded must be established. The fundamental levels and tilts of the signals, which are encountered in "real life", vary greatly. A house amp, for instance, encounters a wide range of input signal levels and tilt conditions based upon where it is located along the distribution line. The exact test conditions used must be determined with the understanding that every variable in test conditions requires an additional round of testing in order to acquire a complete picture of a device's performance.

As implied in the preceding paragraph, it is essential to determine the carrier levels used for testing. These levels must be established for the device's input and output to ensure that it is operating within its specified range. In some cases, as in line amplifiers and headend products, intermediate levels must also be established and maintained. Different sections of broadband communications plant will require different levels and ratios between forward and return signal levels. The "in-home" environment generally demands that return path signals be much higher in level than forward path signals. Equipment used in the in-home environment will normally not encounter as many simultaneous signals in

Documents
Document Sharing Hub
Full document details: SCTE 96 2020

the return path as the coaxial distribution plant. In addition to establishing the levels, the operational tilt at which a unit under test will operate must be determined. The tilt is often different for input, output and intermediate signal locations and the character of the tilt may be the inverse of the cable loss or linear.

In a complex spectrum, which contains both analog and digital signals, the digital signals must be set to a proper level relative to the adjacent analog carriers. This task is complicated when the digital signals vary in modulation scheme and bandwidth. To determine the "worst case" performance for a particular parameter, an alternative spectrum loading configuration may be required. If it is not apparent which spectrum load will provide a "worst case" scenario then a complete range of anticipated level and tilt conditions must be used to determine the potential for performance variations as a device is actually applied in the field.

3.2 Device Under Test (DUT) Configuration

Tests can be conducted for an individual device, a cascade of similar devices or a combination of different devices to represent much or all sections of a complete system from headend to in-home terminal.

If anything more than an individual unit is to be tested then the amount and nature of losses to be incorporated between the various components must be considered. Different plant sections also have different characteristics. The trunk portions of the plant generally have more cable loss and less passive loss than the distribution and the characteristics of those losses will not react the same to temperature variations.

Sufficient test points must be included to allow for absolute and relative measurements at every potential input and output, for both forward and return signal paths.

3.3 Environmental Requirements

3.3.1 Temperature Testing

1. It is recommended that all equipment should be tested over the full specified temperature range. For equipment used in outdoor plant, this should include soaking the instrument at an appropriate cold temperature (manufacturer's minimum operating temperature) with the power off and verifying that the DUT will start and operate normally.

2. Measurements should be taken at both extremes and at ambient as a minimum. Other temperatures may prove to be useful for analytical tasks (i.e., product development duties may suggest that measurements be made at 20° intervals in Celsius).

Documents Document Sharing Hub
Full document details: SCTE 96 2020

3. A "Temperature vs. Time" chart is recommended to track temperature variations as well as their timing and duration. Sufficient temperature probes should be used to track ambient temperature as well as the "core" temperature of any cable which is used. Placement of the cable's temperature probe(s) is especially critical for accurate tracking.

4. The stability of the cable's temperature, rather than ambient, should provide the trigger for each round of testing.

3.3.2 Additional Environmental Tests

The following is a list of additional environmental tests, which may be done if specified by the manufacturer. Detail on how to perform these environmental tests can be found in several reference specifications, including MIL spec PRF-28800.

1. Humidity – This test is typically done by verifying the performance of the DUT after soaking the DUT at an elevated temperature and humidity for an extended period of time.

2. Salt Spray Corrosion - Tests for performance in concentrations of salt spray or other corrosive elements are difficult and the user should refer to MIL specifications.

3. Water Resistance - Resistance to water may be measured using several different methods from drip to blowing rain to total submersion. Most test equipment intended for outdoor use is designed to withstand a blowing rain and should be tested using a controlled volume of water directed at the instrument from vertical ± 90°.

4. EMI and Susceptibility - These tests measure the level of radiated emissions from the instrument and the instrument's susceptibility to measurement errors caused by environments with high RF signal levels. The user should refer to IEC 801 specifications for the appropriate test procedures to be used.

3.3.3 Test Sample Considerations

1. Typically testing one DUT will verify if the device is within the manufacturer's published specifications. If the measurements results are very close to the published specifications, a larger sample may be required.

2. Devices tested should be from a random sampling of production released product, not early prototypes or lab samples.

Documents
Document Sharing Hub
Full document details: SCTE 96 2020

4.0 TEST EQUIPMENT

4.1 RF Power Meters

The power meter is the fundamental test instrument for measuring signal levels. It provides the highest degree of measurement accuracy and is most suitable as a standard against which other signal measurement devices can be calibrated. A power meter provides no frequency selectivity and therefore the user must isolate the carrier to be measured. Analog television signals, with their visual, aural and color carriers, cannot be measured properly because the power meter will measure the total power of all three carriers.

The power meter may be used as a standard reference for comparison with other signal level measurement devices. The difference in level measurement between the power meter and the frequency selective device may be used as a correction factor for future measurements. By making comparison measurements between the two devices across the entire frequency band of interest, a table of correction factors may be created. The two most common power sensing devices in use today are thermocouple sensors and diode detectors. Each method of measuring average power has some advantages and the preferred method is dependent upon the particular measurement situation.

1. Thermocouple Sensors

   Thermocouple sensors typically have better return loss and higher maximum input level. They are normally limited on the low-end to about +25 dBmV, but can easily measure to > +60 dBmV. Thermocouple sensors also measure true RMS power, even when measuring complex signals.

2. Diode Detector Sensors

   Diode detector sensors have the advantage of being able to measure lower level signals, typically to < 0 dBmV. The maximum input level to a diode sensor is typically about +25 dBmV, although higher-level sensors have recently become available. The response time of diode detector sensors is much quicker, so automated tests will operate faster. Older diode sensors may measure incorrectly with complex signals. It is also important to operate in the square law region of the sensor for best accuracy.

With the continuous improvement in power meter technology, the differences between measurement technologies are becoming smaller. For a thorough discussion of power meter fundamentals refer to Reference [6].

4.2 Signal Level Meters

A standard broadband communications signal level meter (SLM) is actually a frequency selective voltmeter. In its simplest form it combines an envelope amplitude detector circuit with a tuning circuit, a switchable attenuator and a display device. Modern high quality SLMs with digital readouts are actually very good

Documents Document Sharing Hub
Full document details: SCTE 96 2020

devices for setting amplitude modulated (AM) signals. Though not as accurate as the power meter they have historically been more accurate than the more complex spectrum analyzers, since they are designed for a very specific task.

4.3 Signal Analyzers

4.3.1 Spectrum Analyzers

A third type of signal amplitude measurement device is the spectrum analyzer. The spectrum analyzer is the most versatile device for measuring relative signal differentials, especially for those with a frequency offset from the reference carrier or signal. It provides a powerful visual display which allows for simultaneous viewing of a multitude of signals, both intentional and unintentional. Spectrum analyzers have been developed to a very high degree of usefulness, incorporating some very powerful features.

The spectrum analyzer is more flexible than the SLM or the power meter but historically has not been as accurate for measuring levels. However, the latest generation of digital spectrum analyzers have amplitude specifications similar to the best signal level meters.

Among the more useful features one should look for in a spectrum analyzer are:

1. Normalization or "zeroing" of certain functions in order to allow for accurate differential measurements.

2. Markers for absolute amplitude and frequency measurements and measurements relative to a user selectable reference.

3. Comprehensive self-test and self-calibration check.

4. Complete "on-screen display" of significant data points including equipment settings, levels, frequencies, etc. Additionally, the displayed information should be included in any printout or data storage schemes.

5. Standard data communications port for file transfer to printer, plotter or data storage device.

Some of the features, which are available for spectrum analyzers, may not be ideally suited for lab or bench test, although they are certainly appropriate for field use. A preamplifier is often required for better sensitivity. If an internal preamplifier is used, it is important to characterize it adequately in order to understand its impact on the measurement being made. If this characterization is not possible, an external amplifier is preferred.

Another area of caution when using an analyzer (or signal level meter) is the accuracy of the internal attenuator. Historically attenuators are generally only capable of 10 dB steps and it is difficult to determine the true attenuation of each

Documents Document Sharing Hub
Full document details: SCTE 96 2020

step. This becomes critical when attempting to make relative measurements. Newer analyzers do an excellent job of compensating accurately for the internal attenuator. A typical spectrum analyzer block diagram is shown in Figure 1.

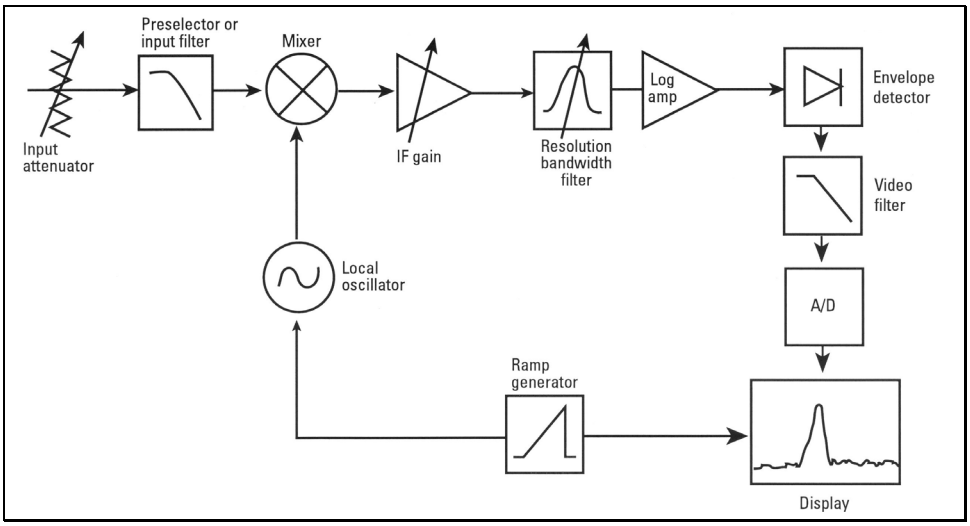

Figure 1 – RF Spectrum Analyzer Block Diagram

4.3.2 RF Receivers

An alternative solution to the RF spectrum analyzer is the RF Receiver. The RF Receiver typically provides more flexibility in the measurement configuration and allows higher dynamic range measurements, than typical Spectrum Analyzers. The RF receiver provides the frequency conversion to IF and demodulation of the signal along with additional measurement functionality. A typical RF Receiver block diagram is shown in Figure 2.

Error! Objects cannot be created from editing field codes.

Figure 2 – RF Receiver Block Diagram

The following section discusses differences between the RF Spectrum Analyzer and RF Receiver, including advantages and disadvantages.

RF Input Performance - Both block diagrams (Figures 1 and 2) indicate RF pre-selection before the 1st mixer which limits the power level present at the 1st mixer and minimizes distortion products generated within the receiver's front end. Pre-selection filtering is standard in most RF receivers, but has traditionally not been available in any but the most expensive spectrum analyzers. Many newer spectrum analyzers offer internal pre-selectors, but when using older analyzers, external pre-selection filters are required for best dynamic range.

RF Receivers also typically include a low noise preamplifier between the pre-selector and 1st mixer which establishes a lower noise figure for the RF front

Documents Document Sharing Hub
Full document details: SCTE 96 2020