SEMI A1-0521
SPECIFICATION FOR PRODUCTION EQUIPMENT SMART CONNECTION INTERFACE (PESCI)

This Standard was technically approved by the Automation Technology Global Technical Committee. This edition was approved for publication by the global Audits and Reviews Subcommittee on March 9, 2021. Available at www.semiviews.org and www.semi.org in May 2021; originally published as SEMI PV35 in 2012; previously published October 2020.

SUPERSEDED

Table of Contents

1 Purpose 2
2 Scope 2
3 Limitations 2
4 Referenced Standards and Documents 2
4.1 *SEMI Standards and Safety Guidelines* 2
5 Terminology 2
5.1 *Abbreviations and Acronyms* 2
5.2 *Definitions* 2
6 Convention 3
6.1 *Data Type Expression* 3
6.2 *State Diagram Format* 4
6.3 *State and Transition Table Format* 4
7 Conceptual Description 6
7.1 *Conceptual Description.* 6
7.2 *Intended Application* 6
7.3 *Line (A Connection Between Two Nodes)* 8
7.4 *Recursive Use of Line* 8
7.5 *Structure and Functions of This Standard* 9
7.6 *Line Connection Topology* 12
7.7 *Position of This Standard* 13
8 Basic Requirements 14
8.1 *Definition of Horizontal Communication (HC) and Vertical Communication (VC)* 14
8.2 *Informational Structure of Line* 15
8.3 *Data Model of Line Data* 16
8.4 *Message Protocol for General Data* 19
9 Data Handshake Requirements 28
9.1 *Data Handshake* 28
10 Material Handshake Requirements 35
10.1 *Material Handshake* 35
11 Media Mapping Requirements 83
11.1 *Mapping Rules of This Standard to Media* 83
12 Requirements for Compliance 84
Appendix 1 Track Type Specific Material Handshake State Models 86
Appendix 2 Examples of Mechanism Combination and Handoff Steps 90
Appendix 3 Use Cases of Step Function 93
Related Information 1 SEMI A1 Services and Events for User Application 99

Documents Document Sharing Hub
Full document details: SEMI A1-0521

1 Purpose

1.1 The purpose of this Standard is to provide a communication interface specification, to be used for the equipment control in flow shop type manufacturing line, that has the following capabilities.

- Simultaneous transfer of Material and its Material Data between adjacent equipment
- Transfer of general-purpose data between equipment
- Transfer of general-purpose data between the host and equipment

1.2 The purpose of this Standard is to provide a communication interface specification that can also be supported by cost effective controllers such as Programmable Logic Controller (PLC).

2 Scope

2.1 The scope of this Standard is to define communication interface specifications for equipment control in a flow shop type manufacturing line, which includes:

- A handoff interface that transfers a Material and its Material Data simultaneously between adjacent equipment
- A communication interface that transfers general-purpose data between equipment or between the host and equipment

NOTICE: SEMI Standards and Safety Guidelines do not purport to address all safety issues associated with their use. It is the responsibility of the users of the Documents to establish appropriate safety and health practices, and determine the applicability of regulatory or other limitations prior to use.

3 Limitations

3.1 This Standard may have some definitions for exception states, however, does not cover exceptions related to safety issues such as emergency off (EMO), so, those functionalities should be defined and implemented separately.

4 Referenced Standards and Documents

4.1 *SEMI Standards and Safety Guidelines*

SEMI A1.1 — Specification for TCP/IP Interface for Production Equipment Smart Connection Interface (PESCI)

SEMI A2 — Specification for Surface Mount Assembler Smart Hookup (SMASH)

NOTICE: Unless otherwise indicated, all documents cited shall be the latest published versions.

5 Terminology

5.1 *Abbreviations and Acronyms*

5.1.1 *DR* — data receiver

5.1.2 *DS* — data sender

5.1.3 *GD* — general data

5.1.4 *HC* — horizontal communication

5.1.5 *MD* — material data

5.1.6 *VC* — vertical communication

5.2 *Definitions*

5.2.1 *Alternate Port* — a Port that dynamically changes as Send Port or Receive Port.

5.2.2 *carrier* — a container that is used to transport one or more pieces of work-in-process at a time.

5.2.3 *Data Handshake* — a handshake that transfers General Data.

5.2.4 *eXchange Port* — a Port that works as one or both of Send Port and Receive Port in one transfer cycle.

SUPERSEDED

Documents
Document Sharing Hub
Full document details: SEMI A1-0521

5.2.5 *full duplex* — a communication scheme that has two independent transfer channels and has a capability to perform asynchronously simultaneous bi-directional communication.

5.2.6 *General Data (GD)* — general-purpose data that is used for the communication between equipment or between the host and equipment.

5.2.7 *handoff* — a physical action that transfers a Material between a pair of Ports.

5.2.8 *Handoff Step* — a unit operation that constitutes Material Handoff Handshake. The operation here does not necessarily involve physical motion, but also includes mechanical clearance sensing/confirmation etc.

5.2.9 *handshake* — a communication between communication entities associated with Line or Track that performs data transfer and/or Material Handoff.

5.2.10 *Horizontal Communication (HC)* — inter-equipment communication along with a physical flow line of work-in-process. Equipment here is equipment that handles work-in-process, such as process equipment, transfer equipment, metrology equipment, storage equipment, etc.

5.2.11 *Line* — a connection between two Nodes. One Line may have multiple Tracks.

5.2.12 *Line Data* — data that is handled by one Line connection.

5.2.13 *Logical Signal* — information that performs the handshake for Line connection.

5.2.14 *Material* — a work-in-process that is transferred as one unit at a time.

5.2.15 *Material Data (MD)* — data that belongs to an individual Material and describes the Material.

5.2.16 *Material Handoff* — a series of actions that transfers a Material between a pair of Port.

5.2.17 *Material Handoff Handshake* — a handshake that performs physical handoff of Material.

5.2.18 *Material Handshake* — a handshake that transfers Material and its Material Data.

5.2.19 *media* — communication means that perform communication between equipment.

5.2.20 *Mode Resolution* — a process in which an agreement is made on transfer mode and transfer direction between a pair of Ports in an autonomous manner.

5.2.21 *Mode Resolution Handshake* — a handshake that performs Mode Resolution.

5.2.22 *Node* — a communicational representation of the production line components such as the host or equipment.

5.2.23 *Originator* — a communication role that initiates a General Data message or a thread of General Data messages.

5.2.24 *Port* — a portion of equipment to send/receive a Material by Material Handshake.

5.2.25 *Propagator* — a communication role that relays a General Data message to the next adjacent equipment.

5.2.26 *Receive Port* — a Port that has a function of receiving in a Material.

5.2.27 *Responder* — a communication role that responds to a General Data message. A response may be an internal action and/or a sending back of a General Data message.

5.2.28 *Track* — a physical transfer path of Material in a Line. One Track has one Port at each end.

5.2.29 *Send Port* — a Port that has a function of sending out a Material.

5.2.30 *Vertical Communication (VC)* — communication between the host and equipment.

6 Convention

6.1 *Data Type Expression* — The following data type expression is used in this Standard.

Table 1 Data Type Expression

Type	*Definition*
BOOL	1-bit Boolean: TRUE (Signal On) = 1, FALSE (Signal Off) = 0

SUPERSEDED

Documents Document Sharing Hub
Full document details: SEMI A1-0521

Type	*Definition*
BYTE	8-bit binary data
WORD	16-bit binary data
CHAR	Single-byte ASCII character
STRUCT	Structured data
UINT8	8-bit unsigned integer
UINT16	16-bit unsigned integer
UINT32	32-bit unsigned integer

6.2 *State Diagram Format* — State diagrams used in this Standard may include Logical Signal names that represent each state as comments. Logical Signal names are shown in <> under the state names.

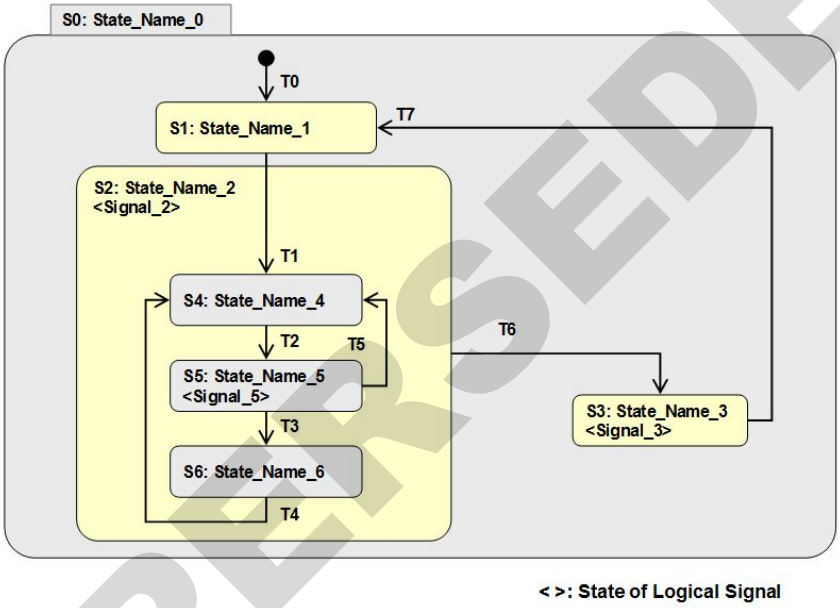

Figure 1
State Diagram

6.3 *State and Transition Table Format* — State and Transition Table used in this Standard has the following format. This table defines states and, also defines possible transition(s) from each state side by side. Each state has one or more transition(s). In case the transition comes from outside this table, the state definition column initiates the transition may be blank. Also, in case the transition comes from unspecified multiple states with the same condition, the state definition column may say '#Any state', and there may not be an explicit transition number.

6.3.1 *Definition of State* — Columns under State column define States with its No. (Number), Name and Definition. No. corresponds to the state number in the associated state diagram. Name defines a name of each state. Definition defines what the meaning of the state is and what to be done in the state.

6.3.2 *Definition of Transition* — Columns under Transition column define Transitions with its No. (Number), Trigger, Action, New State and Comments. No. corresponds to number put on a transition in associated state diagram. Trigger defines a condition to start the transition from current state to the next. Signal columns in Trigger column describe a combination of Logical Signal states to trigger the transition. Action defines thing(s) to be done during the transition. New State defines a state to move after the transition is completed, and points one of the states defined in the state definition in left side of the table. Comment may be used to put comments to each transition.

SUPERSEDED

Documents
Document Sharing Hub
Full document details: SEMI A1-0521

Table 2 State and Transition Table Format

State			*Transition*				
➔#5*[L3,L2,L1,L0]*#6 🡐#5*[L3,L2,L1,L0]*#6							
No.	*Name*	*Definition*	*No.*	*Trigger*	*Action*	*New State*	*Comments*
-#1	-#1	-#1	T0	Trigger condition for this transition such as System Power On.	Actions to be taken during this transition.	S0	Comments on this transition.
Sn#2	#Any state#2	-#2	-	Trigger condition for this transition.	Actions to be taken during this transition.	S3	Comments on this transition.
S0	State name 0	Description of this state. Actions taken during this state.	T1	The trigger condition for this transition is indicated by 'logical AND of internal conditions and incoming signals' as follows. Internal condition 0. Internal condition 1. ➔[L3,L2,L1,L0] Comment 0. Comment 1.	Actions to be done during this transition. 🡐[L3,L2,L1,L0] Signal0 on	S1	Comments on this transition.
S4#3	State name 1 🡐[L3,L2,L1,L0] Signal0 on Signal1 off	Transitions from this state are applicable to all its substates.	T2	Trigger condition for this transition. ➔[L3,L2,L1,L0] Signal0 on Signal1 off	Actions to be taken during this transition.	S0	Comments on this transition.
S1	Substate name 0 🡐[L3,L2,L1,L0] Signal0 on Signal2 on	Description of this state. Actions taken during this state.	T3	Trigger condition for this transition.	Actions to be taken during this transition.	S2	Comments on this transition.
			T4	Trigger condition for this transition.	Actions to be taken during this transition.	S3	Comments on this transition.
S2	Substate name 1 🡐[L3,L2,L1,L0]	Description of this state. Actions taken during this state.	T5#4	Common trigger condition for these transitions.	Actions to be taken during this transition. ➔Get Data n 🡐[L3,L2,L1,L0] Signal0 on	S0	Comments on this transition.
			(a)	Additional (Logical AND) trigger condition for this case.			
			(b)	Additional (Logical AND) trigger condition for this case.			
S3	State name 2	Description of this state. Actions taken during this state.	T6	Trigger condition for this transition.	Actions to be taken during this transition.	S0	Comments on this transition.

#1 In the case the transition comes from outside this table, the state definition column may be left blank.

#2 In the case the transition triggered by the same trigger condition comes from unspecified multiple states, the State No. column may use 'n' for its subscript and State Name column may be '#Any state'.

#3 A state that has substates.

#4 In the case one transition path has multiple cases of trigger conditions, common conditions are described in the main line, and additional conditions for each case are described in the line separated by dotted line and marked with (n).

#5 '➔' indicates that the Logical Signals are incoming signals, '🡐' indicates that the Logical Signals are outgoing signals. Single Logical signal or an integrated Logical Signal expression follows.

SUPERSEDED

Documents Document Sharing Hub
Full document details: SEMI A1-0521

#6 [L3,L2,L1,L0] is an integrated expression of Logical Signal states. State name or key Logical Signal names may follow.

#7 The following expressions are used for Logical Signal state.

i	Invalid.
p	Parent state determines the state.
s	Substates determine the state.
on	The signal is in active state.
off	The signal is in inactive state.
0	The signal is in off (or inactive) state.
1	The signal is in on (or active) state.
c	Conditional.
d	Don’t care upon check. The signal may take 0 or 1. Mainly used for check condition.
x	May take 0 or 1. Mainly used for state expression.
k	The signal keeps the same state with previous state to preserve the condition of the previous state.
n0	Trigger by not 0. Trigger occurs even if only this signal is 1.
n1	Trigger by not 1. Trigger occurs even if only this signal is 0.
name	Signal state name for a group of Logical Signals.

State			Transition				
No.	Name	Definition	No.	Trigger	Action	New State	Comment
-	-	-	T00			S00	
#A	-	-	T19			S10	
S00			T01			S13	
S10			T20			S00	
S13			T18			- (End)	
-	-	-	T02			S01	
S11			T07			S04	
S01			T03	Common	Common	S02	
			(a)	Case a	Act a		
			(b)	Case b	Act b		
			(c)	Case c			
S02			T04			S02	
			T05			S03	
S03			T06			S02	
S04			T08			S11 H1	
-	-	-	T09			S12 C1	
S12			T17			S00	
C1			T10			S05	
			T11			S06	
			T12			S07	
S05			T13			S08	
S06			T14				
S07			T15				
S08			T16			S08	

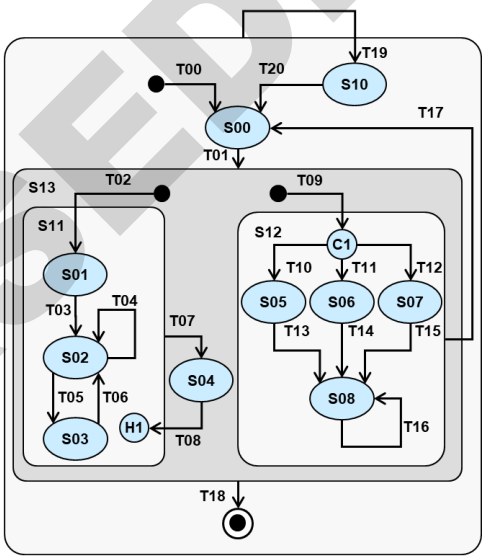

Figure 2
Example of State and Transition Table and its State Diagram

7 Conceptual Description

7.1 *Conceptual Description* — This section describes the concept of this Standard and includes no requirement.

7.2 *Intended Application* — This Standard is developed to provide the following control schemes for flow shop type manufacturing line.

7.2.1 *Intended Control Scheme of Manufacturing Line* — This Standard provides the control scheme that uses the following three interfaces.

- *Host-Equipment Communication Interface* — An interface by which the host performs manufacturing line setting and observation. The host sets up an equipment, and the equipment autonomously executes its process per the settings. The host observes the progress and traces the Material.

SUPERSEDED

Documents
Document Sharing Hub
Full document details: SEMI A1-0521

- *Inter-Equipment Communication Interface* — An interface that enables equipment to perform its process execution and line management (such as route management) autonomously by the inter-equipment communication of General Data (GD) through the equipment chain.
- *Object-Oriented Material Transfer Interface* — An interface that transfers 'Material and its Material Data (MD)' in the Object-Oriented way through the equipment chain. Upon an arrival of a Material, the equipment refers to the MD of the Material and executes its process according to the settings made by the host.

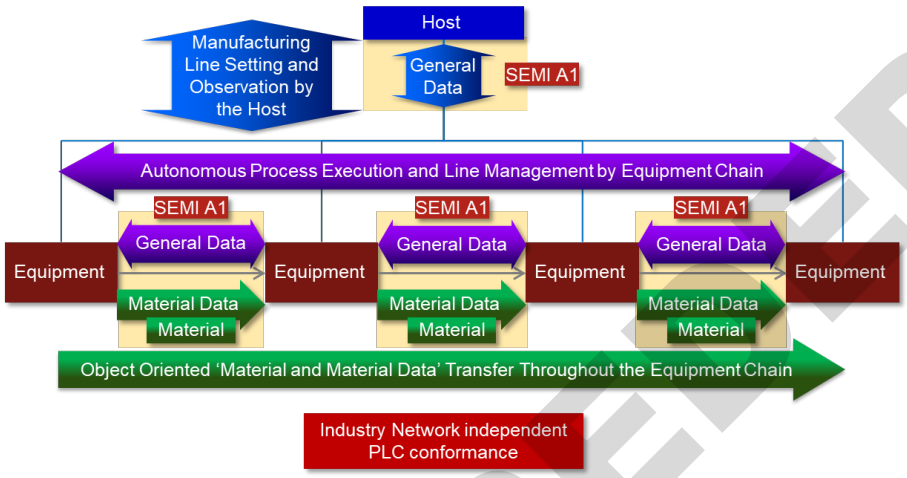

Figure 3
Intended Control Scheme of Manufacturing Line

7.2.2 *Intended Control Scheme of Equipment* — This Standard is developed to manage equipment in the following way.

- *Setup and Observe by the Host* — Equipment is set up by the host, then the equipment autonomously executes its process per the settings. The host observes the progress, may execute some exception handling, and logs the result for traceability and analysis.
- *Inter-Equipment Coordination* — Equipment coordinates its behavior each other via the equipment chain by using General Data (GD) communication. Equipment may autonomously control routes of Material etc.
- *Object-Oriented Material Transfer* — Equipment transfers a Material with its Material Data (MD) that normally contains individual ID, product ID, and process history of the Material. And the equipment in downstream of the line autonomously executes its process by referencing the Material Data in an Object-Oriented way.

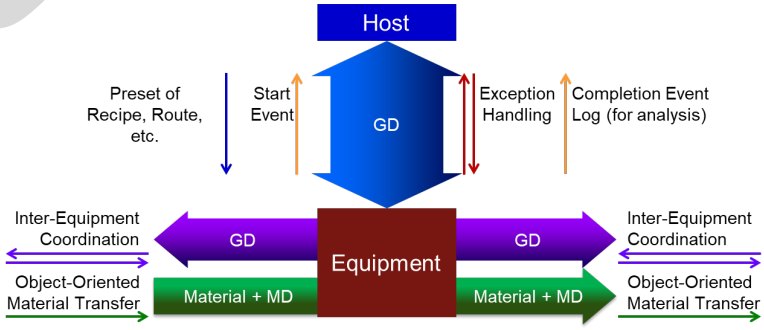

Figure 4
Intended Control Scheme of Equipment

SUPERSEDED

Documents Document Sharing Hub
Full document details: SEMI A1-0521

7.3 *Line (A Connection Between Two Nodes)* — This Standard calls the connection between any combination of two Nodes as Line. A Node is a communicational representation of the production line components such as:

- Equipment
- The host
- The upper tier host
- Workstation

7.3.1 *Recursive Use of Line* — Line may be recursively used between unit and unit in one equipment.

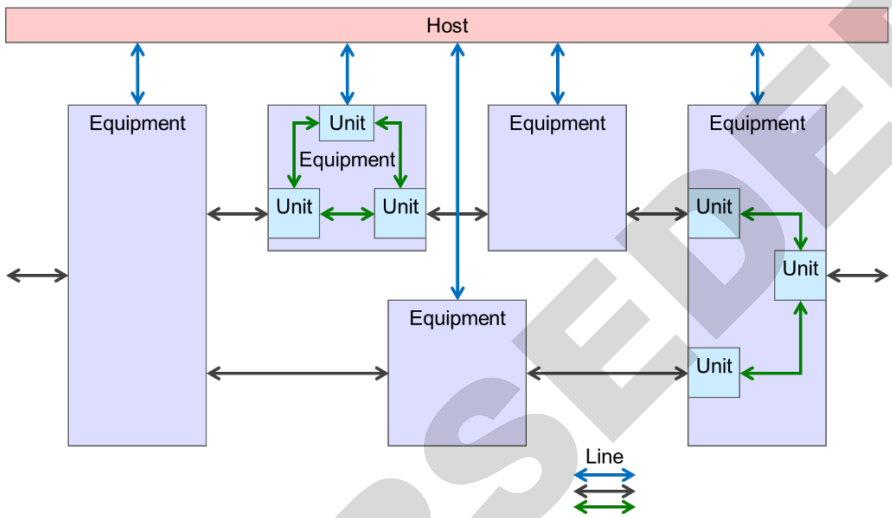

Figure 5
Line

7.3.2 *Manufacturing Line Topology* — This Standard may be used in a manufacturing line with a topology that includes:

- *Branch* — Branch from one Line to multiple Lines
- *Merge* — Merge multiple Lines into one Line
- *Turn Back* — Connect equipment by using one Line that has Tracks with direction change capability
- *Loop* — Loop back and merge

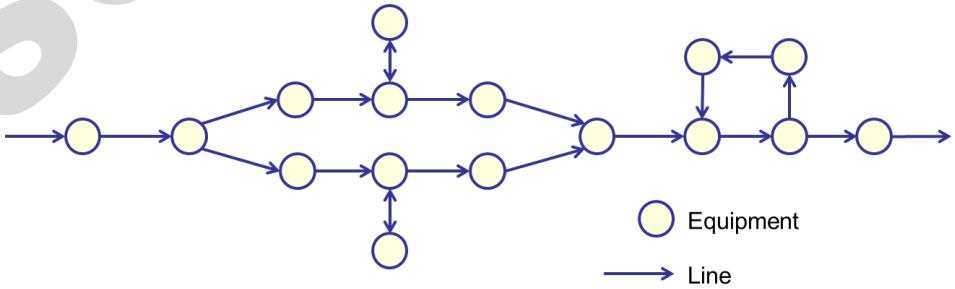

Figure 6
An Example of Manufacturing Line Topology

SUPERSEDED

Documents
Document Sharing Hub
Full document details: SEMI A1-0521

7.3.3 *Track* — A Line may have a physical transfer paths of Material between adjacent equipment that is called Track. A Line may have multiple Tracks.

7.3.4 *Structure of a Line* — A Line has one Line Information channel and may have multiple Track Information channels.

- *Line Information Channel* — A general purpose full duplex General Data (GD) communication channel that can be used for Horizontal Communication (HC) between equipment in the manufacturing line via the adjacent equipment or Vertical Communication (VC) between the host and equipment.
- *Track Information Channel* — A communication channel that controls a Track and transfers 'Material and its Material Data' concurrently between adjacent equipment. Multiple Track Information channels are operable independently and concurrently.

7.4 *Structure and Functions of This Standard* — This Standard consists of two main functions that support each of the following two types of channels used in a Line. These two functions are independent and can separately be implemented and used.

- *Line Information Channel (Data Handshake)* — A general purpose data communication channel that is defined as Data Handshake.
- *Track Information Channel (Material Handshake)* — A dedicated communication channel for simultaneous Material and Material Data transfer that is defined as Material Handshake.

7.4.1 *Line Information Channel* — The Line Information channel has the following features.

7.4.1.1 *Addressing Capability of General Data Communication* — To perform coordination among Nodes, General Data communication has the following addressing capability. The communication is fully duplex and interleaving capable.

7.4.1.2 *Addressing Capability for Star Connection* — To support star connection of Nodes, Line Information channel has the following addressing functions.

- *Between the Host and Upper Tier Host* — Communication between the host and the host in upper tier.
- *Between the Host and Equipment* — Communication between the host and equipment.
- *Between Equipment and Equipment* — Communication between equipment and equipment through the host.
- *Broadcast* — Broadcasting from or via the host. Responses may also be done per the message content.

SUPERSEDED

Documents Document Sharing Hub
Full document details: SEMI A1-0521

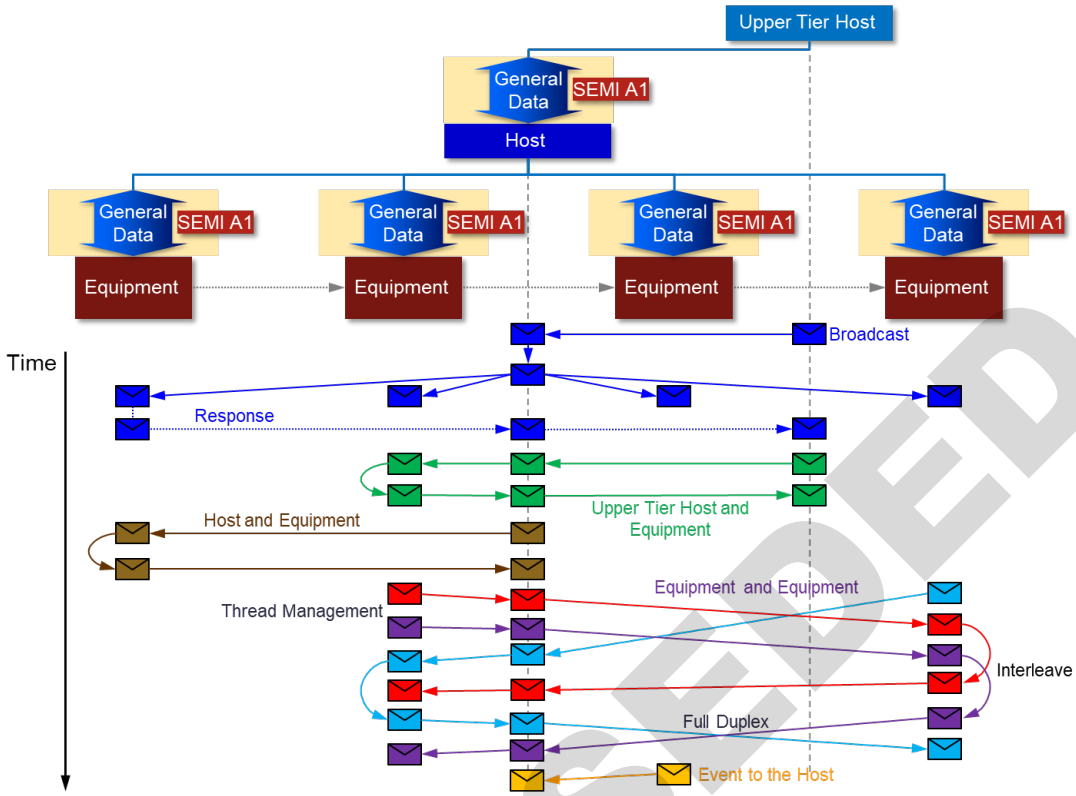

Figure 7
Addressing Capability of General Data Communication (Star Connection via the Host)

7.4.1.3 *Addressing Capability for Flow Connection* — To support flow connection of Nodes, Line Information channel has the following addressing functions.

- *Between Equipment and the Adjacent Equipment (or the Host)* — Communication between the adjacent Nodes without specifying the unique ID of the Node.
- *Between Specified Equipment and Equipment (or the Host)* — Communication between the specified Nodes via the adjacent Node.
- *Broadcast* — Broadcasting through the adjacent Node. Responses may also be done depending on the message content.

SUPERSEDED

Documents
Document Sharing Hub
Full document details: SEMI A1-0521

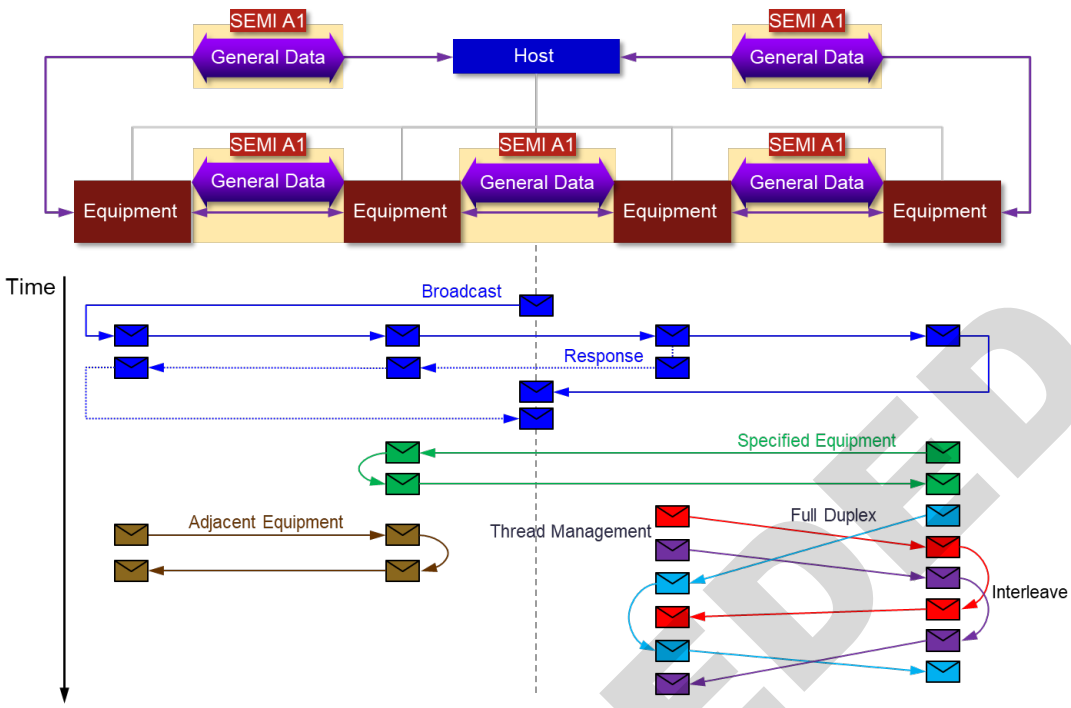

Figure 8
Addressing Capability of General Data Communication (Flow Connection)

7.4.2 *Track Information Channel* — The Track Information channel has the following features.

7.4.2.1 *Material Type* — Track Information channel handles a Material that can be dealt as one unit as exampled in the following figure. In the case the equipment has a capability to handle multiple Materials as a unit at a time, the unit of Materials are recursively dealt as one Material.

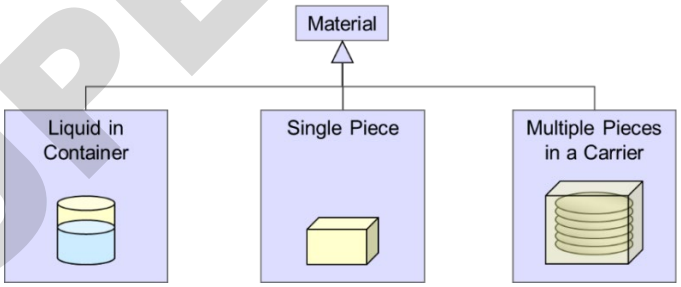

Figure 9
Examples of Material Type

7.4.2.2 *Track Type* — Track Information channel covers three Track Types: Uni-Direction, Alternate-Direction and Bi-Direction. One Line connection can manage multiple set and/or combination of them.

- *Uni-Direction* — A Track in which a Material flows in one direction from a Send Port of equipment A to a Receive Port of equipment B.
- *Alternate-Direction* — A Track that has a capability to change transfer direction dynamically, and in which a Material flows in the dynamically determined direction between Alternate Port (Send or Receive Port) of equipment A and Alternate Port of equipment B. Contention of transfer requests from both Ports is solved by Mode Resolution Handshake.

SUPERSEDED

Documents Document Sharing Hub
Full document details: SEMI A1-0521

- *Bi-Direction* — A Track that has a capability to swap Materials between eXchange (means Send and Receive) Port of equipment A and eXchange Port of equipment B in one transfer cycle with quasi-simultaneous manner. When only one Port has a transfer request (Material is available), the same operation as Uni-Direction is executed.

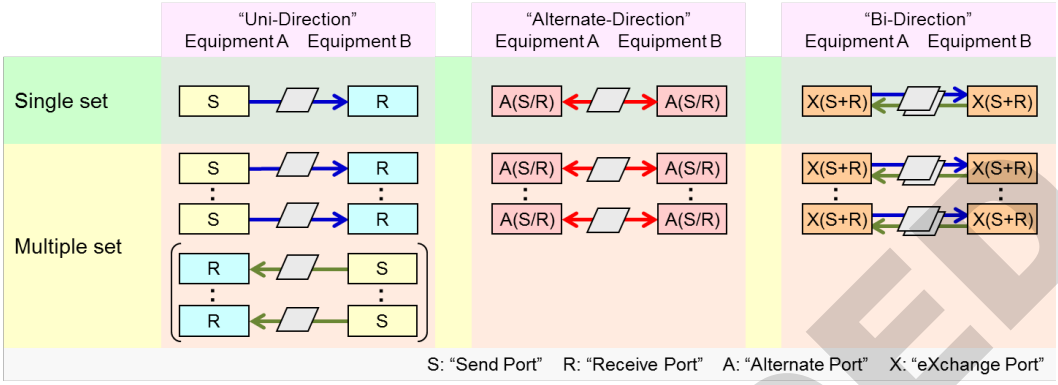

Figure 10
Track Types and Combinations

7.4.2.3 *Handoff Step Function* — Track Information channel provides a capability to perform multiple step of handoff to support:

- Complex hardware that requires many interactive motions between equipment.
- Step by step confirmation of the handoff state for more secure handoff.

7.4.2.4 *Pause and Restart Function* — Track Information channel provides the following functions to support exception handling during Material Handoff.

- *Pause* — When a handoff error occurs, the equipment that recognized the error stops the handoff motion, requests the other equipment to stop as well, asserts an error event, and calls for the operator assistance.
- *Restart* — After required actions and operator assistances, the equipment can restart handoff in one of the following ways.
  - *Retry* — Return the Material to the Send Port and restart handoff from the beginning.
  - *Resume* — Adjust the position of the Material and continue handoff from the state the exception occurred.
  - *Forward* — Forward the Material to the Receive Port and restart handoff from the completion state.
  - *Abort* — Remove the Material from the Track and abort the handoff.

7.5 *Line Connection Topology* — This Standard supports the following connection topology of Line.

7.5.1 *Star Connection* — A connection of Nodes that is typically used for the communication between equipment and the host (and host in upper tier such as the factory host that maintains multiple production lines) as one address space for production line management.

- *Data Handshake Only* — Only the Data Handshake of the Line is used. Material Handshake is not required.

7.5.2 *Flow Connection* — A connection of Nodes that is typically used for the communication between equipment and equipment along the production flow.

- *Host Connection* — For the very first equipment in the line, the flow connection is typically from the host. Similarly, for the last equipment in the line, the flow connection is typically to the host.
- *Data Handshake and Material Handshake* — Both Data Handshake and Material Handshake are required. The Material Handshake between the host and equipment does not handoff actual Material but Material Data only.

SUPERSEDED

Documents
Document Sharing Hub
Full document details: SEMI A1-0521

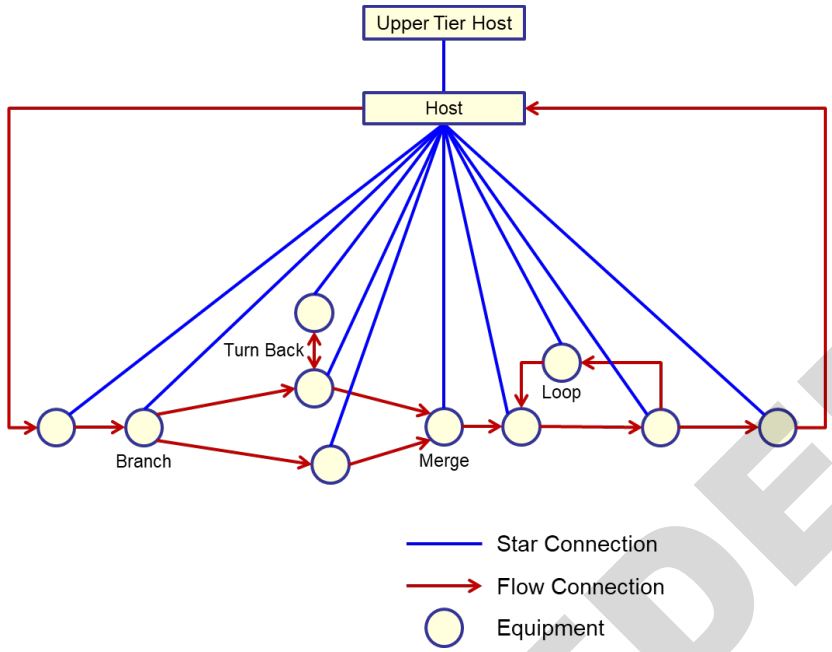

Figure 11
Line Connection Topology

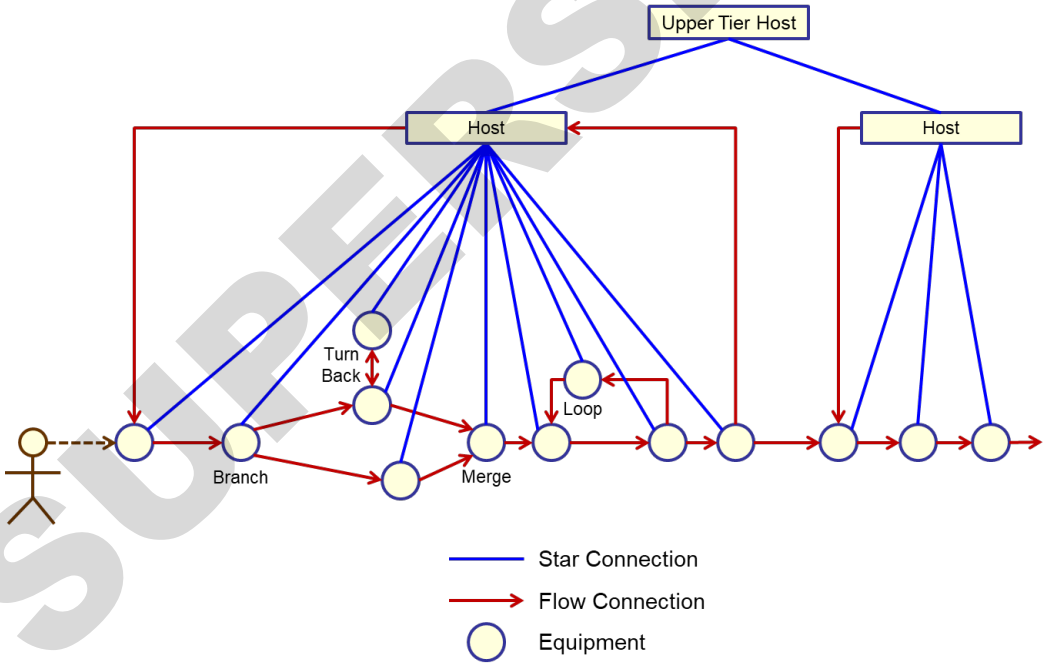

Figure 12
A Use Case of Line Connection Topology

7.6 *Position of This Standard* — This following figure shows the position of this Standard.

- *Application Tier* — This Standard does not define the actual data, messages, and scenarios for a specific manufacturing line. Application-specific Subordinate Standards need to be developed to define them.

SUPERSEDED
Documents Document Sharing Hub
Full document details: SEMI A1-0521

- *SEMI A1 Tier* — SEMI A1 covers the following specifications.
  - *Information Structure* — Information structure of Line, General Data format, Material Data format, and GD message protocol.
  - *Handshakes* — Logical Signal, Data Handshake for GD, and Material Handshake for 'Material and MD'(that consists of Mode Resolution Handshake and Material Handoff Handshake).
  - *Media Mapping Rules* — Layout of Logical Signals.
- *Media Interface Tier* — Normally, SEMI A1.1 that interfaces to TCP/IP is used, but not limited to. Subordinate Standards for other media may also be developed.
- *Media Tier* — Normally, TCP/IP is used, but not limited to. Other media can also be used by developing a Subordinate Standard for media interface tier.

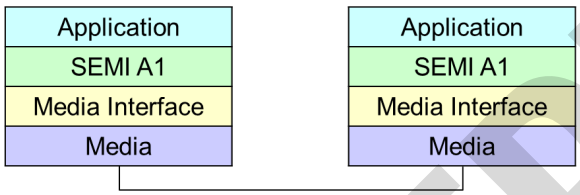

Figure 13
Position of This Standard

8 Basic Requirements

8.1 *Definition of Horizontal Communication (HC) and Vertical Communication (VC)* — This section defines the position and function of HC and VC in a factory system.

8.1.1 *Definition of HC* — HC is a communication between equipment that handles Material in process. And, equipment here is equipment that handles Material such as process equipment, transfer equipment, metrology equipment, buffer equipment and cluster of them. HC performs communication between equipment to transfer Material with its Material Data in well linked manner to provide better traceability. HC also performs communication between equipment to transfer General Data.

8.1.2 *Definition of VC* — VC is a communication between the host and equipment. General Data transfer part of this Standard may be used for VC.

SUPERSEDED

Documents
Document Sharing Hub
Full document details: SEMI A1-0521

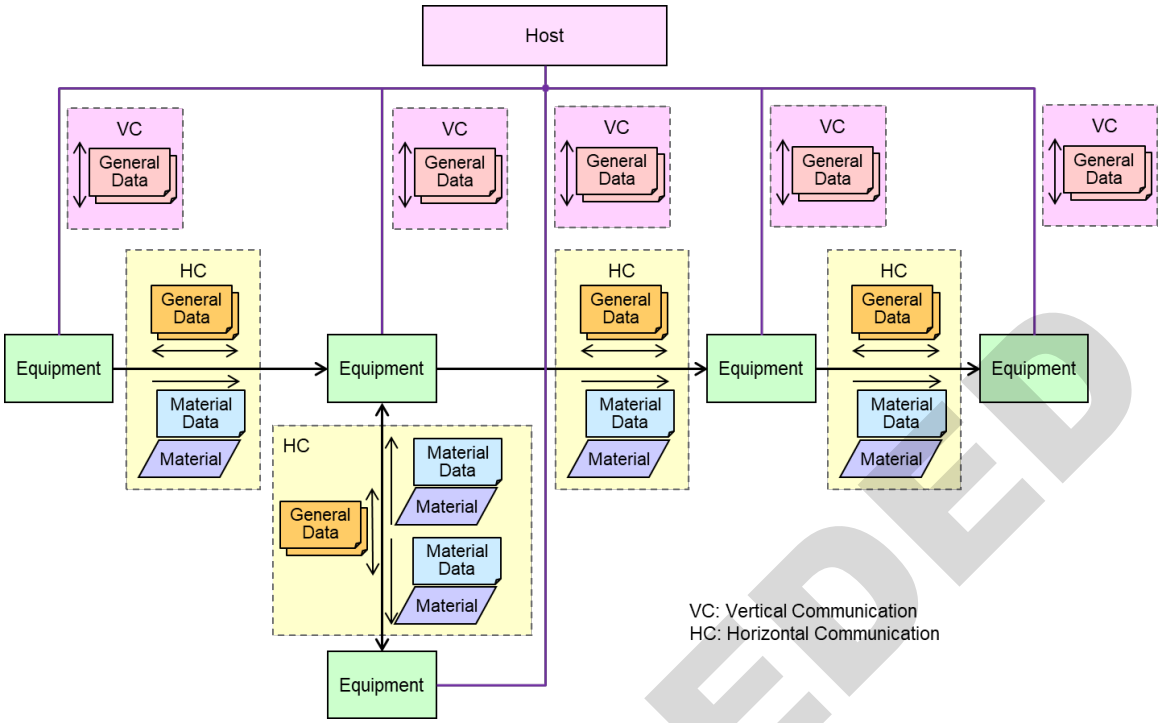

Figure 14
Position of HC and VC

8.2 *Informational Structure of Line* — This section defines an informational structure of Line. One Line consists of one Line Information channel and the same number of Track Information channels with the number of Tracks the Line has. Note that Track Information channel is not required for VC application.

8.2.1 *Line Information* — Line Information has a capability to transfer General Data in fully duplex mode. Line Information consists of two separate General Data communication channels that are reverse in directions.

8.2.1.1 *Data Handshake Signals* — Data Handshake signals perform handshake to transfer General Data.

8.2.1.2 *General Data* — Information for inter-equipment or the host and equipment communication. This Standard only defines the format of General Data, and the content of General Data is application defined.

8.2.2 *Track Information* — Track Information consists of following informational components.

8.2.2.1 *Material Handshake Signals* — Material Handshake signals perform handshake to transfer both Material Data and Material between Ports located at the both end of each Track.

8.2.2.2 *Material Data* — Material Data is a set of data associated with the Material to be transferred. Material Data may have a dedicated format for a specific type of Material as defined after. Track Information shall have one or two Material Data according to the Material transfer direction of the Track. Send MD or Receive MD for uni-directional cases, both Send MD and Receive MD for bi-directional cases (see Data Model of Line Data). Material Data shall be transferred simultaneously with the Material.

SUPERSEDED

Documents Document Sharing Hub
Full document details: SEMI A1-0521

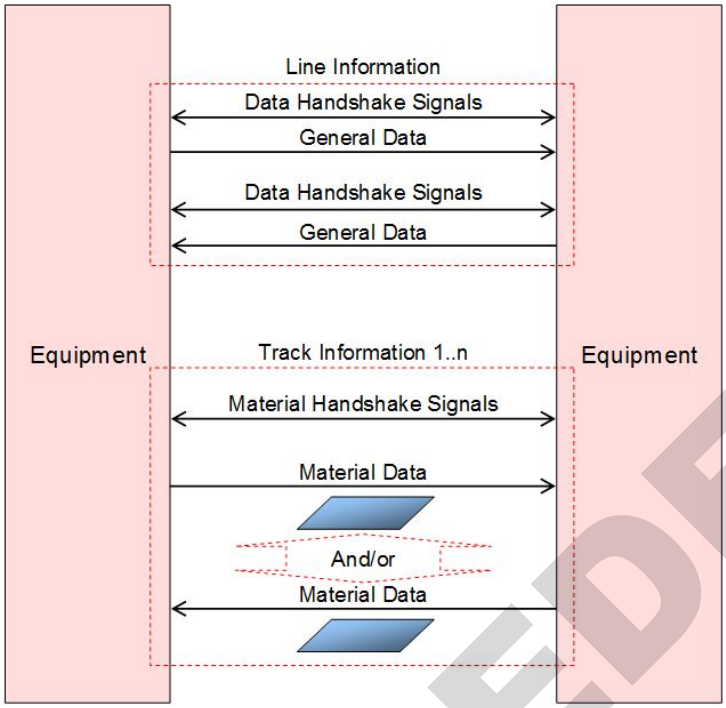

Figure 15
Structure of Line Between Equipment

8.3 *Data Model of Line Data* — This section defines a Data Model of Line Data.

8.3.1 *Data Structure* — This section defines a structure of Line Data. Line Data consists of one set of General Data and one or more Material Data. Note that Material Data is not used in VC application.

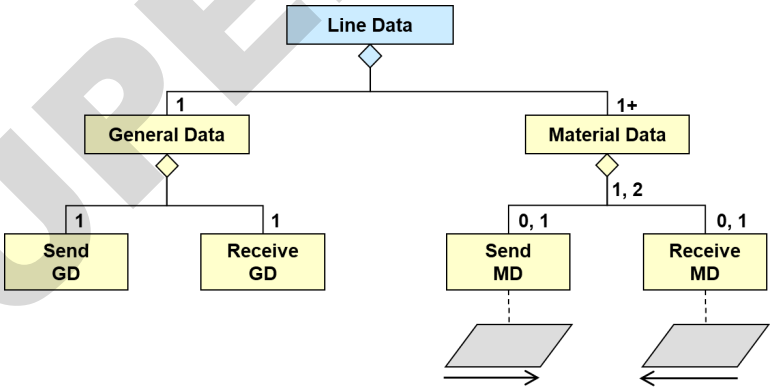

Figure 16
Data Model of Line Data

SUPERSEDED

Documents
Document Sharing Hub
Full document details: SEMI A1-0521

8.3.2 *Data Definition* — This section defines format and reserved functions of General Data and Material Data.

8.3.2.1 *General Data Format* — General Data shall have the following format.

Table 3 General Data Format (G_DATA)

Field	*Mnemonic*	*Byte Order*	*Type*[#2]	*Definition*[#1]
General Data Header				Header of General Data message
GD Header Revision	GD_H_REV	0	UINT8	To be incremented when header definition is revised. Set to 0x02
(Reserved)	(Reserved)	1	BYTE	Reserved for future use. Set to 0x00
Addressing ID				Identifiers that manage addressing of the message in a thread-oriented manner. See 'Addressing ID' section for detail.
Originator ID	ORIG_ID	2 (MSB) 3 (LSB)	WORD	Identifier of the Originator of the message thread.
Responder ID	RESP_ID	4 (MSB) 5 (LSB)	WORD	Identifier of the Responder of the message thread.
Message Control ID	MC_ID			Identifiers that manage message threads and interleaving. See 'Message Control ID' section for detail.
Thread ID	THREAD_ID	6 (MSB) 7 (LSB)	WORD	An identifier that contains thread control information.
Block ID	BLOCK_ID	8 (MSB) 9 (LSB)	WORD	Identifier of message block to be used for message block/deblock of large message. Start with the number of blocks minus 1 and decrement by 1. 0x0000 means the message block is the last block of the message.
Path ID	PATH_ID	10	BYTE	An identifier that contains path control information.
(Reserved)	(Reserved)	11	BYTE	Reserved for future use. Set to 0x00
Time Stamp	TIME_STAMP	12 ~ 21	STRUCT	The time when General Data is sent. Note that TIME_STAMP is for communication management purpose. Time stamp for GD contents should be included in GD_BODY per user definition.
General Data Body Length	GD_BODY_ LENGTH	22 (MSB) 23 24 25 (LSB)	UINT32	Length of GD_BODY Maximum length may also be limited by Media Interface tier.
General Data Body	GD_BODY			Body of General Data message
General Data ID	GD_ID			GD_ID is an identifier of General Data and represents its function.
GD ID Revision	GD_ID_REV	26	UINT8	To be incremented when GD_ID definition is revised. Set to 0x00
Application Code	AC	27	UINT8	Code for application identification. See the table 'Application Code Assignment'.
Category Code	CC	28	UINT8	Code for a group of messages that perform the same area of operation.
Function Code	FC	29	UINT8	Code for each message
General Data Content	GD_CONTENT	30 ~	STRUCT	User defined GD content.

#1 The prefix 0x indicates that the number is written in hexadecimal notation.

#2 See 'Data Type Expression' section in Convention for 'Type' expression

SUPERSEDED

Documents Document Sharing Hub

Full document details: SEMI A1-0521

Table 4 Application Code Assignment

Application Code AC[#1]	*Assignment*	*Note*
0x00 to 0x0F	Reserved for SEMI A1.	
0x10 to 0x13	Used by SEMI A2 — Specification for Surface Mount Assembler Smart Hookup (SMASH).	
0x14 to 0x7F	Reserved for future SEMI Standards.	
0x10 to 0xFF	Open for users.	

#1 The prefix 0x indicates that the number is written in hexadecimal notation.

8.3.2.2 *Material Data Format* — Material Data shall have the following format.

Table 5 Material Data Format (M_DATA)

Field	*Mnemonic*	*Byte Order*	*Type*[#2]	*Definition*[#1]
Material Data Header				Header of Material Data
MD Header Revision	MD_H_REV	0	UINT8	To be incremented when header definition is revised. Set to 0x00
(Reserved)	(Reserved)	1	BYTE	Reserved for future use. Set to 0x00
(Reserved)	(Reserved)	2	BYTE	Reserved for future use. Set to 0x00
(Reserved)	(Reserved)	3	BYTE	Reserved for future use. Set to 0x00
Time Stamp	TIME_STAMP	4 ~ 13	STRUCT	The time when Material Data is sent. Note that TIME_STAMP is for communication management purpose. Time stamp for MD contents should be included in MD_BODY per user definition.
Material Data Body Length	MD_BODY_ LENGTH	14 (MSB) 15 16 17 (LSB)	UINT32	Length of MD_BODY Maximum length may also be limited by Media Interface tier.
Material Data Body	MD_BODY			Body of Material Data
(Reserved)	(Reserved)	18	BYTE	Reserved for future use. Set to 0x00
(Reserved)	(Reserved)	19	BYTE	Reserved for future use. Set to 0x00
Material Data Content	MD_CONTENT	20 ~	STRUCT	User defined Material Data content. Recommended to have the following information. ➢ MD length ➢ Individual ID and related information ➢ Product ID and related information ➢ Process logs at each equipment

#1 The prefix 0x indicates that the number is written in hexadecimal notation.

#2 See 'Data Type Expression' section in Convention for 'Type' expression.

SUPERSEDED

Documents
Document Sharing Hub
Full document details: SEMI A1-0521

8.3.2.3 *Time Stamp Format* — Time Stamp used for TIME_STAMP shall have the following format.

Table 6 Time Stamp Format

Field	*Mnemonic*	*Byte Order*	*Type*[#2]	*Definition*[#1]
Time Stamp	TIME_STAMP	0 (MSB)	UINT16	Binary expression for four-digit year 'YYYY'
		1 (LSB)		
		2	UINT8	01=January through 12=December for two-digit month 'MM'
		3	UINT8	01 through 31 for two-digit day of month 'DD'
		4	UINT8	Set to 0
		5	UINT8	00 through 23 for two digits of hour 'hh'
		6	UINT8	00 through 59 for two digits of minute 'mm'
		7	UINT8	00 through 59 for two digits of second 'ss'
		8 (MSB)	UINT16	000 through 999 for three digits of millisecond 'ttt'
		9 (LSB)		

#1 Decimal expression is used to define a range of unsigned integer.

#2 See 'Data Type Expression' section in Convention for 'Type' expression.

8.4 *Message Protocol for General Data* — This section defines Message Protocol for General Data messages. This Standard supports Full Duplex operation of a General Data message or a thread of General Data messages that work as Services (mainly, upper tier Node to lower tier Node, or upstream Node to downstream Node), Responses (to a Service), and Events (mainly, lower tier Node to upper tier Node, or downstream Node to upstream Node). Also, this Standard supports an interleave operation of multiple General Data message threads.

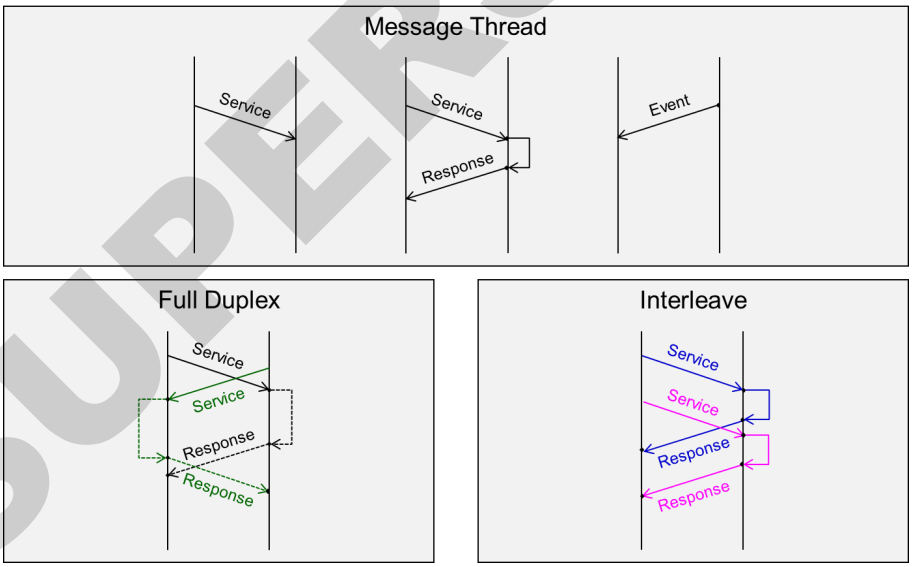

Figure 17
Support for Message Protocol

8.4.1 *Addressing ID* — Three communication roles—Originator, Responder, and Propagator—are defined to support various addressing modes of a message thread through the adjacent Nodes. Node ID is used for Originator ID or Responder ID.

- *Message Thread Oriented Addressing ID* — Addressing ID that consists of Originator ID and Responder ID is used to specify the Originator and the Responder of the message thread.

SUPERSEDED
Documents Document Sharing Hub
Full document details: SEMI A1-0521

- *A Response of a Responder* — A response of a Responder may be an internal action and/or a sending back of a General Data message.
- *A Propagator and a Responder* — A Node may play roles of Responder and Propagator at the same time.

8.4.1.1 *Node ID (Equipment ID)* — Node ID is a unique identifier of a Node. Node ID is used for Originator ID or Responder ID to uniquely specify Originator or Responder. Node ID has the following structure. The value of Node ID is user determined. Equipment may use the term Equipment ID instead of Node ID.

Table 7 Node ID Format

Field	*Mnemonic*	*Byte Order*	*Type*[#2]	*Definition*[#1]
Node ID	NODE_ID			Unique identifier of the Node.
Group ID	-	0 (MSB)	WORD	Unique identifier of the group of Nodes. ➢ To group Nodes and perform communication between Nodes in different groups, Group ID other than 0x00 shall uniquely be assigned and used. 0x00: Group ID is not uniquely set to the Node or specified in the message thread. Uniqueness of message thread shall be managed per Line. 0xFF: Reserved for future use.
Intra-group ID	-	1 (LSB)		Identifier of the Node that is unique under the Group ID. ➢ To perform communication between Nodes that are not adjacent, Intra-group ID other than 0x00 shall uniquely be assigned and used. 0x00: Intra-group ID is not uniquely set to the Node or specified in the message thread. Uniqueness of message thread shall be managed per Line. 0x01 to 0xFC: Equipment Node 0xFD to 0xFE: Host Nodes. (0xFD for Upper Tier Host) 0xFF: Any Node. To be used for Responder ID to indicate the message is Broadcast message.

#1 The prefix 0x indicates that the number is written in hexadecimal notation.

#2 See 'Data Type Expression' section in Convention for 'Type' expression.

Table 8 Addressing of Node ID

Group ID[#1] / *Intra-group ID*[#1]		*0x00*	*0x01 to 0xFE*	*0xFF*
		Group Not Specified (Own Group)	*Specified Group*	-
0x00	*Node Not Specified*	➢ Adjacent Node in the own Group.	➢ Adjacent Node in the specified Group.	➢ Reserved for future use
0x01 to 0xFC	*Specified Equipment Node*	➢ Specified Node in the own Group.	➢ Specified Node in the specified Group.	➢ Reserved for future use
0xFD to 0xFE	*Specified Host Node*	➢ The host in the own Group.	➢ The host in the specified Group.	➢ Reserved for future use
0xFF	*All Nodes (Broadcast)*	➢ All Nodes in the own Group.	➢ All Nodes in the specified Group.	➢ Reserved for future use

#1 The prefix 0x indicates that the number is written in hexadecimal notation.

SUPERSEDED

Documents
Document Sharing Hub
Full document details: SEMI A1-0521

8.4.1.2 *Originator ID* — Originator ID shows which Node originated the message thread.

Table 9 Definition of Originator ID (ORIG_ID)

ORIG_ID[#1]	*Originator*	*Definition*	*Note*
0x<gg>00	Any Node	➢ Indicate that the message thread is to an adjacent Node, originated by any Node ➢ Cannot be used for broadcast	➢ Unique Node ID of the Originator is not required.
0x<gg>01 to 0x<gg>FC	Specified Equipment Node	➢ Indicate that the message thread is originated by the specified Node ➢ Can be used for broadcast	➢ Unique Node ID of the Originator is required.
0x<gg>FD to 0x<gg>FE	Specified Host Node		
0x<gg>FF	Not used	-	➢ This value is used only as Responder ID for broadcast

#1 The prefix 0x indicates that the number is written in hexadecimal notation. <gg> is the hexadecimal representation of the Group ID.

8.4.1.3 *Responder ID* — Responder ID shows which Node shall be the Responder of the message thread.

- *Determination of Responder ID* — Responder ID is determined by the Originator upon the origination of the message thread. The Responder ID is overwritten with the own Node ID of the Responder only in the case the Responder needs to respond to the broadcast message.

Table 10 Definition of Responder ID (RESP_ID)

RESP_ID[#1]	*Responder*	*Definition*[#1]	*Note*
0x<gg>00	The Node Adjacent to the Originator Node	➢ Indicate that the message thread is to the adjacent Node of the Node that originated the message thread ➢ No message propagation allowed (A message thread only between adjacent Nodes) ➢ The Node that received the message shall become the Responder.	➢ Unique Node ID of Responder is not specified. ➢ Used for the case Node ID of the adjacent Node is unknown or not uniquely set ➢ Assignment of unique Node ID is not required to communicate with the adjacent Node.
0x<gg>01 to 0x<gg>FC	Specified Non-Host Node	➢ Indicate that the message thread is to the specified Node. ➢ Used for the case the ID of the Responder is determined when the message thread is originated. ➢ The Node whose Node ID is equal to the Responder ID shall become the Responder.	➢ Unique Node ID of Responder is specified. ➢ Used for the communication with the Node with specified Node ID ➢ Assignment of unique Node ID to the Responder is required. ➢ The message may request a response conditionally or unconditionally.
0x<gg>FD to 0x<gg>FE	Specified Host Node		
0x<gg>FF	All Nodes (Broadcast)	➢ Indicate that the message thread is a broadcast message thread to the Nodes that have the specified Group ID (0x<gg>). ➢ All Nodes in the message propagation path shall check the content of the message. ➢ The Node that is requested to respond to the broadcast message by the definition of the message shall become a Responder and shall respond to the message with a Responder ID overwritten by the own Node ID.	➢ Broadcast message may request responses conditionally or unconditionally.

#1 The prefix 0x indicates that the number is written in hexadecimal notation. <gg> is the hexadecimal representation of the Group ID.

SUPERSEDED

Documents Document Sharing Hub
Full document details: SEMI A1-0521

8.4.1.4 *Originator Responder Combinations* — The following table shows Originator-Responder combinations.

Table 11 Combinations of Originator ID and Responder ID

Originator ID[#1] / *Responder ID*[#1]		*0x<gg>00*	*0x<gg>01 to 0x<gg>FC*	*0x<gg>FD to 0x<gg>FE*	*0x<gg>FF*
		Any Node	*Specified Equipment Node*	*Specified Host Node*	*All Nodes*
0x<gg>00	*The Node Adjacent to the Originator Node*	➢ A message thread between the adjacent Nodes ➢ No message propagation allowed	➢ A message thread between the adjacent Nodes ➢ No message propagation allowed	➢ A message thread from the host Node to the adjacent Node ➢ No message propagation allowed	➢ Not used
0x<gg>01 to 0x<gg>FC	*Specified Equipment Node*	➢ A message thread between the adjacent Nodes ➢ No message propagation allowed	➢ A message thread between the specified Nodes (Not limited to between adjacent Nodes) ➢ Message propagation may be required	➢ A message thread from the host Node to the specified Node (Not limited to between adjacent Nodes) ➢ Message propagation may be required	➢ Not used
0x<gg>FD to 0x<gg>FE	*Specified Host Node*	➢ A message thread from the Node to the adjacent host Node ➢ No message propagation allowed	➢ A message thread from the specified Node to the host Node (Not limited to between adjacent Nodes) ➢ Message propagation may be required	➢ A message thread from a host Node to another host Node (Not limited to between adjacent Nodes) ➢ Message propagation may be required	➢ Not used
0x<gg>FF	*All Nodes (Broadcast)*	➢ Not used	➢ Broadcast message thread from the specified Node ➢ Message propagation required	➢ Broadcast message thread from the host Node ➢ Message propagation may be required	➢ Not used

#1 The prefix 0x indicates that the number is written in hexadecimal notation. <gg> is the hexadecimal representation of the Group ID.

SUPERSEDED

Documents
Document Sharing Hub
Full document details: SEMI A1-0521

Table 12 Examples of Addressing ID Assignment

Message Thread		*Addressing ID*[#1]		*Applicable To*[#2]		*Note*
Originator	*Responder*	*ORIG_ID*	*RESP_ID*	*Star*	*Flow*	
Upper Tier Host	Host	0x<gg>FD	0x<gg>FE	A	N	
Upper Tier Host	Specified Equipment	0x<gg>FD	0x<gg><ii>	A	N	
Upper Tier Host	Broadcast	0x<gg>FD	0x<gg>FF	A	N	
	Host		0x<gg>FE	A	N	➢ A response from the Host.
	Equipment		0x<gg><ii>	A	N	➢ A response from Equipment.
Host	Upper Tier Host	0x<gg>FE	0x<gg>FD	A	N	
Host	Specified Equipment	0x<gg>FE	0x<gg><ii>	A	A	
Host	Adjacent Equipment	0x<gg>FE	0x0000	A	A	
		0x0000	0x0000	A	A	
Host	Broadcast	0x<gg>FE	0x<gg>FF	N	A	
	Equipment		0x<gg><ii>	N	A	➢ A response from Equipment.
Equipment	Upper Tier Host	0x<gg><ii>	0x<gg>FD			
		0x00<ii>	0x00FD			
Equipment	Host	0x<gg><ii>	0x<gg>FE	A	A	
		0x0000	0x00FE	A	N	
		0x0000	0x0000	A	N	
Equipment	Specified Equipment	0x<gg><ii>	0x<gg><ii>	A	A	
Equipment	Adjacent Equipment	0x0000	0x0000	N	A	
Equipment	Broadcast	0x<gg><ii>	0x<gg>FF	A	A	
	Upper Tier Host		0x<gg>FD	A	N	➢ A response from the Upper Tier Host.
	Host		0x<gg>FE	A	A	➢ A response from the Host.
	Equipment		0x<gg><ii>	A	A	➢ A response from Equipment.

#1 The prefix 0x indicates that the number is written in hexadecimal notation. <gg> is the hexadecimal representation of the Group ID. <ii> is the hexadecimal representation of unique Intra-group ID (except 0x00).

#2 'A' represents Applicable, 'N' represents Not applicable.

8.4.1.5 *Propagator and Propagation* of a *Message* — Propagator is a role of a Node that relays a message to the next adjacent Node in response to the destination of the message. Propagation of a message is done by the Node that shall act as Propagator for the specific message.

- *Separate Propagation Ranges for HC and VC* — Propagation is separately managed in a group of Nodes that performs HC or VC. Propagation beyond the boundary of HC and VC is prohibited.
- *How to Propagate a Message* — The Propagator shall send the same message as the one received to the next appropriate adjacent Nodes in the propagation range as defined per the connection topology.
- *Limitation of Propagation Range by Application Code* — To avoid unnecessary propagation of a message in HC or VC, normally, a propagation range is limited to a group of Nodes that need to handle a message that has the same Application Code.

SUPERSEDED

Documents Document Sharing Hub
Full document details: SEMI A1-0521

Table 13 Propagation Rules

Connection Topology / *Rule*#1	*VC (Star Connection)*	*HC (Flow Connection)*	*Note*
Node to play Propagator role	➢ The Node in the center of the star connection may become a Propagator.	➢ Every Node may become a Propagator.	➢ A Node that has only one connection won't be a Propagator.
Propagation of a message that Originator ID or Responder ID is 0x<gg>00	➢ No propagation allowed.	➢ No propagation allowed.	
Propagation of a message that Originator ID and Responder ID are 0x<gg>01 to 0x<gg>FE	➢ When the Node at the center of the star connection received a message which Addressing ID does not contain the own Node ID, the Node shall become a Propagator and propagate the message to the Node that is the destination specified by the Addressing ID and the ORIG_RESP.	➢ The Node that received a message which Addressing ID does not contain the own Node ID shall become a Propagator and propagates the message to the next adjacent Nodes in the same flow direction including branches.	➢ The Node whose own Node ID is not in the Addressing ID of the message shall become a Propagator and shall relay the same information to the next Nodes defined per the connection topology.
Propagation of a broadcast message (Responder ID is 0x<gg>FF)	➢ When the Node at the center of the star connection received a broadcast message, the Node shall become a Propagator and propagate the message to all the Nodes that surrounds the Node except the node that originated the broadcast message. ➢ Propagation shall be done unless the broadcast message requests to stop broadcasting at the own Node.	➢ The Node that received a broadcast message shall become a Propagator and propagates the message to the next adjacent Nodes in the same flow direction including branches. ➢ Propagation shall be done unless the broadcast message requests to stop broadcasting at the own Node.	➢ If the broadcast message requests a response to the Node, the Node shall also act as a Responder and respond to the message. ➢ A Node shall become a Propagator and propagate the message to the Nodes that are in the propagation range.
Avoidance of duplicated propagation due to branch and merge	➢ Not required. (no merge in the topology)	➢ The Node that is in a merge position after a branch should avoid duplicate propagation of the same messages that may come from multiple upstream Lines. Or, a system should be designed so that the duplicated messages do not make unexpected effect. ➢ Addressing ID and Thread ID are used to recognize those duplicate messages.	
Avoidance of infinite loop of a message due to loop and merge	➢ Not required. (no loop in the topology)	➢ The Node that is in the merge position from a loop shall avoid infinite loop of the same message comes back from the loop. ➢ Addressing ID and Thread ID shall be used to recognize the looped back message.	

#1 The prefix 0x indicates that the number is written in hexadecimal notation. <gg> is the hexadecimal representation of the Group ID.

SUPERSEDED

Documents
Document Sharing Hub
Full document details: SEMI A1-0521

8.4.2 *Message Control ID (MC_ID)* — Message Control ID is defined to support message protocol for General Data. Message Control ID consists of Thread ID and Path ID.

8.4.2.1 *Thread ID (THREAD_ID)* — Thread ID is used to indicate which number of message thread the message belongs to. Thread ID shall be assigned by Originator, and Propagator and Responder shall use the same value.

Table 14 Definition of Thread ID (THREAD_ID)

Thread Status	*Value of THREAD_ID*[#1]	*Definition*	*Note*[#1]
Thread Inactive (Optional)	0x0000	Thread function is inactive. ➢ Interleave of messages cannot be used.	➢ An option for less complex applications.
Thread Active (Default)	0x0001 to 0xFFFF	Thread function is active. ➢ Shall be unique under the ORIG_ID. ➢ Originator shall determine the value of Thread ID to uniquely identify message threads that are sent out from the Originator under the Originator ID. ➢ The value of Thread ID is cyclically incremented by one by the Originator for every new message thread. ➢ Responder shall use the same Thread ID value when responds to the message thread.	➢ A message thread is uniquely identified by the combination of Originator ID and Thread ID. ➢ In the case the Group ID or Intra-group ID of the Originator ID is 0x00, uniqueness of message thread shall be managed per Line.

#1 The prefix 0x indicates that the number is written in hexadecimal notation.

8.4.2.2 *Path ID (PATH_ID)* — Path ID indicates message path related status of the message.

Table 15 Definition of Path ID (PATH_ID)

Bit	*Mnemonic*	*Value*	*Definition*	*Note*
D0	-	0	Default	
		1	Reserved for future use.	
D1	-	0	Default	
		1	Reserved for future use.	
D2	-	0	Default	
		1	Reserved for future use.	
D3	-	0	Default	
		1	Reserved for future use.	
D4	-	0	Default	
		1	Reserved for future use.	
D5	-	0	Default	
		1	Reserved for future use.	
D6	RESP_REQ	0	Response is not required or is conditionally required. ➢ Broadcast message thread sets this bit to 0 regardless of its response requirement.	➢ The Originator shall set this bit per the message thread definition.
		1	Response is required.	
D7	ORIG_RESP	0	The message is sent by the Originator. ➢ The Originator shall set this bit to 0.	
		1	The message is sent by the Responder. ➢ The Responder shall set this bit to 1.	

SUPERSEDED

Documents Document Sharing Hub
Full document details: SEMI A1-0521

8.4.3 *Examples of Using Addressing ID and Message Control ID* — This section shows the application examples of Addressing ID (ORIG_ID and RESP_ID) and Message Control ID (THREAD_ID and PATH_ID). For example, GD (56FD, 56FF, 0001, 00) in the figures corresponds to a General Data message (values in hexadecimal notation):

- Group ID = 0x56
- ORIG_ID = 0x56FD
- RESP_ID = 0x56FF
- THREAD_ID = 0x0001
- PATH_ID = 0x00

8.4.3.1 *Example of Application to VC* — Application to star connection where the Host is at the center of the connection.

- *Broadcasting (Blue thread)* — An example of a broadcasting message thread from the Upper Tier Host to the Host and all Equipment. The Upper Tier Host originates the message thread and sends a message to the Host, the Host receives the message and, at the same time, propagates the message to Equipment 1 and Equipment 2. In the case Equipment 1 is requested a response by the content of the message, the equipment responds back to the message thread, and the Host propagates the response to the Upper Tier Host.
- *Between the Adjacent Nodes (Brown thread)* — An example of a message thread between the adjacent Nodes that uses 0x00 for Intra-group ID instead of unique ID. The Upper Tier Host originates the message thread to the Host and getting a response.
- *Between the Specified Nodes (Green thread)* — An example of a message thread between the specified Nodes via the Host that uses unique Intra-group ID. The Upper Tier Host originates the message thread and send a message to the Host, the Host propagates the message to Equipment 2. Equipment 2 responds back to the message and the Host propagates the message to the Upper Tier Host.
- *Thread Management (Red and Purple threads)* — Examples of message threads between the specified equipment and their thread control. Both Red thread (THREAD_ID=0x0001) and Purple thread (THREAD_ID=0x0002) are originated by Equipment 1 (ORIG_ID=0x5601) to Equipment 2 (RESP_ID=0x5602, identified by the combination of the and Thread ID and the Path ID, propagated by the Host toward Equipment 2. the responses from Equipment 2 are propagated by the Host toward Equipment 1.
- *Full Duplex (Light Blue and Red threads)* — Examples of message threads between the specified equipment and their full duplex communication. Those two threads are performed simultaneously in different directions in full duplex mode.
- *Event (Yellow thread)* — Example of a message thread between an equipment and the host. The equipment originates an event to the host without response requirement (PATH_ID=0x00).

SUPERSEDED

Documents
Document Sharing Hub
Full document details: SEMI A1-0521

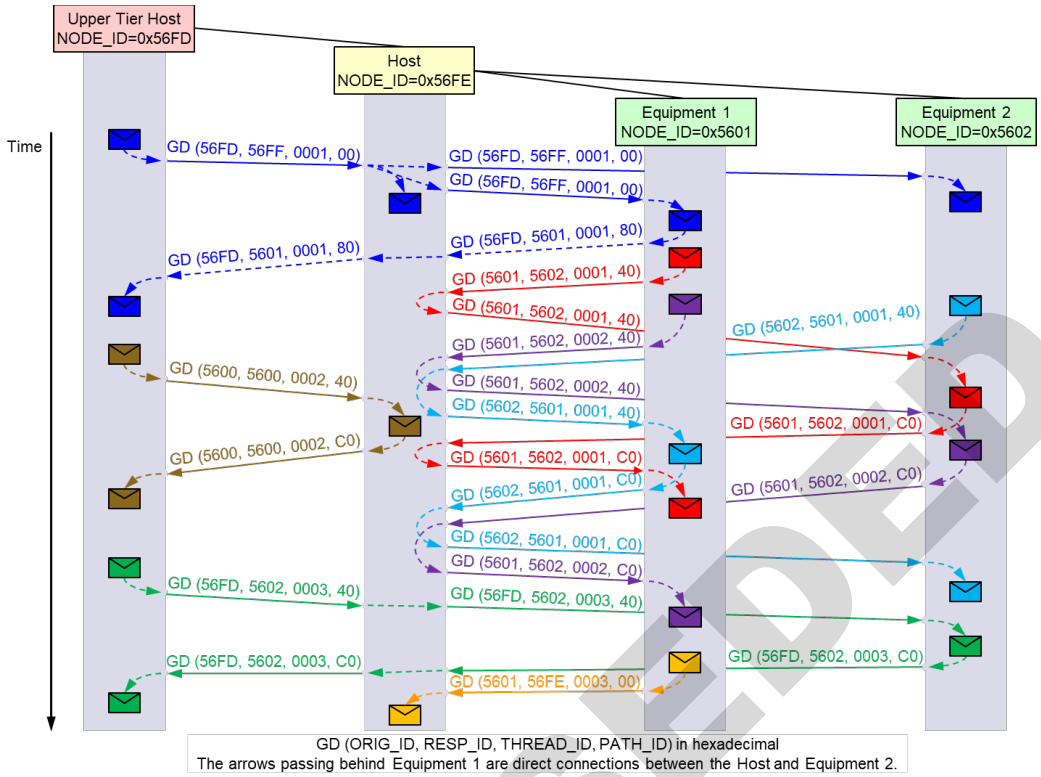

Figure 18
Examples of Application to VC (Star Connection via the Host)

8.4.3.2 *Example of Application to HC* — Application to flow connection.

- *Broadcasting and Conditional Response (Blue thread)* — An example of a broadcasting message thread from Equipment 1 to all other Equipment. Equipment 1 originates the message thread and sends a message to Equipment 2, Equipment 2 receives the message and, at the same time, propagates the message to Equipment 3. Equipment 3 receives the message and may respond back to Equipment 2 depends on the message content, at the same time, propagates the message to Equipment 4. Equipment 2 propagates the message (response from Equipment 3) to Equipment 1.

- *Between the Adjacent Nodes (Brown thread)* — An example of a message thread between the adjacent Nodes that uses 0x00 for Intra-group ID instead of unique ID. Equipment 1 originates the message thread to Equipment 2 and getting a response.

- *Between the Specified Nodes (Green thread)* — An example of a message thread between the specified Nodes via other Nodes that uses unique Intra-group ID. Equipment 4 originates the message thread and send a message to Equipment 3, Equipment 3 and Equipment 2 propagate the message to Equipment 1. Equipment 1 responds back to the message, Equipment 2 and Equipment 3 propagate the message to Equipment 4.

- *Thread Management of Two Message Threads (Red and Purple threads)* — Examples of message threads between the specified equipment and thread control of them. Both Red thread (THREAD_ID=0x0001) and Purple thread (THREAD_ID=0x0002) are originated by Equipment 2 (ORIG_ID=0x5602) to Equipment 3 (RESP_ID=0x5603), identified by the combination of the Originator ID and Thread ID. Those messages are, responded by Equipment 3 to Equipment 2.

- *Full Duplex (Light Blue and Red threads)* — Examples of a message threads between the specified equipment and full duplex operation of them. Those two threads are performed simultaneously in different directions in full duplex mode.

SUPERSEDED

Documents
Document Sharing Hub
Full document details: SEMI A1-0521

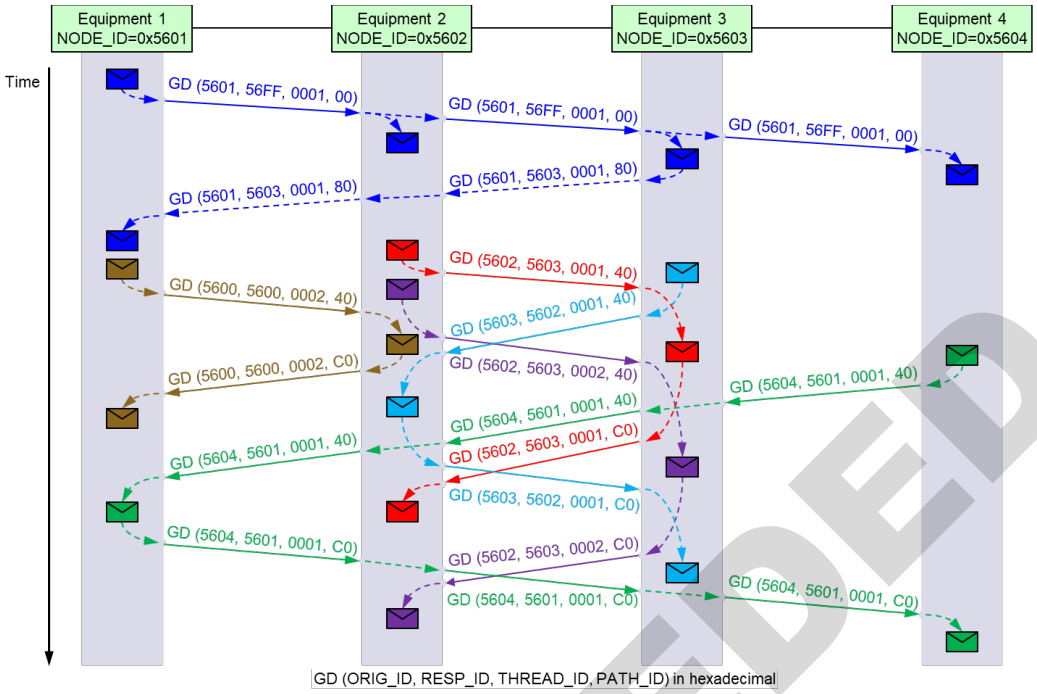

Figure 19
Example of Application to HC (Flow Connection)

9 Data Handshake Requirements

9.1 *Data Handshake* — This section defines state models, Logical Signal assignment and scenarios for Data Handshake that is used to transfer General Data.

9.1.1 *State Model for Data Handshake* — This section defines the state model of Data Handshake. Data Handshake is full duplex, that is, it has independent Data Sender and Data Receiver for both directions of communication.

SUPERSEDED

Documents
Document Sharing Hub
Full document details: SEMI A1-0521

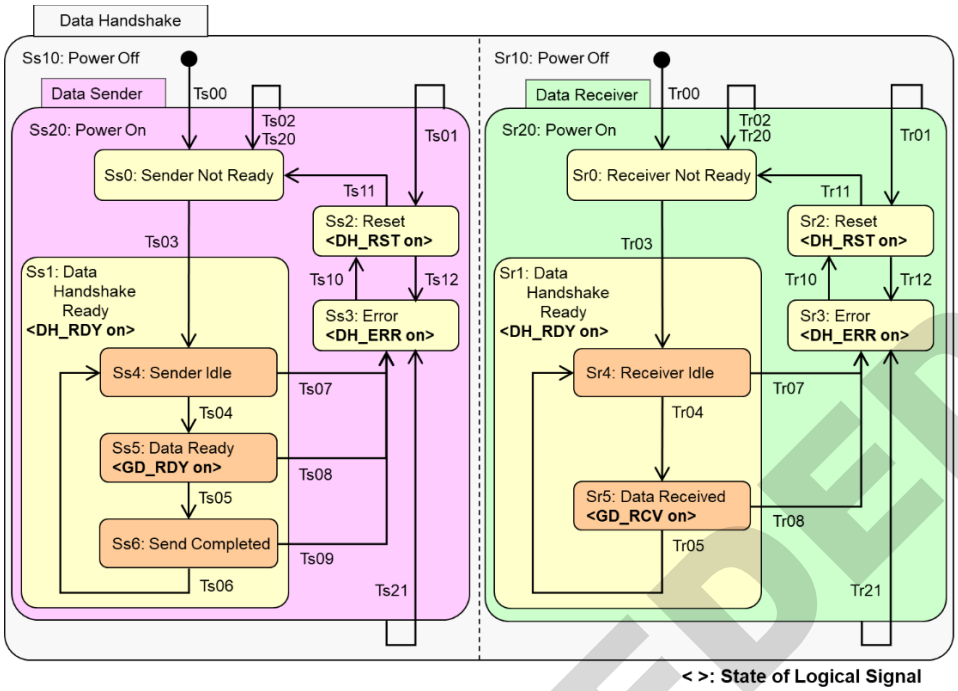

Figure 20
State Model of Data Handshake

9.1.1.1 *Logical Signal Set for Data Handshake* — Logical Signal set to be used for Data Handshake is as below. This table shows a Logical Signal set to be used for one direction by one pair of Data Sender and Data Receiver. Two sets are used for bi-directional communication with fully duplex mode by two pairs of Data Sender and Data Receiver.

Table 16 Logical Signal Set for Data Handshake for One Direction

Purpose	*Mnemonic*	*Signal Name*	*Direction*[#1]	*Definition*	*Note*
Status Signals	DH_RDY	Data Handshake Ready	DS➔DR	Data Handshake of Data Sender is ready.	
	DH_RDY	Data Handshake Ready	DS🡐DR	Data Handshake of Data Receiver is ready.	
	DH_ERR	Data Handshake Error	DS➔DR	Data Handshake of Data Sender is in Error state.	
	DH_ERR	Data Handshake Error	DS🡐DR	Data Handshake of Data Receiver is in Error state.	
	DH_RST	Data Handshake Reset	DS➔DR	Reset Data Handshake in other equipment.	
	DH_RST	Data Handshake Reset	DS🡐DR	Reset Data Handshake in other equipment.	
Timing Signals	GD_RDY	GD_DATAn Ready	DS➔DR	Indicate General Data on GD_DATAn is valid.	
	GD_RCV	GD_DATAn Receive	DS🡐DR	Indicate General Data on GD_DATAn is sampled.	
Data	GD_DATAn	General Data frame	DS➔DR	Data frame of General Data. Sender outputs data frame of General Data or a linkage information to General Data on GD_DATAn.	Multiple bytes of General Data field. Length is not defined in this Standard.

#1 This column shows a signal direction. DS means data sender; DR means data receiver.

SUPERSEDED

Documents Document Sharing Hub
Full document details: SEMI A1-0521

9.1.1.1.1 *Referenced Triggers from Inside of Equipment* — Referenced triggers from inside of equipment are shown in following table. This Standard does not define any signals from inside of equipment, however, references the timings as shown in the table.

Table 17 Referenced Triggers from Inside of Equipment

Mnemonic	*Description*
DH_Reset_Request	Indicate that equipment requests to reset Counterpart Port.
DH_Enable	Indicate that equipment wants to perform Data Handshake.
DH_Send_Request	Indicate that equipment has a data to be sent.
DH_Recovery	Indicate the timing equipment completed error processing (automatic, operator/upstream assistance or etc.) and start recovery with asserting reset signal.
DH_Media_Error	Indicate that equipment detected an error in Media Interface tier. (See Figure 'Specification Structure'.)

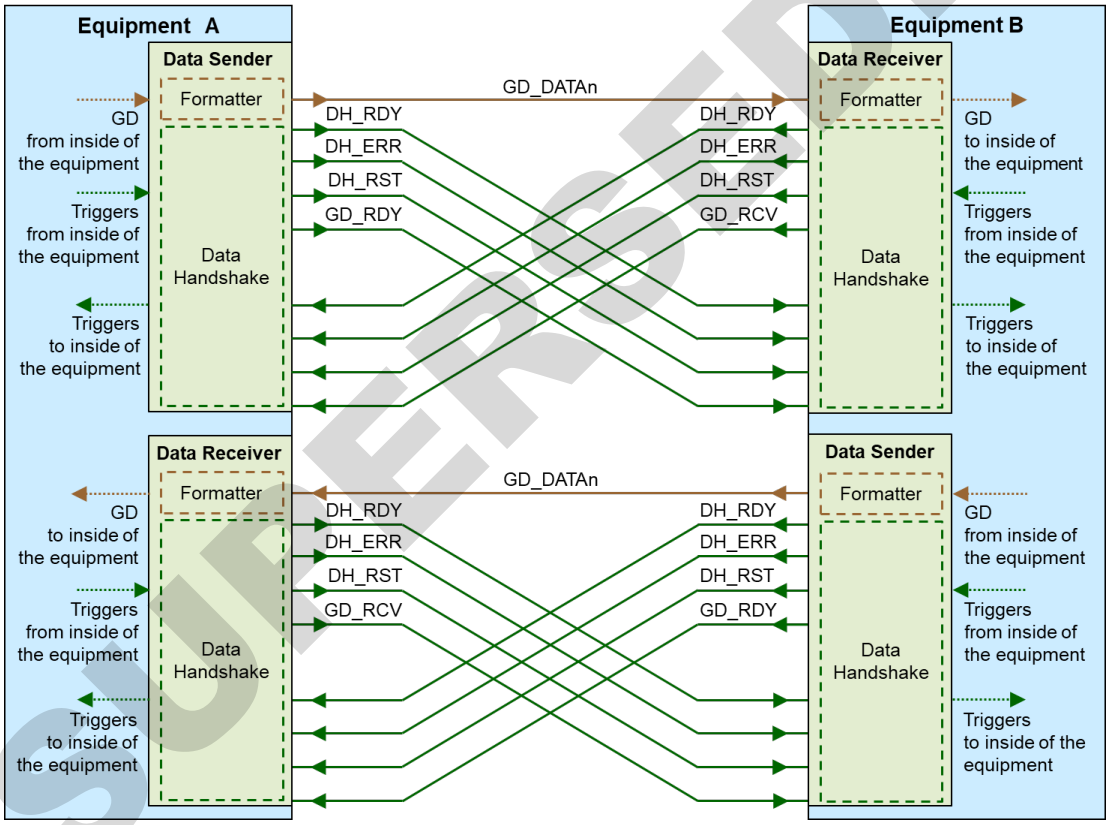

Figure 21
Logical Signal Set for Data Handshake (Full Duplex)

SUPERSEDED

Documents
Document Sharing Hub
Full document details: SEMI A1-0521

9.1.1.2 *State and Transition for Data Handshake* — This section defines States and Transitions of Data Handshake.

Table 18 State and Transition of Data Sender Side

State			*Transition*				
➔*[DH_RDY, DH_ERR, DH_RST, GD_RCV]* ←*[DH_RDY, DH_ERR, DH_RST, GD_RDY]*							
No	*Name*	*Definition*	*No.*	*Trigger*	*Action*	*New State*	*Comments*
Ss10	Power Off ←[i,i,i,i]	The power is off.	Ts00	Power on ➔[d,d,d,d]	←[0,0,0,0] All control signals off	Ss0	
Ss20	Power On ←[s,s,s,s]	Power is on and system is running.	Ts01	DH_Reset_Request on ➔[d,d,0,d]	←[0.0.1.0] DH_RST on Start T_DRST[#2]	Ss2	
			Ts02	➔[d,d,1,d] Reset DH_RST on	←[0,0,0,0] If T_DRST[#2] is started, cancel T_DRST[#2].	Ss0	
			Ts20	DH_Enable off ➔[d,d,d,d]	←[0,0,0,0] All control signals off	Ss0	
			Ts21	DH_Media_Error on ➔[d,d,d,d]	←[k,1,k,k] DH_ERR on Recommend keeping other control signals unchanged.	Ss3	
Ss0	Sender Not Ready ←[0,0,0,0]	Data Sender is not ready yet.	Ts03	DH_Enable on ➔[d,0,0,0] Other than DH_RDY are off	←[1,0,0,0] DH_RDY on	Ss4	
Ss1	Data Handshake Ready ←[1,0,0,s]	Data Handshake is ready.	-	-	-	-	-
Ss4	Sender Idle ←[1,0,0,0] GD_RDY off	Data Sender is in idle state.	Ts04	DH_Send_Request on ➔[1,0,0,0] DH_RDY on	←Set General Data ←[1,0,0,1] GD_RDY on	Ss5	
			Ts07	Communication error;	←[k,1,k,k] DH_ERR on Recommend keeping other control signals unchanged.	Ss3	May call operator assistance for recovery.
			(a)	➔[d,0,0,1] Unexpected response			
			(b)	➔[d,1,0,d] DH_ERR on			
Ss5	Data Ready ←[1,0,0,1] GD_RDY on	Data Sender is sending out General Data and waiting for a reply from DR[#1].	Ts05	➔[1,0,0,1] GD_RCV on	←[1,0,0,0] GD_RDY off	Ss6	
			Ts08	Communication error;	←[k,1,k,k] DH_ERR on Recommend keeping other control signals unchanged.	Ss3	May call operator assistance for recovery.
			(a)	➔[0,0,0,d] Unexpected response.			
			(b)	Timeout[#3]. ➔[1,0,0,0]			
			(c)	➔[d,1,0,d] DH_ERR on			
Ss6	Send Completed ←[1,0,0,0] GD_RDY off	Data Sender waits for receive completion from DR[#1].	Ts06	➔[1,0,0,0] GD_RCV off	None.	Ss4	
			Ts09	Communication error;	←[k,1,k,k] DH_ERR on Recommend keeping other control signals unchanged.	Ss3	May call operator assistance for recovery.
			(a)	➔[0,0,0,d] Unexpected response.			
			(b)	Timeout[#3]. ➔[1,0,0,1]			
			(c)	➔[d,1,0,d] DH_ERR on			

SUPERSEDED

Documents Document Sharing Hub
Full document details: SEMI A1-0521

State			Transition				
➔[DH_RDY, DH_ERR, DH_RST, GD_RCV] ➔[DH_RDY, DH_ERR, DH_RST, GD_RDY]							
No	*Name*	*Definition*	*No.*	*Trigger*	*Action*	*New State*	*Comments*
Ss2	Reset ➔[0.0.1.0] RH_RST on	Data Sender is waiting for DR#1 to be reset during T_DRST#2.	Ts11	T_DRST#2 expired ➔[0,0,0,0]	➔[0,0,0,0] All control signals off	Ss0	
			Ts12	T_DRST#2 expired ➔[n0,n0,0,n0] Not all control signals are off.	➔[0,1,0,0] DH ERR on, DH_RST off	Ss3	DR#1 cannot be reset.
Ss3	Error ➔[k,1,k,k] DH_ERR on	Error has been occurred and Data Sender is under error recovery.	Ts10	DH_Recovery on ➔[d,d,0,d]	➔[0,0,1,0] DH_RST on Start T_DRST#2	Ss2	

#1 DR is an acronym of data receiver.

#2 T_DRST is a timer to ensure the duration of reset so that Counterpart Port has enough time to capture it. Actual value of the timer should be defined per type of media in corresponding Subordinate Standard.

#3 No response from DR within a defined time per application.

Table 19 State and Transition of Data Receiver Side

State			Transition				
➔[DH_RDY, DH_ERR, DH_RST, GD_RDY] ➔[DH_RDY, DH_ERR, DH_RST, GD_RCV]							
No	*Name*	*Definition*	*No.*	*Trigger*	*Action*	*New State*	*Comments*
Sr10	Power Off ➔[i,i,i,i]	The power is off.	Tr00	Power on ➔[d,d,d,d]	➔[0,0,0,0] All control signals off.	Sr0	
Sr20	Power On ➔[s,s,s,s]	Power is on and system is running.	Tr01	DH_Reset_Request on ➔[d,d,0,d]	➔[0,0,1,0] DH_RST on Then start T_DRST#2	Sr2	
			Tr02	➔[d,d,1,d]DH_RST on	➔[0,0,0,0] If T_DRST#2 is started, cancel T_DRST#2.	Sr0	
			Tr20	DH_Enable off ➔[d,d,d,d]	➔[0,0,0,0] All control signals off	Sr0	
			Tr21	DH_Media_Error on ➔[d,d,d,d]	➔[k,1,k,k] DH_ERR on Recommend keeping other control signals unchanged.	Sr3	
Sr0	Receiver Not Ready ➔[0,0,0,0]	Data Receiver is not ready yet.	Tr03	DH_Enable on ➔[d,0,0,0] Other than DH_RDY are off	➔[1,0,0,0] DH_RDY on	Sr4	All control signals are off.
Sr1	Data Handshake Ready ➔[1,0,0,s] DH_RDY on	Data Handshake is ready.	-	-	-	-	-
Sr4	Receiver Idle ➔[1,0,0,0] GD_RCV off	Data Receiver is in idle state.	Tr04	➔[1,0,0,1] GD_RDY on	➔Read GD in ➔[1,0,0,1] GD_RCV on	Sr5	
			Tr07	Communication error;		Sr3	

SUPERSEDED

Documents
Document Sharing Hub
Full document details: SEMI A1-0521

State			Transition				
➔[DH_RDY, DH_ERR, DH_RST, GD_RDY] ←[DH_RDY, DH_ERR, DH_RST, GD_RCV]							
No	*Name*	*Definition*	*No.*	*Trigger*	*Action*	*New State*	*Comments*
			(a)	➔[0,0,0,1] Unexpected response.	←[k,1,k,k] DH_ERR on Recommend keeping other control signals unchanged.		May call operator assistance for recovery.
			(b)	➔[d,1,0,d]DH_ERR on			
Sr5	Data Received ←[1,0,0,1] GD_RCV on	Data Receiver received the data and is sending out a reply.	Tr05	➔[1,0,0,0]GD_RDY off	←[1,0,0,0] GD_RCV off	Sr4	
			Tr08	Communication error;	←[k,1,k,k] DH_ERR on Recommend keeping other control signals unchanged.	Sr3	May call operator assistance for recovery.
			(a)	➔[0,0,0,d] Unexpected response.			
			(b)	Timeout#3. ➔[1,0,0,1]			
			(c)	➔[d,1,0,d]DH_ERR on			
Sr2	Reset ←[0,0,1,0] DH_RST on	Data Receiver is waiting for DS#1 to be reset during T_DRST#2.	Tr11	T_DRST#2 expired ➔[0,0,0,0]	←[0,0,0,0]	Sr0	
			Tr12	T_DRST#2 expired ➔[n0,n0,0,n0] Not all control signals are off.	←[0,1,0,0] DH ERR on, DH_RST off	Sr3	DS#1 cannot be reset.
Sr3	Error ←[k,1,k,k] DH_ERR on	Error has been occurred and Data Receiver is under error recovery.	Tr10	DH_Recovery on ➔[d,d,0,d]	←[0,0,1,0] DH_RST on Start T_DRST #2	Sr2	

#1 DS is an acronym of data sender.

#2 T_DRST is a timer to ensure the duration of reset so that Counterpart Port has enough time to capture it. Actual value of the timer should be defined per type of media in corresponding Subordinate Standard.

#3 No response from DS within a defined time per application.

9.1.2 *Logical Signal Scenarios for Data Handshake* — This section defines the scenarios of the Logical Signal for Data Handshake in a relation with the state models. Note that one signal may indicate multiple states in the state model.

9.1.2.1 *Start Up and Shut Down* — This scenario shows the sequence to start up and shut down a Line. DH_RDY signals from both sides indicate that both communication means are in service. Once a Line is started up and entered Ss4 and/or Sr4, then Data Handshake is ready to be performed. Unexpected shut down may skip Ss4 and/or Sr4 states and may make signals directly fall into Ss10 and Sr10 states.

SUPERSEDED

Documents Document Sharing Hub
Full document details: SEMI A1-0521

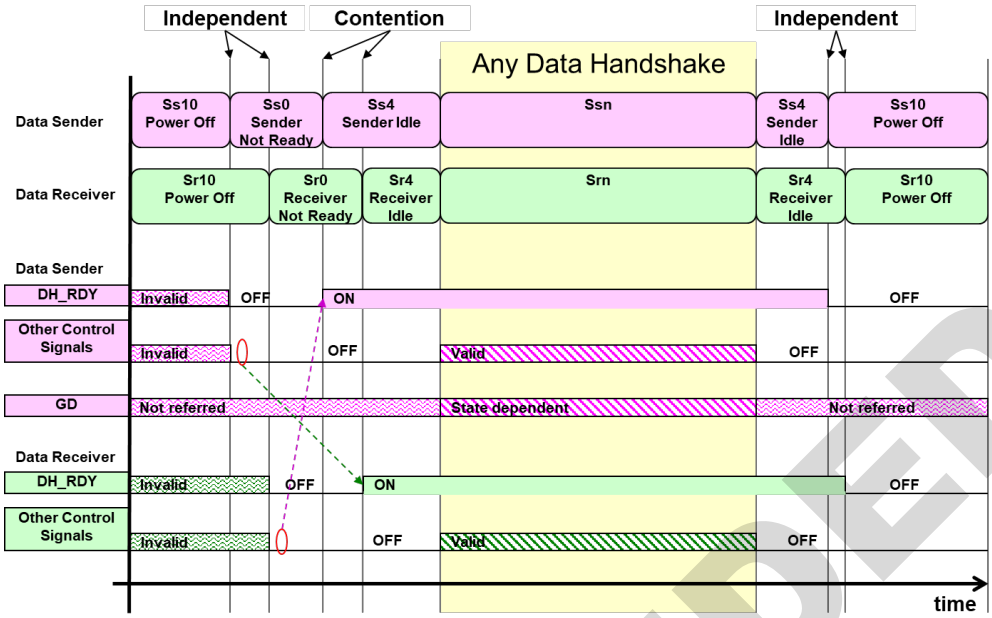

Figure 22
Start Up and Shut Down

9.1.2.2 *General Data Transfer Scenario* — This scenario shows the scenario of General Data transfer. After confirming that Data Receiver is in an idle state by checking DH_RDY on, DH_ERR off, DH_RST off and GD_RCV off, Data Sender sets GD, then sets GD_RDY on to notify that General Data is ready on the interface. Data Receiver knows that General Data is ready by GD_RDY on, and samples GD, then sets GD_RCV on to notify that General Data is read. Data Sender knows that General Data is read by GD_RCV on, and sets GD_RDY off to notify end of scenario. Data Receiver knows an end of the scenario and sets GD_RCV off. Data Sender knows regular termination of scenario by GD_RCV off and terminates scenario internally.

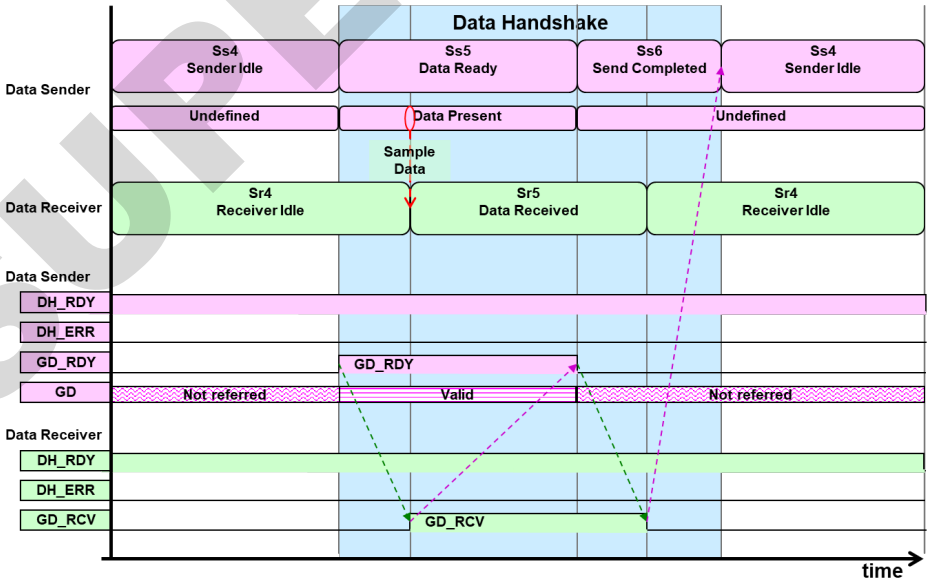

Figure 23
Data Handshake Scenario

SUPERSEDED

Documents
Document Sharing Hub
Full document details: SEMI A1-0521

10 Material Handshake Requirements

10.1 *Material Handshake* — This section defines state models, Logical Signal assignment and scenarios for Material Handshake. Material Handshake performs handshake for Material Transfer. Material Transfer consists of Material Data Transfer and Physical Material Handoff.

10.1.1 *Material Handshake Overview* — Material Handshake consists of the following two tiers of handshakes, and those handshakes consist of the elemental handshake scenarios shown in the following table.

- *Mode Resolution Handshake* — A handshake that processes transfer request (Send Request), transfers Material Data, and determines transfer type and direction.
- *Material Handoff Handshake* — A handshake that performs physical handoff of Material and is performed during MT Send Active, MT Swap Active, or MT Receive Active state of Mode Resolution Handshake.

Table 20 Material Handshake Overview

<table>
<tr><th colspan="3">Port 0</th><th>A1 State</th><th>A1 State</th><th colspan="3">Port 1</th></tr>
<tr><td rowspan="13">Mode Resolution Handshake</td><td colspan="2">Error Reset</td><td>MH Error</td><td>MH Error</td><td colspan="3">Error Reset</td><td rowspan="13">Mode Resolution Handshake</td></tr>
<tr><td colspan="2">(from Power on or Error) Initialize Scenario</td><td>MH states</td><td>MH states</td><td colspan="3">Initialize Scenario (from Power on or Error)</td></tr>
<tr><td colspan="2">Ready to start new Scenario</td><td>MT Idle</td><td>MT Idle</td><td colspan="3">Ready to start new Scenario</td></tr>
<tr><td colspan="2">Mode Resolution Scenario</td><td>MT states</td><td>MT states</td><td colspan="3">Mode Resolution Scenario</td></tr>
<tr><td rowspan="9">Material Handoff Handshake</td><td colspan="2">Startup Scenario</td><td rowspan="9">ST0~STcomp (STc)</td><td rowspan="2">MT Send / Swap / Receive (S/S/R) Active</td><td rowspan="9">MT Send / Swap / Receive (S/S/R) Active</td><td rowspan="9">ST0~STcomp (STc)</td><td colspan="2">Startup Scenario</td><td rowspan="9">Material Handoff Handshake</td></tr>
<tr><td colspan="2">Pause Scenario</td><td>Pause Scenario</td></tr>
<tr><td colspan="2">Pause Initiative Change Scenario</td><td rowspan="2">MT Send / Swap / Receive (S/S/R) Active</td><td>Pause Initiative Change Scenario</td></tr>
<tr><td>Abort Scenario</td><td>Pause Recovery Scenario</td><td>Pause Recovery Scenario</td><td>Abort Scenario</td></tr>
<tr><td colspan="2" rowspan="2">Termination Scenario</td><td rowspan="2">Termination Scenario</td></tr>
<tr></tr>
<tr></tr>
<tr></tr>
<tr><td colspan="2">Ready to start new Scenario</td><td>MT Idle</td><td>MT Idle</td><td colspan="3">Ready to start new Scenario</td></tr>
</table>

10.1.2 *Ownership Transfer Timing of Material and MD* — Normally, ownership of the Material and its MD is transferred at the timing both Ports entered STcomp state.

10.1.3 *Mode Resolution Handshake* — This section defines Mode Resolution Handshake.

10.1.3.1 *Mode Resolution Handshake and Track Types* — To provide a systemized and unified definition applicable to all Track Types, Mode Resolution Handshake contains all states and transitions that cover Uni-Direction, Alternate-Direction and Bi-Direction operations. Equipment only need to implement the states and transitions required for the Track Types the equipment has.

- *Send Priority for Alternate-Direction* — To solve Material Send Request contention that potentially occurs in Alternate-Direction operation, Send Priority shall be set to the Ports beforehand. In the case both Ports assert Material Send Request at close timing and Send Request contention occur, the Port that has Higher Send Priority will be the Send Port unless the request is not declined by the Counterpart Port.

SUPERSEDED

Documents Document Sharing Hub
Full document details: SEMI A1-0521