SEMI A2-0521
SPECIFICATION FOR SURFACE MOUNT ASSEMBLER SMART HOOKUP (SMASH)

This Standard was technically approved by the Automation Technology Global Technical Committee. This edition was approved for publication by the global Audits and Reviews Subcommittee on March 9, 2021. Available at www.semiviews.org and www.semi.org in May 2021; originally published April 2019; previously published October 2020.

Table of Contents

1 Purpose 2
2 Scope 2
3 Limitations 2
4 Referenced Standards and Documents 2
5 Terminology 2
6 Conventions 3
7 Conceptual Description 7
8 Requirements 9
9 Parameter Definitions 16
10 Vertical Communication (VC) Message Requirements 22
11 Horizontal Communication (HC) Message Requirements 32
12 Panel and Panel Data Transfer Requirements 38
13 Requirements for Compliance 43
14 Related Documents 45
Related Information 1 Use of SMEMA Compliant Equipment 46
Related Information 2 Applicable Equipment 48

SUPERSEDED

Documents Document Sharing Hub
Full document details: SEMI A2-0521

1 Purpose

1.1 The purpose of this Standard is to provide a standardized automation interface specification to be used for the equipment control in an assembly line for printed circuit board (PCB) that uses surface mount technology (SMT).

1.2 The purpose of this Standard is to provide an interface specification that replaces conventional electrical interface with a network connection and adds data communication capability.

2 Scope

2.1 The scope of this Standard is to define an automation interface specification to be used for SMT assembly line, which includes:

- A control interface between the host and equipment.
- A control interface between equipment via the adjacent equipment.
- A logistics control interface between adjacent equipment, which transfers a PCB and its data as a set.

2.2 The scope of this Standard is to define an automation interface specification that is based on SEMI A1 and SEMI A1.1.

NOTICE: SEMI Standards and Safety Guidelines do not purport to address all safety issues associated with their use. It is the responsibility of the users of the Documents to establish appropriate safety and health practices, and determine the applicability of regulatory or other limitations prior to use.

3 Limitations

3.1 *SEMI A1/A1.1 Compliant Equipment Only* — This Standard is intended to be applied to the equipment that is capable to be compliant with the required part of SEMI A1 and SEMI A1.1 specified in this Standard.

4 Referenced Standards and Documents

4.1 *SEMI Standards and Safety Guidelines*

SEMI A1 — Specification for Production Equipment Smart Connection Interface (PESCI)

SEMI A1.1 — Specification for TCP/IP Interface for Production Equipment Smart Connection Interface (PESCI)

NOTICE: Unless otherwise indicated, all documents cited shall be the latest published versions.

5 Terminology

5.1 *Abbreviations and Acronyms*

5.1.1 *E2E* — equipment-to-equipment

5.1.2 *ID* — Identifier

5.1.3 *M2M* — machine-to-machine

5.1.4 *PCB* — printed circuit board

5.1.5 *PLC* — programmable logic controller

5.1.6 *SMT* — surface mount technology

5.1.7 *TCP* — Transmission Control Protocol

5.1.8 *TCP/IP* — Transmission Control Protocol/Internet Protocol

5.2 *Definitions*

5.2.1 *downstream equipment* — Equipment that is in the position to receive Material in an equipment-to-equipment interface in manufacturing line.

5.2.2 *host* — the factory computer system or an intermediate system that represents the factory and the user to the equipment.

SUPERSEDED

Documents
Document Sharing Hub
Full document details: SEMI A2-0521

5.2.3 *Panel* — a printed circuit board under production and assembly that may contain multiple products not cut out as products yet.

5.2.4 *Magazine* — a container that is used to carry multiple Panels at the same time.

5.2.5 *Route* — a logical path of Panels that have the commonality in production condition such as the same width of conveyor or the use of same assembly parts, etc. Multiple Routes may be set on the same Track.

5.2.6 *Segment* — a part of a production line that has a Flow Connection and controlled by one host.

5.2.7 *user* — a human who represent the factory and enforce the factory operation model to the factory resources. A user is considered to be responsible for many setup and configuration activities that cause the equipment to best conform to factory operations practices.

5.2.8 *upstream equipment* — Equipment that is in the position to send Material in an equipment-to-equipment interface in manufacturing line.

5.3 *Abbreviations, Acronyms, and Definitions from SEMI A1*

5.3.1 *GD* — General Data

5.3.2 *HC* — Horizontal Communication

5.3.3 *MD* — Material Data

5.3.4 *VC* — Vertical Communication

5.3.5 *Data Handshake*

5.3.6 *Equipment ID*

5.3.7 *General Data*

5.3.8 *Horizontal Communication*

5.3.9 *Line*

5.3.10 *Master Port*

5.3.11 *Material*

5.3.12 *Material Data*

5.3.13 *Material Handshake*

5.3.14 *Node ID*

5.3.15 *Port*

5.3.16 *Receive Port*

5.3.17 *Slave Port*

5.3.18 *Starter Port*

5.3.19 *Send Port*

5.3.20 *Terminator Port*

5.3.21 *Track*

5.3.22 *Vertical Communication*

5.4 *Abbreviations, Acronyms, and Definitions from SEMI A1.1*

5.4.1 None.

6 Conventions

6.1 *Definitions* — This Standard uses the following definitions.

SUPERSEDED

Documents Document Sharing Hub
Full document details: SEMI A2-0521

6.1.1 *Data Type Definition* — This Standard uses the following data type definitions.

Table 1 Data Type Definition

Data Type	*Definition*
STRUCT	Structured data of Elements (parameters, STRUCTs, LISTs, or values), which is defined as below. STRUCT of: Element a Element b : Element n
LIST	Listed data of multiple instances of single parameter, which is defined as below. LIST of: Number of the Parameter Instances (a parameter or a value) Parameter The actual structure of the LIST generated by the above definition is: n (= the number of the Parameter Instances) Parameter Instance (1) Parameter Instance (2) : Parameter Instance (n)
BOOL	1-bit Boolean: TRUE (Signal On) = 1, FALSE (Signal Off) = 0
BYTE	8-bit binary data
WORD	16-bit binary data
CHAR	Single-byte ASCII character
STRING	ASCII character string. Alphanumeric characters only. Fixed length. Unless otherwise specified, use from the lowest address byte and fill unused bytes with NULL.
UINT8	8-bit unsigned integer
UINT16	16-bit unsigned integer
UINT32	32-bit unsigned integer

6.1.2 *Value Expression* — This Standard uses the following value expressions.

- *Hexadecimal Format* — The 0x is used for numbers in hexadecimal format.
- *ASCII Character Format* — Direct character expression is used for characters in ASCII format. Alphanumeric characters only.

6.1.3 *Requirement Level Definition* — This Standard uses the following requirement levels in the 'Rq.' column of tables.

Table 2 Requirement Level Definition

Mnemonic	*Name*	*Implementation*	*Use*	*Description*
R	Required	Mandatory	Mandatory	An item that shall be implemented and used. For parameters, the item shall be implemented and given a valid value for use.
C	Conditional	Mandatory	Not a mandatory	An item that shall be implemented but may not be used in some cases. For parameters, the item shall be implemented but may not be given a valid value for use in some cases.
O	Optional	Not a mandatory	Not a mandatory	An item that may be implemented and used in some cases.

SUPERSEDED

Documents
Document Sharing Hub
Full document details: SEMI A2-0521

6.2 *Table Formats* — This Standard uses the following table formats.

6.2.1 *Parameter Definition Table* — This Standard uses the following table format for parameter definitions.

Table 3 Parameter Definition Table

Parameter Name	*Form/Type*	*Range/Multiplicity*	*Description*

- *Parameter Name* — This column defines the name of the parameter.
- *Form/Type* — This column defines the format or type of the parameter. See the section 'Data Type Definition' for Type expressions.
- *Range/Multiplicity* — This column defines the range or multiplicity of the value for the parameter.
- *Description* — This column is used to describe the parameter.

6.2.2 *Message Category Definition Table* — This Standard uses the following table format for Message Category Definitions.

- *Message Category* — a group of messages that supports functions for similar purpose. A Message Category is specified by AC and CC.

Table 4 Message Category Definition Table

Message Category	*General Data ID*			*Description*
	AC	*CC*	*FC*	
			-	

6.2.2.1 *Message Category* — This column defines the name of the message category.

6.2.2.2 *General Data ID* — This column and sub-columns define the values to be used for General Data ID defined in SEMI A1. See definitions in SEMI A1.

- *AC* — Application Code
- *CC* — Category Code
- *FC* — Function Code. Values are defined in the corresponding Message Description tables.

6.2.2.3 *Description* — This column is used to describe the message category.

6.2.3 *Message Thread Description Table* — This Standard uses the following table format for message thread descriptions.

Table 5 Message Thread Description Table

Originator				*Responder*		*Rq.*	*Description*
Message ORIG_RESP =0	*Nd.*	*Addressing ID*		*Nd.*	*Message ORIG_RESP =1*		
		ORIG_ID	*RESP_ID*				

SUPERSEDED

Documents Document Sharing Hub
Full document details: SEMI A2-0521

6.2.3.1 *Originator, Responder* — These columns shows which side the following rows are mentioning on.

6.2.3.2 *Message* — These two Message columns define the messages used for the message thread.

- *ORIG_RESP* — ORIG_RESP =0 is the message from Originator and ORIG_RESP =1 is the message from the Responder. See SEMI A1 for the definition of ORIG_RESP.
- *0x<ee>* — a representation of an even value of Function Code (FC) used for the suffix of the message name.

6.2.3.3 *Nd.* — This column defines the type of Node. H is the host; E is the equipment.

6.2.3.4 *Addressing ID* — This column and its sub-columns (ORIG_ID and RESP_ID) define the values to be used for the Addressing ID of the message thread. See definitions in SEMI A1 for the definition of Addressing ID.

- *0x<gg>* — a representation of Group ID in hexadecimal. Normally, for intra-Group communication, 0x00 is used. Other values are used for the case inter-Group communication is required.
- *0x<ii>* — a representation of unique Intra-group ID of equipment in hexadecimal.

6.2.3.5 *Rq.* — This column defines the requirement level. See the section 'Requirement Level Definition'.

6.2.3.6 *Description* — This column is used to describe the message.

6.2.4 *Message Description Table* — This Standard uses the following table format for message descriptions.

- *Message Description* — a description of messages within the specified Message Category that assigns FC and provides the following explanations.

Table 6 Message Description Table

Message	*General Data ID*			*Description*
	AC	*CC*	*FC*	
	-			

6.2.4.1 *Message* — This column defines the name of the message.

- *0x<ee>* — a representation of an even value of Function Code (FC) used for the suffix of the message name.

6.2.4.2 *General Data ID* — This column and sub-columns define the values to be used for General Data ID defined in SEMI A1. See definitions in SEMI A1.

- *AC* — Application Code. Actual value is not defined in this table but defined in the Message Category Definition table the category belongs.
- *CC* — Category Code. Actual value is not defined in this table but defined in the Message Category Definition table the category belongs.
- *FC* — Function Code. 0x<ee> is a representation of an even value.

6.2.4.3 *Description* — This column is used to describe the message.

6.2.5 *Message Parameter Definition Table* — This Standard uses the following table format to define the parameters used in a message.

- *Ordered List in GD_CONTENT* — Message parameters are put as an ordered list into GD_CONTENT defined in SEMI A1.

Table 7 Message Parameter Definition Table

Parameter Name	*Rq.*	*Description*

SUPERSEDED

Documents
Document Sharing Hub
Full document details: SEMI A2-0521

- *Parameter Name* — This column defines the name of the used parameter.
- *Rq.* — This column defines the requirement level. See the section 'Requirement Level Definition'.
- *Description* — This column is used to describe the message parameter.

7 Conceptual Description

7.1 *Conceptual Description* — This section describes the concept of this Standard and includes no requirement.

7.2 *Image of the Production Line* — The image of typical SMT assembly line is as shown below.

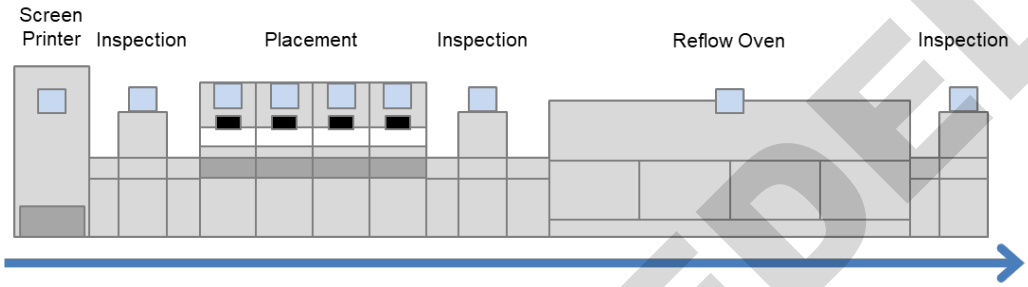

Figure 1
Image of Typical SMT Assembly Line

7.3 *Background* — This Standard is developed to meet industry expectations such as:

- *Next Generation M2M Interface* — Introduction of the next generation M2M (E2E) interface that is a superset of the conventional electrical interface and has data communication capability.
- *Standardized M2M Interface* — Standardized M2M (E2E) interface for Panel handoff between various equipment from various suppliers.
- *Transfer Panel Data with the Panel* — Communication capability to transfer a Panel and the Panel Data that belongs to the Panel as a set: PanelID that specifies the Panel individually and uniquely, ProductID that identifies the product to which the Panel belongs, Process Log of the Panel such as an inspection result, etc.
- *Standardized Product Change Scheme* — Automated setup change of the equipment in the assembly line for the change of the products to be assembled.
- *PLC Conformance* — Introduction of the next generation equipment interface that can be dealt with PLC.

7.4 *Prerequisites and Restrictions* — This Standard is designed based on the following prerequisites and restrictions.

- *Communication Capability* — Equipment shall have a network communication capability.
- *Panel ID Management* — The PanelID should be transferred starting from the equipment that has a PanelID reader to downstream equipment.
- *Product ID Management* — The relationship between ProductID and PanelID should be defined beforehand.
- *Virtual A1 Controller* — A simple Panel transport equipment (such as a conveyor) that does not have a communication capability should be controlled by SEMI A1 capable additional controller that interprets the conventional interface the equipment uses or by the adjacent upstream or downstream equipment.

7.5 *Position of This Standard* — This Standard is in the upper tier of SEMI A1 and provides SMT assembly line specific specifications to be used by the user code for host-equipment and equipment-to-equipment (E2E. also called M2M) interfaces.

SUPERSEDED

Documents Document Sharing Hub
Full document details: SEMI A2-0521

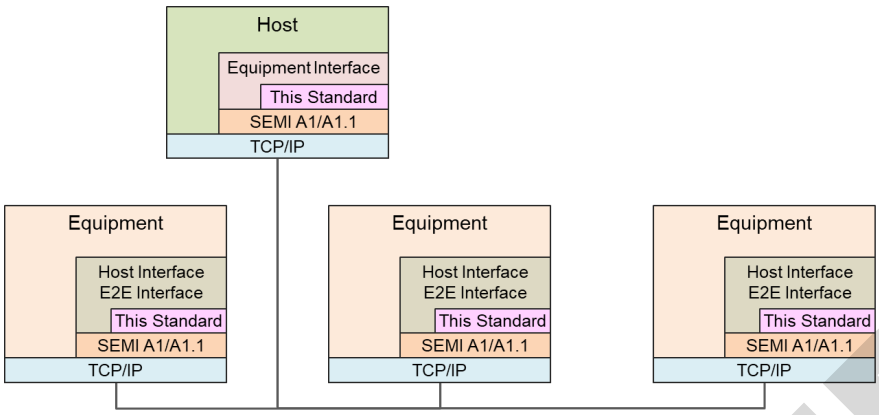

Figure 2
Position of This Standard

7.6 *Line Topology and Control Scheme* — The SMT assembly line that this Standard controls has the following topology.

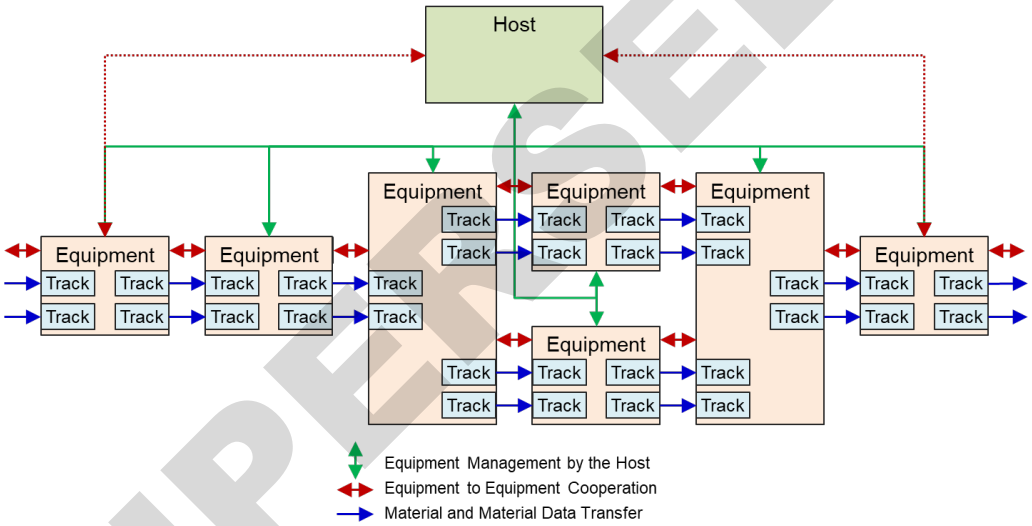

Figure 3
Line Topology and Control Scheme

7.6.1 *Assembly Line Topology* — This Standard presupposes the following characteristics.

- *Direct Panel Handoff Between Adjacent Equipment* — Equipment directly passes a Panel between adjacent equipment without separate Panel handling system.
- *Multiple Panel Tracks Between Adjacent Equipment* — Equipment may have multiple Tracks that transfer Panels between adjacent equipment.
- *Branch and Merge of Tracks* — Equipment may branch a Track to multiple Tracks or may merge multiple Tracks into one Track.
- *A Host per a Segment of a Production Line* — A host manages and controls the equipment and Panels in the Segment of the production line. Especially, the host starts a production of a Panel by preparing the Panel Data, communicating with the first equipment, and concludes the production of the Panel by gathering the Panel Data, communicating with the last equipment.

SUPERSEDED

Documents
Document Sharing Hub
Full document details: SEMI A2-0521

7.6.2 *Assembly Line Control Scheme* — This Standard provides the assembly line control scheme that uses the peer to peer communication channel called 'Line' defined in SEMI A1 for Vertical Communication (VC) and Horizontal Communication (HC).

7.6.2.1 *VC (Connection Between the Host and Equipment)* — The connection between the host (or upstream controller that may be deemed as the host) and equipment uses the following scheme.

- *Peer to Peer Connection* — Each equipment is connected by one 'Line' with the host.
- *Host-to-Equipment Coordination* — One full-duplex 'Line Information' channel in the 'Line', which communicates General Data (GD), is used.

7.6.2.2 *HC (Connection between Adjacent Equipment)* — The connection between adjacent equipment uses the following scheme.

- *Direct Connection* — Adjacent equipment are directly connected by one 'Line'.
- *Equipment-to-Equipment Coordination* — One full-duplex 'Line Information' channel in the 'Line', which communicates General Data (GD), is used for equipment-to-equipment coordination via the adjacent equipment.
- *Transfer of Panel and Panel Data* — A 'Track Information' channel in the 'Line' is used to transfer a Panel and its data (MD). One 'Track Information' channel is used for one Track.
- *The Host as the First or Last Equipment* — The host may logically act as the first or the last equipment in the production line and may originate or terminate GD or MD.

7.6.3 *Information Structure* — The following figure shows the image of the information structure of this Standard.

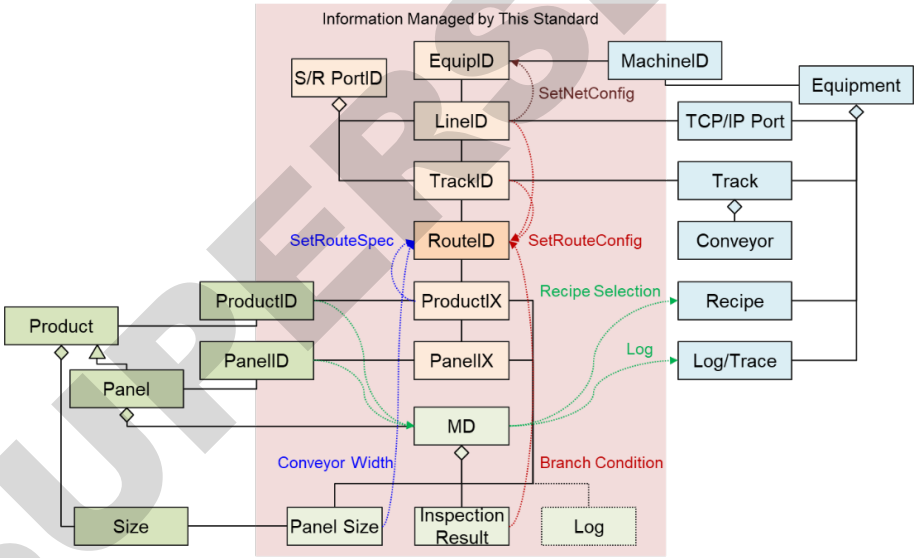

Figure 4
Image of the Information Structure

8 Requirements

8.1 *Numbering and Identification of Line and Track* — Lines and Tracks of each equipment shall be numbered and identified as defined below.

- *LineID* — Lines are numbered and identified from left front to right back starting with L0 per equipment.
- *TrackID* — Tracks are numbered and identified from front to back starting with T0 per Line.

SUPERSEDED

Documents Document Sharing Hub
Full document details: SEMI A2-0521

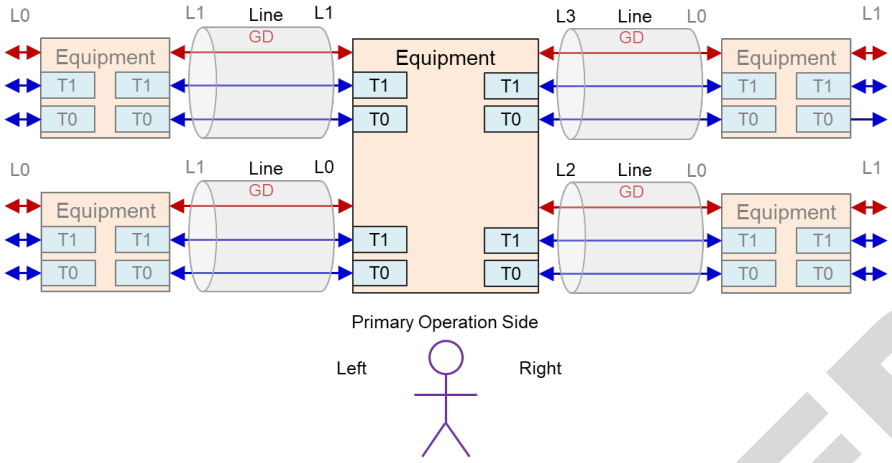

Figure 5
Numbering and Identification of Line and Track

8.2 *Network Connection Setup* — SEMI A1.1 compliant network connection is used for both Vertical (host-equipment) and Horizontal (equipment-equipment) connections.

8.2.1 *Vertical Connection* — The parameters required for host-equipment communication shall be set as below.

- *Items to be Set Manually* — IP address and TCP port number of the equipment.
- *Items to be Set Manually or by the Host* — EquipID and MachineID of the equipment.
- *Parameter Definitions* — See the table 'Equipment Parameter Definition' for required parameters.
- *Message to be Used* — The host uses SetNetConfig message to set EquipID and MachineID of the equipment. The host uses GetNetConfig message to get EquipID and MachineID of the equipment, and the equipment responds with CurrentNetConfig message.
- *When to Enable VC* — VC shall be enabled just after above setups are done.
- *ServerOrClient Setting* — ServerOrClient Setting shall be done per the definition in SEMI A1.1.

8.2.2 *Horizontal Connection* — The parameters required for equipment-equipment communication shall be set as below.

- *Items to be Set Manually or by the Host* — LineID, IPAddress, ServerOrClient, and TCPPort of every adjacent equipment.
- *Parameter Definitions* — See the table 'Equipment Parameter Definition' for required parameters.
- *Message to be Used* — The host uses SetNetConfig message to set network configuration of the equipment. The host uses GetNetConfig message to get network configuration of the equipment, and the equipment responds with CurrentNetConfig message.
- *When to Enable HC* — HC shall be enabled just after SetNetConfig is done.
- *ServerOrClient Setting* — ServerOrClient Setting shall be done per the definition in SEMI A1.1.

SUPERSEDED

Documents
Document Sharing Hub
Full document details: SEMI A2-0521

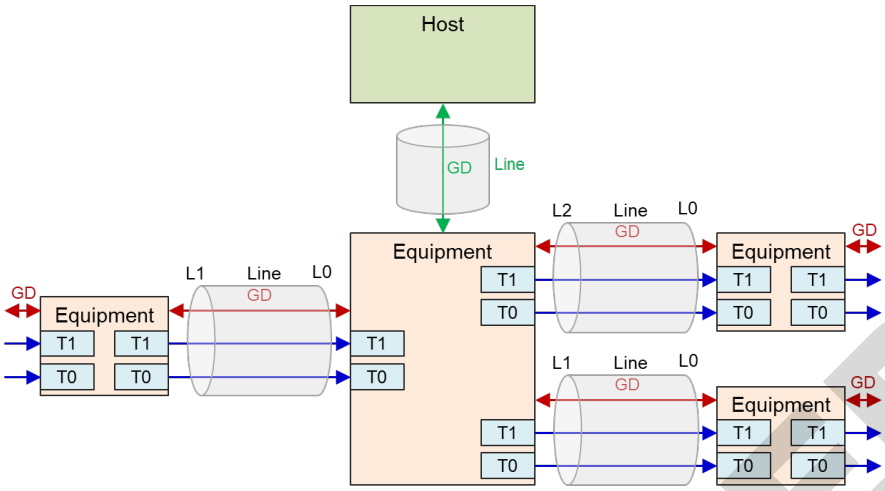

Figure 6
Network Connections of Equipment

8.2.2.1 *Exception Handlings of Horizontal Communication Messages* — The following procedures are applied when exceptions occur.

- *Sending Error* — When sending a Horizontal Communication message to the downstream equipment did not complete successfully, the message is put on hold, and operator assistance should be requested. When appropriate operator assistance (such as network check or power-on check of the downstream equipment) is completed, the message is resent to the downstream equipment.
- *Invalid Parameter* — When the received Horizontal Communication message contains invalid parameters, the equipment requests reports an error defined per the message without applying the message.

8.2.3 *Boundary Equipment Connection* — A boundary equipment, the first equipment and the last equipment in a Segment of a production line that is managed by single host, shall have additional communication paths to take care of the border of the flow connection.

- *For an Intra-Segment Flow Connection* — To initiate and terminate a loop of Flow Connection that is managed by the host, the first and the last equipment shall have a connection for Data Handshake to the host. This connection is done through the VC connection the equipment has, and the message threads for this purpose are distinguished by Application Code from other message threads.
- *For an Inter-Segment Flow Connection* — To communicate with an equipment in other Segment of a production line managed by other hosts, the first and the last equipment should have a connection for Data Handshake to the host. This connection is done through the VC connection the equipment has, and the message threads are distinguished by Application Code from other message threads.
- *Operator Interface Instead of Inter-Segment Flow Connection* — In the case the first or the last equipment does not have an external Line connection but is controlled by an operator, the equipment shall have an operator interface that is logically equivalent with the operation via the Flow Connection.
- *Host to Host Connection* — The hosts may have a direct Line connection for Data Handshake for direct communication.

SUPERSEDED

Documents Document Sharing Hub
Full document details: SEMI A2-0521

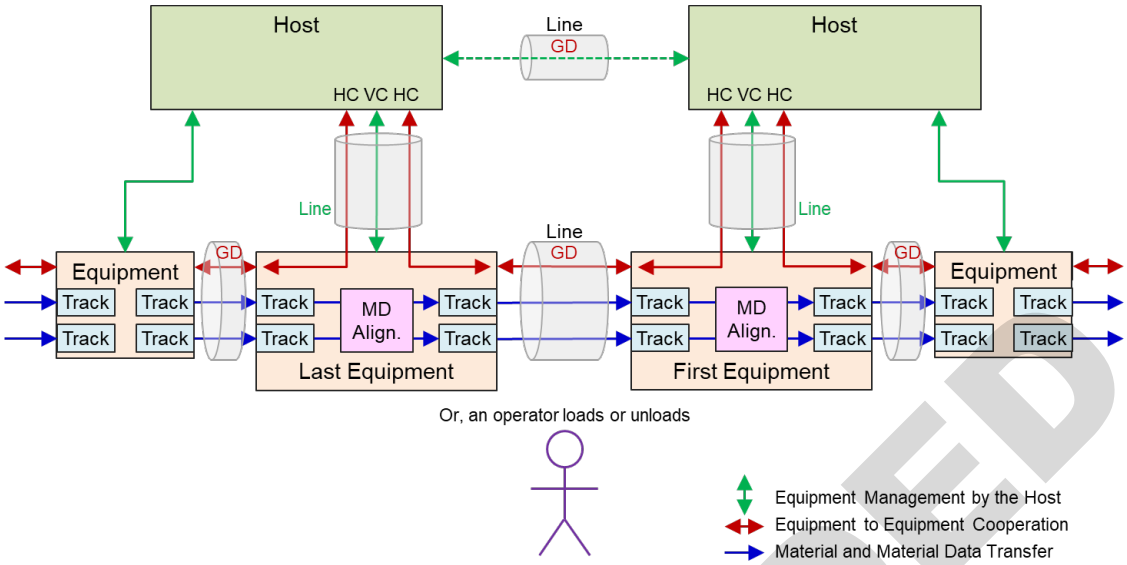

Figure 7
Network Connections of Boundary Equipment

8.2.3.1 *The First Equipment* — The first equipment performs the following items in conjunction with the host.

- *Inter-Segment HC Message Propagation from/to the Host* — The first equipment should propagate the inter-Segment HC messages from/to the host using the Line for VC connection.
- *Intra-Segment HC Message Propagation from/to the Host* — The first equipment shall propagate the intra-Segment HC messages from/to the host using the Line for VC connection to form a Flow Connection loop. A broadcast message from the host shall be propagated to the downstream equipment.
- *MD Reporting and Alignment* — The first equipment reports the MD that is received from upstream Segment to the host. Also, the first equipment aligns Panel and MD as below.
  - When the MD is directly applicable to the own Segment, the first equipment applies the MD.
  - When the MD is not directly applicable, the first equipment applies the MD adjusted and provided from the host (such as the case ‘a carrier of Panels’ to ‘single Panel’ conversion is required).
- *Loading by an Operator* — The first equipment receives a Panel and the Panel Data from an operator by interacting with the host in the logically similar way to the case the equipment receives them from the last equipment of the upstream Segment.

8.2.3.2 *The Last Equipment* — The last equipment performs the following items in conjunction with the host.

- *Inter-Segment HC Message Propagation from/to the Host* — The last equipment should propagate the inter-Segment HC messages from/to the host using the Line for VC connection.
- *Intra-Segment HC Message Propagation from/to the Host* — The last equipment shall propagate the intra-Segment HC messages from/to the host using the Line for VC connection to form a Flow Connection loop. A broadcast message from the upstream equipment shall be propagated to the host.
- *MD Reporting and Alignment* — The last equipment reports the MD that is received from upstream equipment to the host. Also, the first equipment aligns Panel and MD as below.
  - When the MD is directly applicable to the downstream Segment, the last equipment applies the MD.
  - When the MD is not directly applicable, the last equipment applies the MD adjusted and provided from the host (such as the case ‘single Panel’ to ‘a carrier of Panels’ conversion is required).

SUPERSEDED

Documents
Document Sharing Hub
Full document details: SEMI A2-0521

- *Unloading by an Operator* — The last equipment passes a Panel and the Panel Data to an operator by interacting with the host in the logically similar way to the case the equipment passes them to the first equipment of the downstream Segment.

8.3 *Route Management* — This Standard defines the following Route management function.

8.3.1 *Definition and Usage of Route* — Route is introduced to control the path of Panels through the production line.

- *Definition of Route* — Route is a logical path of Panels in the production line.
- *Setting of Route* — Route is set to each equipment by the host or operator prior to use the Route.
- *Use of Route* — Route is used by each equipment to control the paths of Panels.
- *Identification of Route* — Route is identified by RouteID.
- *Route and Track Relationship* — Multiple Routes may be assigned on the same Track as shown in the following figure.

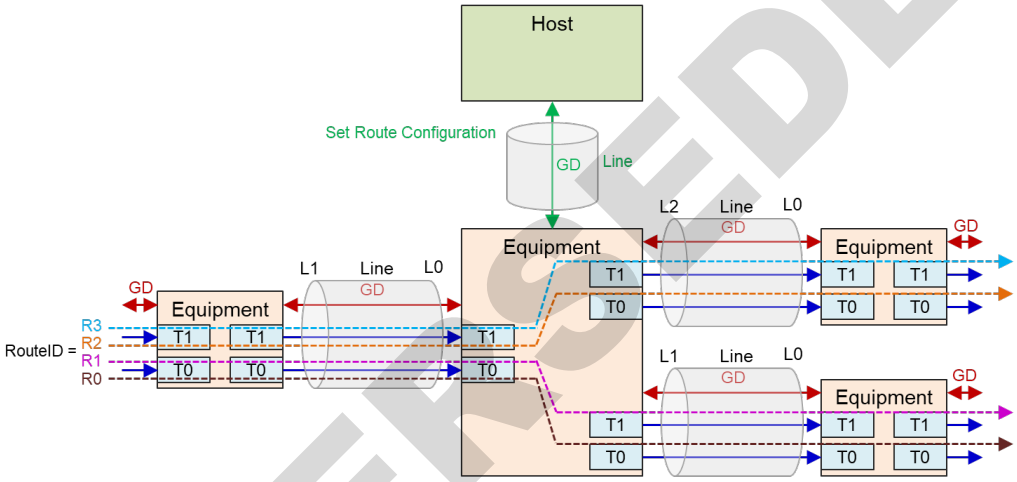

Figure 8
An Example Image of Equipment Connection and Route

8.3.2 *Route Configuration* — Route is configured in the following way.

- *How to Configure Route* — A Route configuration is done by setting identifiers of a Receive Port and a Send Port to a Route as shown in the following table. RCondition is also set to each Route.
- *Branch* — Multiple Routes that share the same ReceivePortID and have different SendPortIDs are used as a branch.
  - When the same ProductIX and ProductID are assigned to those Routes, RCondition is used to determine the Route to take.
  - When different ProductIX and ProductID are assigned to those Routes, RCondition is set to 'NS' and ProductIX or ProductID is used to determine the Route to take.
- *Merge* — Multiple Routes that have different ReceivePortIDs and share the same SendPortID are used as a merge. RCondition 'MG' is used to identify the SendPortID overlap is intended for merge.
- *Setting by the Host or an Operator* — The configuration setting of Routes is done, per equipment, by the host with SetRouteConfig message, or by an operator manually.

SUPERSEDED

Documents Document Sharing Hub
Full document details: SEMI A2-0521

Table 8 Route Configuration

IDs	RouteID	ReceivePortID		RCondition	SendPortID	
		LineID	TrackID		LineID	TrackID
Description	Identifier of a Route	Specify a Receive Port for the Route		Specify a routing condition to take the Route. Set 'NC' for fixed Routes.	Specify a Send Port for the Route	
		Identifier of an incoming Line	Identifier of an incoming Track in the incoming Line		Identifier of an outgoing Line	Identifier of an outgoing Track in the outgoing Line
Example	R0	L0	T0	OK	L1	T0
	R1	L0	T0	NG	L1	T1
	R2	L0	T1	O0	L2	T0
	R3	L0	T1	O1	L2	T1

8.3.3 *Route Specification* — The specification of each Route is determined in the following way.

- *Message to be Used* — A Broadcast message SetRouteSpec via HC is used to set Route Specification to all equipment in the production line.
- *Specification of Route* — RouteID is used to specify the Route to be set the Route specifications. In the case to set all Routes to the same conditions or Route is not individually managed, RouteID may be set to 'RX'.

Table 9 Route Specification

IDs	RouteID	Product Assignment		Panel Size (of the Product)		
		ProductIX	ProductID	PanelWidth	PanelLength	PanelThickness
Description	Identifier of a Route	Standardized short index of a Product	Customer defined identifier of a Product	Width of Panel specified by ProductIX	Length of Panel specified by ProductIX	Thickness of Panel specified by ProductIX
Usage	-	-	-	-	-	-
Conveyor width setting	-	Used as an index when PanelWidth is not directly set	-	Used when set.	-	-
Recipe selection (and preparations such as parts set)	-	Used as an index when ProductID is not directly set	Used when set.	-	-	-
Example	R0	P0	ProductID 0	PanelWidth 0	PanelLength 0	PanelThickness 0
	R1	P0	ProductID 0	PanelWidth 0	PanelLength 0	PanelThickness 0
	R2	P1	ProductID 1	PanelWidth 1	PanelLength 1	PanelThickness 1
	R3	P2	ProductID 2	PanelWidth 1	PanelLength 2	PanelThickness 2

8.3.3.1 *Timing to Set* — Route specification setting is done in the following timing.

- *Immediate Setup* — When MDReferMode is set to M0, SetRouteSpec message immediately sets the Route specifications.
- *Prepare for Setup* — When MDReferMode is set to M1 or M2, SetRouteSpec message demands preparation of to set the Route specifications. Actual change shall be done upon Panel arrival based on its MD.

8.4 *MD Reference Modes* — There are three MD reference modes determined by MDReferMode flag.

- *MD Reference Mode Setup* — MDReferMode flag is set by the Broadcast message SetMDReferMode via HC.

SUPERSEDED

Documents
Document Sharing Hub
Full document details: SEMI A2-0521

- *When to Set MD Reference Mode* — The MD Reference Mode shall be set or changed when no Panel is in the production line.
- *Where to Initiate the Broadcasting* — The broadcasting of SetRouteSpec message is initiated by the host through the most upstream equipment in the production line.

Table 10 MD Reference Modes

MD Reference Mode	*Mode 0 (M0)*	*Mode 1 (M1)*	*Mode 2 (M2)*
Definition	MD is updated with available data at each equipment. MD is transferred through equipment but NOT used for production line control purposes.	MD is updated with Product type information such as ProductIX, ProductID, and Panel sizes. MD is transferred through equipment and used for: ➢ Product control	MD is updated with individual Panel information such as PanelIX and PanelID in addition to product type information. MD is transferred through equipment and used for: ➢ Product control ➢ Individual Panel control
Use of MD	-	-	-
PanelIX	Not use	Not use	May use
PanelID	Not use	Not use	Use
ProductIX	Not use	May use	May use
ProductID	Not use	Use	Use
PanelWidth	Not use	Use	Use
InspectionResult	Not use	May use	May use
Route Specification Setting	-	-	-
Done by	SetRouteSpec message	MD	MD
Recipe selection	ProductIX (or ProductID)		
Conveyor width control	PanelWidth, PanelLength, and PanelThickness, or the same set of parameters indexed by ProductIX (or ProductID).		
Discharge of Panels from the Route for the setting	Required	Not Required	Not Required
Setup change timing	At once upon the message reception.	Upon arrival of a Panel to each equipment.	Upon arrival of a Panel to each equipment.
Reflection timing of SetRouteSpec message	-	-	-
After Purge	Applicable	Applicable	Applicable
Upon Arrival	Not applicable	Applicable	Applicable

SUPERSEDED

Documents Document Sharing Hub
Full document details: SEMI A2-0521