SEMI C93-0522
GUIDE FOR DETERMINING THE QUALITY OF ION EXCHANGE RESIN USED IN POLISH APPLICATIONS OF ULTRAPURE WATER SYSTEM

This Standard was technically approved by the Liquid Chemicals Global Technical Committee. This edition was approved for publication by the global Audits and Reviews Subcommittee on November 4, 2021. Available at www.semiviews.org and www.semi.org in May 2022; originally published February 2016; previously published June 2020.

NOTICE: Paragraphs entitled 'NOTE:' are not an official part of this Standard or Safety Guideline and are not intended to modify or supersede the official Standard or Safety Guideline. These have been supplied by the global technical committee to enhance the usage of the Standard or Safety Guideline.

NOTICE: The section symbol (§) is used to reference a numbered section, paragraph, or header and all subordinate paragraphs, headers, and embedded material (i.e., EXCEPTIONs, lists) therein. The paragraph symbol (¶) is used to reference a particular numbered paragraph and embedded material therein. When duplicated (i.e., §§ and ¶¶) the symbols are used to reference more than one section or paragraph, respectively.

SUPERSEDED

1 Purpose

1.1 This Standard describes a Guide for analysis of virgin high-purity ion exchange (HPIX) resin suitable for use in ultrapure water (UPW) polish applications. Further information regarding UPW systems can be found in SEMI F61.

1.2 The Guide focuses on analysis of HPIX resin used in UPW. This Guide recommends parameters and test conditions that will minimize the effect of contamination from the resin on the manufacturing process.

1.3 The purpose of the Guide is to avoid prolonged rinse-up of the new HPIX when it is loaded into ion exchange (polish) tanks. The Guide results should be representative of full-scale applications.

1.4 This Guide was developed to support the proactive quality management approach. It assumes that some of the critical trace contaminants (i.e., particles of the size of 5 to 10 nm range or low PPQ levels of metals) cannot currently be effectively measured in UPW. This Guide supports the approach by off-line measurement of the contaminants using best available techniques available in the laboratory setting. This Guide does not require large volumes of resin in order to determine resin quality.

2 Scope

2.1 This Guide includes recommendations for virgin HPIX resin sample handling and test conditions.

2.2 This Guide provides an example of the performance of state-of-the-art resins; the data was obtained following this Guide. However the quality criteria are expected to be determined by the end user based on the user-specific needs.

2.3 It is the intent of this Guide to focus on virgin HPIX resin. The quality parameters assessed, as recommended by this Guide, include quantitative measures of particle contribution, metallic contribution, organics contribution, residue after evaporation (RAE) (nonvolatile residue [NVR]), and broken beads content.

2.4 The Guide takes the wetted-stream performance of virgin HPIX resin into consideration and reflects the current manufacturing processes of the resin manufacturers.

2.5 Leach-out procedures referenced within this Guide provide values for both static and dynamic conditions. While the static leach-out testing is recommended to verify the quality of the resin normally used in the facility, the dynamic testing is recommended when conditions closer to mimicking the actual mixed-bed operation. This will help with the selection of an appropriate resin. Choosing either a dynamic leach test or a static leach test is determined by the end user needs. Dynamic leach tests should be used to estimate the rinse-up flush volume. Static leach tests should be used for quality assurance when baseline virgin resin quality has already been established (otherwise use the dynamic leach test to estimate the rinse-up time).

2.6 Only mixed virgin HPIX resin is used for the testing within this Guide. When the resin is supplied in non-mixed form (i.e., anionic and cationic), a mixed sample is used for analysis.

Documents Document Sharing Hub
Full document details: SEMI C93-0522

2.7 This Guide assumes that the virgin HPIX resin tested is representative of the virgin HPIX resin to be loaded in the mixed-beds tanks. The resin shelf life, storage, and delivery conditions should be taken into account when planning the testing.

2.8 This Guide applies to virgin HPIX resin as well as point of use HPIX modules intended for use in semiconductor manufacturing equipment and their ancillary equipment.

2.9 This Guide includes recommended analytical testing that the end user can perform; the end user should determine which analyses are required and whether to conduct optional testing.

NOTICE: SEMI Standards and Safety Guidelines do not purport to address all safety issues associated with their use. It is the responsibility of the users of the Documents to establish appropriate safety and health practices, and determine the applicability of regulatory or other limitations prior to use.

3 Limitations

3.1 This Guide applies solely to virgin HPIX resin testing. Quality and performance of the associated equipment (i.e., HPIX beds, piping, piping components) are not included in the Guide.

3.2 Virgin HPIX resin tested by following this Guide is intended for use in the polishing system of (UPW) systems only (i.e., located downstream the UPW tank). These testing conditions may exceed the needs of resin used in primary mixed beds and other less critical applications.

3.3 The Guide is designed to assess contamination from the resin in an 'as-received' state; onsite resin handling may add contaminants. The effects of the onsite handling are beyond the scope of this Guide, but should be considered by the supplier or user.

3.4 Performance of premixed resin vs. mixed in the lab is expected to be different. The sample should be prepared (i.e., mixed) in the same way it is done for the actual application (premixed by manufacturer vs. mixed onsite).

3.5 This Guide is not intended to supersede customer specifications.

3.6 Virgin HPIX resin samples tested under the conditions recommended by this Guide may vary in their performance from the resin used in the actual UPW system. Resin inconsistency should be addressed with the resin supplier or by conducting a statistical analysis of the resin quality data.

3.7 The accuracy of the data generated by this Guide is limited to the accuracy of the analytical techniques used to measure resin quality.

3.8 Tolerances in the figures used in the Guide (such as flow rate, concentration, etc.) are ±10% unless otherwise stated.

3.9 This Guide application is limited to the ambient temperature UPW system. Other applications, such as hot UPW systems or different treatment solvent have not been considered in this Guide.

3.10 The reference data provided in Appendix 2 is representative for 2019 state-of-the-art resin quality and may not be fully representative for future state-of-the-art resin.

3.11 Limited experience and data are currently available in application of this Guide. Additional reproducibility studies may need to be conducted by the end user when defining performance criteria for the resin tested.

3.12 This Guide recommends a simplified option of the static leach test vs. dynamic leach test, mimicking actual polish mixed operation. Although data in Appendix 2 suggested that static leach test may be representative for the analysis of the resin performance under dynamic conditions, the choice of the testing should take into account the fact of the limited amount of data collected by the date of publication of this Guide.

4 Referenced Standards and Documents

4.1 *SEMI Standards and Safety Guidelines*

SEMI E49 — Guide for High Purity and Ultrahigh Purity Piping Performance, Subassemblies, and Final Assemblies

SEMI F57 — Specification for Polymer Materials and Components Used in Ultrapure Water and Liquid Chemical Distribution Systems

SUPERSEDED

Documents
Document Sharing Hub
Full document details: SEMI C93-0522

SEMI F61 — Guide for Ultrapure Water Systems used in Semiconductor Processing

4.2 *Federal Standards*[1]

FED STD 209E — Airborne Particulate Cleanliness Classes in Cleanrooms and Clean Zones

4.3 *ISO Standards*[2]

ISO 14644-1 — Cleanrooms and Associated Controlled Environments – Part 1: Classification of Air Cleanliness by Particle Concentration

4.4 *Other Documents*

International Technology Roadmap for Semiconductors (ITRS)[3]

NOTICE: Unless otherwise indicated, all documents cited shall be the latest published versions.

5 Units

5.1 Parts per million (ppm) is equivalent to µg/mL or mg/L, where 1 L approximately equals 1 kg.

5.2 Parts per billion (ppb) is equivalent to ng/mL or µg/L, where 1 L approximately equals 1 kg.

5.3 Parts per trillion (ppt) is equivalent to pg/mL or ng/L, where 1 L approximately equals 1 kg.

5.4 Micrometer is a unit of length equal to one millionth of a meter, or one thousandth of a millimeter.

6 Terminology

NOTE 1: General terms for UPW systems can be found in SEMI F61.

6.1 General terms and acronyms used in this Standard are listed below and may be defined in SEMI F61.

6.2 *Abbreviations and Acronyms*

6.2.1 *HPIX* — high-purity ion exchange

6.2.2 *LC-OCD* — liquid chromatography with organic carbon detector

6.2.3 *LNS* — liquid nano-particle sizing system

6.2.3.1 *Discussion* — An example of a particle size distribution analyzer (PSDA) used for the validation testing, refer to results in Appendix 2.

6.2.4 *LPC* — laser particle counter

6.2.5 *N-CPC* — nebulization with condensation particle and particle precursor counter

6.2.6 *NRM* — nonvolatile residue monitor

6.2.7 *NVR* — nonvolatile residue

6.2.7.1 *Discussion* — NVR is also called residue after evaporation (RAE).

6.2.8 *PFA* — perfluoroalkoxy

6.2.9 *PSDA* — particle size distribution analyzer

6.2.10 *PVDF* — polyvinylidene fluoride

6.2.11 *TOC* — total organic carbon

6.2.12 *UPW* — ultrapure water

[1] U.S. General Services Administration, 1800 F Street, NW, Washington DC 20405, USA; Telephone: +1.800.488.3111, http://www.gsa.gov

[2] International Organization for Standardization, ISO Central Secretariat, 1, ch. de la Voie-Creuse, CP 56, CH-1211 Geneva 20, Switzerland; Telephone: +41.22.749.01.11, Fax: +41.22.733.34.30, http://www.iso.org

[3] International Technology Roadmap for Semiconductors, http://www.itrs2.net/

SUPERSEDED
Documents Document Sharing Hub
Full document details: SEMI C93-0522

6.3 *Definitions*

6.3.1 *background* — the contaminant concentrations in the test system reported by analyzers, such as a particle size distribution analyzer (PSDA), nonvolatile residue monitor (NRM), total organic carbon (TOC), and others. Background includes contaminant contributions from the ultrapure water (UPW) and the test equipment components.

6.3.2 *delta measurement* — the ultrapure water (UPW) contaminant concentration difference between the inlet of the resin column and the outlet of the resin column.

6.3.3 *dynamic leach test skid* — the system providing resin-evaluation test analysis. The test skid includes piping, resin column, flow meters, pressure gauges, valves, regulators, sample ports, etc. Figure 1 provides illustration of the skid.

6.3.4 *virgin HPIX resin* — an unused, high purity ion exchange (HPIX) resin that has not been regenerated.

7 Dynamic Leach Test Skid Configuration

7.1 The dynamic leach test skid should be made of high-purity components, meeting SEMI F57 quality requirements. Figure 1 presents the recommended configuration of the skid. The ion exchange column is made of polyvinylidene fluoride (PVDF) or perfluoroalkoxy (PFA), with PFA tubing connecting the column to the UPW system and analytical equipment.

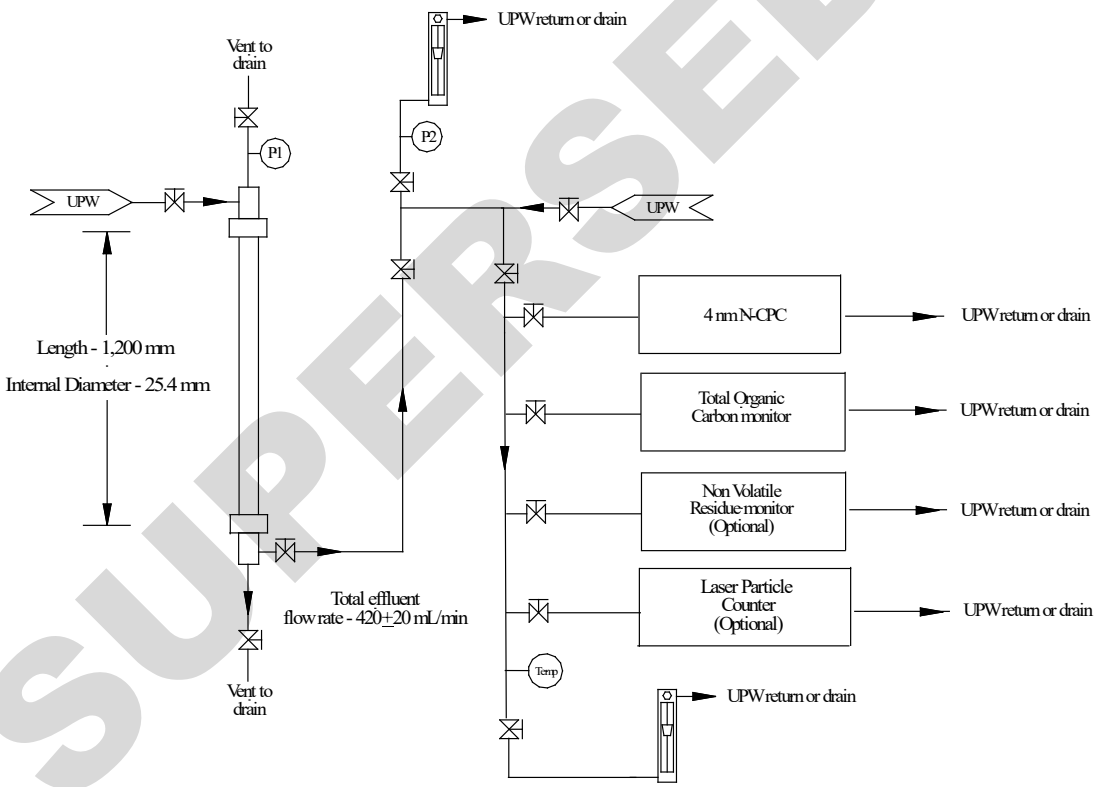

Figure 1
General Test Schematic Diagram for Dynamic Leach Test

7.2 Minimum operating pressure should be sufficient to feed the instruments downstream of the ion exchange column, typically 172 to 310 kPA (25 to 30 psig). The pressure gauges and flow meters should be installed downstream or side stream to avoid contamination. Pressure on the feed side to the column should be 207 to 310 kPa (30 to 45 psig) to reduce potential micro bubble formation. The high-pressure limit depends upon the materials of construction (for safety and leak prevention).

SUPERSEDED

Documents
Document Sharing Hub
Full document details: SEMI C93-0522

7.3 Ultrapure, low-particle, low-total organic carbon (TOC), low-shedding piping systems should be used in all wetted flow paths from the UPW source to the dynamic leach test skid to ensure that adequate water quality is maintained. Consider the recommendations within SEMI E49 when designing and assembling the system.

7.4 Protect the test system from excessive vibration, which could lead to high particle-background counts.

7.5 Minimum operating pressure downstream of the dynamic leach test skid should be 138 kPa (20 psig) during testing to avoid gas bubbles.

7.6 The UPW should be in compliance with the following minimum guidelines:

7.6.1 *Temperature* — 23 ± 5°C (77 ± 9°F).

7.6.2 *Resistivity* — ≥18 MΩ·cm at 25°C (77°F).

7.6.3 *TOC* — <1 ppb, with lower background levels beneficial for TOC analysis.

7.6.4 *NVR* — <0.2 ppb (optional).

7.6.5 *Maximum Recommended Particle-Concentration Background Level* — <1 particle/mL (≥0.05 µm). Background particle levels measured by particle size distribution analyzer (PSDA) are dictated by the resin performance expectations (refer to Appendix 2, Figure A2-2).

7.6.6 The test stand will be operated in a clean working environment (ISO Class 9, per current revision of ISO 14644-1, equivalent to FED STD 209E Room Air), or better. End users requiring more exacting testing should consider following more stringent testing requirements.

7.6.7 Instrumentation, including flow meters, pressure gauges/transducers and temperature sensors, should be calibrated in accordance with the manufacturers' procedures and frequency.

7.6.8 Bubbles cause metrology errors; orient the test column and the plumbing between the components under test to limit bubble entrapment. Position the ion exchange column vertically and vent the test skid to prevent gas accumulation and bubble formation. Provisions should be included in the test stand to capture and divert bubbles before they enter the instrumentation supply lines.

NOTE 2: UPW flow through the ion exchange column should be from the top to the bottom to prevent resin separation.

8 Sample Recommendations

8.1 Test a representative ion exchange virgin resin sample from the batch under consideration.

8.2 To take a virgin resin sample from the drums at the end user location, it is recommended to follow this procedure:

8.2.1 Avoid construction and other maintenance activities in the area where the sample is taken.

8.2.2 Rinse the outside of the drums with high purity water before opening to remove contamination collected during transport and storage. Allow the water to drip off the drums.

8.2.3 Don clean room suit and low-zinc gloves.

8.2.4 Prepare clean bags for the resin sampling and shipping. Use double-bagged packaging (the inner bags should be qualified for low background level of particles, while the outer bags should have low gas permeability).

8.2.5 Take resin from a previously unopened drum.

8.2.6 Open a representative drum and open the protective bags inside the drum.

8.2.6.1 If resin prepared for testing is supplied from different batches or was stored under different conditions, you may need to test more than one sample.

8.2.6.2 If the amount of resin in a single drum is <10% of the total amount of the resin to be used, you may need to sample more than one drum in order to obtain representative results.

8.2.7 Sample resin immediately after you open the drum.

8.2.7.1 Take the sample from the top of the drum to prevent excess liquid from being taken with the sample.

8.2.7.2 Remove approximately 5 cm (2 in.) of the upper resin layer.

SUPERSEDED

Documents Document Sharing Hub
Full document details: SEMI C93-0522

8.2.7.3 Take 1 L of the resin sample for a static leach test and 1.2 L for a dynamic leach test.

8.2.7.4 Minimize exposure of the resin sample to ambient contamination.

8.2.7.5 Use gentle motion to avoid damaging the resin beads.

8.3 Place the resin in a prepared clean bag and seal the bag.

8.4 Wrap the resin sample in bubble wrap to protect it during shipping.

8.5 Place the resin sample in a cooler and ship to the lab using fast, direct delivery (do not exceed one week in shipment). Add 'FRAGILE' sticker.

NOTE 3: Resin sample handling and packaging may impact the test results. Samples submitted for testing should reflect standard practices of handling and packaging by the resin manufacturer in accordance with the typical manufacturing processes.

9 Test Methodology

9.1 *Leach-Out Parameters*

9.1.1 This Guide does not provide specific quality requirements for leachable parameters. The end user should define quality requirements based upon the process-specific sensitivity to contamination, the ion exchange polish system design, and the data provided in Appendix 2. The results in Appendix 2 are based on the benchmarking study and indicate the actual range of performance of typical resins used in ion exchange polish applications.

9.1.2 Success criteria considerations for TOC and particle release. Contamination by organic compounds causes silicon oxidation. It also affects etching uniformity, wafer and mask cleaning, adhesion of the resist, gate oxide breakdown voltage, epitaxial growth, atomic layer deposition, and chemical vapor deposition of silicon nitride or other thin film deposition.

9.1.2.1 Loading virgin HPIX resin for applications with tight target levels for TOC and particles poses risk to the final UPW quality.

9.1.2.1.1 In a high volume manufacturing facility where a number of parallel polish mixed beds are used, TOC contribution of less than 0.3 ppb is considered insignificant if the resin is replaced in only one of the parallel polish tanks. The UPW from additional tanks dilutes the TOC from the tank with new virgin resin.

9.1.3 Critical particle size is specific to the end user's manufacturing process and technology. Particles released by the virgin HPIX resin can contaminate devices and critical surfaces as well as disrupt the photolithography process, thereby decreasing yields.

9.1.4 Based upon the UPW particle concentration target (in particles per liter) and the assumption that the final filter should provide some particle retention, the end user should estimate the acceptable particle concentration for the polish tank effluent. If the resin change-out is spread over a year particle leach out from additional tanks dilutes the particle concentration from the tank being measured.

9.1.5 Metal leach consideration also depends upon the end user metal specifications. Metallic contamination can alter the electrical properties of microelectronic devices and corrode or etch microelectronic devices and critical surfaces during fabrication, causing immediate or future device failure.

9.1.6 For high purity applications susceptible to metals contamination, the end user should conduct an HCl leach using quality criteria based on Appendix 2 'best in class' performance. For less critical applications, it is recommended that UPW extraction is used with all metals to be below the detection limits, as indicated in Appendix 2.

9.1.7 One week rinse time is considered the maximum acceptable time period based on the common industry practice.

NOTE 4: Using the performance quality criteria, 'best in class' HPIX resin is recommended where tightest quality is required (per Appendix 2). Application of stringent requirements may affect schedule and cost.

NOTE 5: Background is measured in the static leach test containers or when UPW flows through the dynamic leach test skid (after rinsed and cleaned components have reached a steady-state of background contamination).

NOTE 6: Useful when the inlet analyte concentration is too unstable during the test period to allow the proper use of an average background measurement. Delta Measurement can be achieved by using two calibrated analyzers that have had their responses matched on the same water sample.

SUPERSEDED

Documents
Document Sharing Hub
Full document details: SEMI C93-0522

9.2 *Other Parameters*

9.2.1 The following recommendations are provided for estimating the whole bead content.

NOTE 7: If the virgin HPIX resin does not meet end user quality requirements, the end user should consult the resin supplier.

9.2.1.1 Whole bead content: the virgin ion exchange resin is considered acceptable for use in polish tanks if the resin contains >90% of whole and non-cracked beads and >95% of unbroken beads.

9.3 *Particle Contribution Test*

9.3.1 UPW is used for the particle contribution testing. The following instruments are employed:

9.3.1.1 In situ nebulization with condensation particle and particle precursor counter (N-CPC)

9.3.1.2 Optional: In situ nonvolatile residue monitor (NRM) (if most of the NVR = particles)

9.3.1.3 Optional: In situ laser particle counter (LPC)

9.3.1.4 Grab Sample PSDA

9.3.2 The Dynamic Leach Test evaluates particle contribution performance of the virgin ion exchange resin in a continuous flushing mode and provides an indication of the volume of UPW required to bring particle levels to meet the end user's requirements.

9.4 *Organic Contamination*

9.4.1 The measurement of TOC is a common water quality screening method for organic materials; maximum TOC levels should be <0.5 ppb but the actual effects of the individual compounds can depend on the structure of the molecules, and the semiconductor manufacturing processes. Any organic compound in UPW is a potential nutrient to increase bacterial growth. Methods other than measuring TOC, such as liquid chromatography with organic carbon detector (LC-OCD), may be needed to assess the identification of individual organic contaminants.

9.4.1.1 The TOC analyzer should correctly measure the organic Carbon contained in organic compounds that also include Nitrogen, Sulfur, Phosphorus, and Chlorine in their structures.

9.4.1.2 Use LC-OCD to identify either unusual organic compounds or those compounds that are present in unusually high concentrations. Refer to the example of an LC-OCD chromatogram shown in Appendix 2.

9.4.1.3 Use the static leach test to evaluate virgin ion exchange resin quality, using Appendix 2 data for reference.

9.4.1.4 Use the dynamic leach test to evaluate the TOC rinse-up volume, this is effective when done in conjunction with particle testing. If the source UPW TOC level fluctuates during the test period, a delta measurement between the column inlet and outlet for the TOC may be required.

NOTE 8: The value of TOC measurement as part of the dynamic leach test should be evaluated by the end user, considering actual UPW TOC specification. If the TOC specification is low (0.5 ppb or less), the laboratory requirement of a low signal to noise ratio may not be attainable. In such a case, a static leach test is recommended as a gross reality check.

9.4.2 The temperature of virgin ion exchange resin during a static leach test should be 40 ± 3°C. A temperature specification is used to achieve comparable data for ion exchange resin and components and is not indicative of service temperatures.

9.4.3 Report measured values of TOC in micrograms per liter of dry resin (µg/g). The procedure for determining the moisture content and converting g resin tested to g dry resin is provided in ¶¶ 11.2.1.8 through 11.2.1.8.3. Detection limits (also defined in µg/g) should be reported for all measured values of TOC.

NOTE 9: The static leach test using UPW, even one of a 15-hour duration, has limitations. The values measured using a static leach test do not directly relate to the trace contaminant values which could be present in a flowing stream of liquid. Virgin ion exchange resin quality can be defined using the correlation studies for dynamic and static leach tests shown in Appendix 2.

9.4.4 *Metallic Contamination Test*

9.4.4.1 Metallic contamination specifications and testing may be needed for ion exchange virgin resin samples tested. It is particularly important for UPW applications where sensitivity to trace metals is high.

9.4.4.2 Virgin HPIX resin should conform to the end user's specifications. Refer to Appendix 2 for information on the metal extractable.

SUPERSEDED

Documents Document Sharing Hub

Full document details: SEMI C93-0522