SEMI D35-1103 (Reapproved 0709)
TEST METHOD FOR MEASUREMENT OF COLD CATHODE FLUORESCENT LAMP (CCFL) CHARACTERISTICS

This Standard was technically approved by the Flat Panel Display – Color Filter & Optical Elements Global Technical Committee. This edition was approved for publication by the global Audits and Reviews Subcommittee on May 13, 2009. Available at www.semi.org in July 2009; originally published November 2003.

NOTICE: This Standard or Safety Guideline has an Inactive Status because the conditions to maintain Current Status have not been met. Inactive Standards or Safety Guidelines are available from SEMI and continue to be valid for use.

1 Purpose

1.1 The purpose of this Document is to standardize the method for measurement of electrical and optical characteristics of cold cathode fluorescent lamp (CCFL).

2 Scope

2.1 This method is to be used by CCFL suppliers and users to evaluate quality of products as well as items under development.

2.2 This method shall be used in general for CCFL to measure the initial characteristics of CCFL (single item) and its reliability after tests, and to carry out quality inspection for incoming and outgoing CCFLs.

NOTICE: SEMI Standards and Safety Guidelines do not purport to address all safety issues associated with their use. It is the responsibility of the users of the Documents to establish appropriate safety and health practices, and determine the applicability of regulatory or other limitations prior to use.

3 Referenced Standards and Documents

3.1 *IEC Standard*[1]

IEC 60050 (845) — Lighting, Section 1: Radiation, Quantities and Units, 3: Colorimetry

3.2 *JIS Standard*[2]

JIS Z 8113 — Lighting vocabulary

NOTICE: Unless otherwise indicated, all documents cited shall be the latest published versions.

4 Terminology

4.1 *Abbreviations and Acronyms*

4.1.1 *CCFL* — cold cathode fluorescent lamp

4.2 *Definitions*

4.2.1 *effective emission area* — an area (length) in which a certain percentage of luminance against the luminance of a central part is maintained with almost even luminance distribution (LE[mm]).

4.2.2 *lamp current* — effective current inside the lamp (IL[mArms]). (The GND side shall be measured.)

4.2.3 *lamp voltage* — effective voltage across both ends (between two electrodes) of a lamp at rated lamp current (VL[Vrms]).

4.2.4 *lamp wattage* — a product of the lamp current, lamp voltage and a power factor. A reference value (W[Wrms]).

[1] International Electrotechnical Commission, 3 rue de Varembé, Case Postale 131, CH-1211 Geneva 20, Switzerland; Telephone: +41.22.919.02.11, Fax: +41.22.919.03.00, http://www.iec.ch

[2] Japanese Standards Association, 4-1-24 Akasaka, Minato-ku, Tokyo 107-8440, Japan; Telephone: +81.3.3583.8005, Fax: +81.3.3586.2014, http://www.jsa.or.jp

INACTIVE
Documents Document Sharing Hub
Full document details: SEMI D35-1103-0709R

4.2.5 *luminance stabilization time* — the time to reach a certain percentage of the luminance of a central part (Ts[min.]).

4.2.6 *stable discharge voltage* — effective voltage at lamp ends (between two electrodes) when a main discharge starts (Es[Vrms]).

5 Summary of Method

5.1 Warm up the measuring equipment for a specified period of time to stabilize (according to the instruction manual of measuring equipment).

5.2 Keep the lamp wall temperature of a CCFL and the ambient temperature in equilibrium. The ambient temperature shall be stable.

5.3 Set the CCFL on the measuring equipment.

5.4 Adjust the point of measurement (viewing angle), focus and distance.

5.5 Measure the stable discharge voltage.

5.6 Turn on the CCFL by applying a rated current and measure the lamp current when it is stable.

5.7 Measure the lamp voltage when the rated lamp current is stable.

5.8 Measure the luminance and chromaticity when the rated lamp current is stable.

5.9 Turn off the CCFL and remove it from the measuring equipment.

5.10 Refer to §§ 9.3 and 9.4 regarding the measurement of the effective emission area and luminance stabilization time.

6 Apparatus

6.1 *Electrical Apparatus* — Choose measuring equipment to use from the following devices and specify which devices were used, and also specify a measuring circuit, lighting frequency, rating of electrical wire and its length in the report. The electrical (and optical) characteristics of CCFL depend on the frequency of the lighting circuit.

6.1.1 *Power Supply* — For the lighting of CCFL, use a power supply unit that provides the substantial sinusoidal waveform and frequency of 50 to 60 kHz. Also, use the combination of a Stabilized DC power supply unit and an inverter, or a power supply unit designed specially as an integrated type (special purpose). The output voltage of either of them is variable but the variability shall not affect the measurement.

6.1.2 *Meter* — Use a meter that indicates true AC voltage values for measurement. The meter built in a special purpose power supply unit shall indicate true values as well.

6.1.3 *Circuit* — The circuit to measure electrical characteristics shall conform to Figure 1 or Figure 2.

6.1.4 Specify the ratings and lengths of electrical wires that connect each meter and lamp. Since the wires produce leakage current due to stray capacitance and the amount differs according to the lengths, set the wires as short as possible and do not bundle them.

6.2 *Optical Measuring Equipment* — Choose a measuring equipment to use from the following devices and specify which devices were used, and also specify the measuring distance, viewing angle, and ambient temperature in the report. The optical (and electrical) characteristics of CCFL depend on the ambient (lamp wall) temperature.

6.2.1 *Black Box for Measurement* — The black box used to measure shall be so designed that the lamp surface may not be affected by wind. The delustered black paint shall be applied on the inside of the box so that it may not be affected by the background color or reflected light when the luminance is measured. In addition, in order not to be affected by stray capacitance, non-conductive materials shall be used. For the installation of a CCFL in the box, a fixing method shall be employed for avoiding the impact to the lamp wall temperature distribution at lighting.

INACTIVE

Documents
Document Sharing Hub
Full document details: SEMI D35-1103-0709R

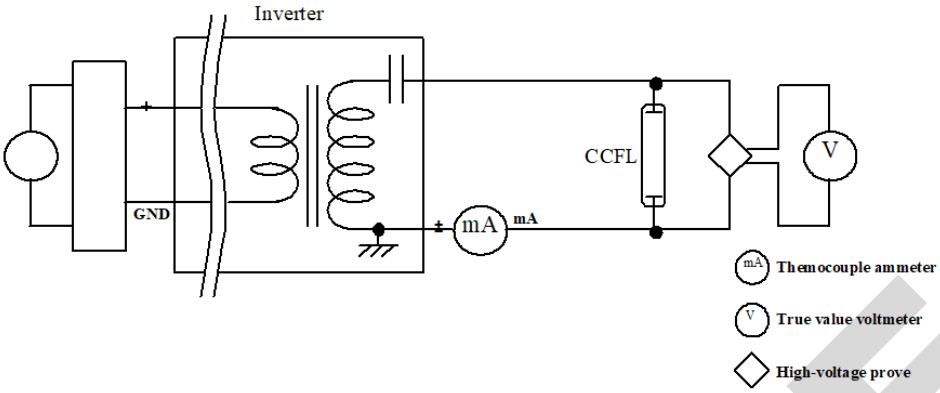

Figure 1
Combination of Stabilized DC Power Source and Inverter

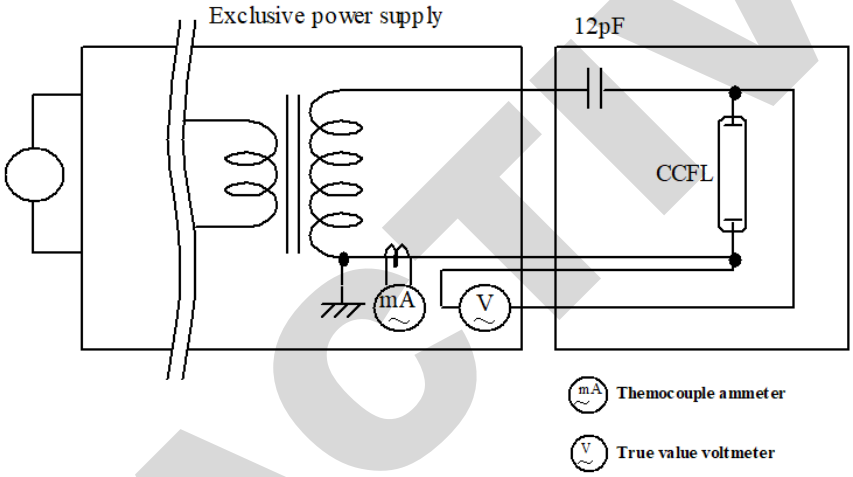

Figure 2
Exclusive Power Supply

6.2.2 *Meter* — Use a spectroradiometer or colorimeter to measure the luminance and chromaticity. Keep the spectroradiometer under control of calibration system with the meter of national standard and traceability. Calibrate the colorimeter in such a way that it can reproduce the luminance value of a master CCFL obtained by a calibrated spectroradiometer. Since each colorimeter has the instrumental error and changes with the passage of time, the calibration is necessary for daily use. For the calibration, a master CCFL, which has the emission spectrum value close to that of a CCFL to be measured, shall be used.

6.2.3 *Diagram for Measurement* — The diagram for optical measurement shall conform to Figure 3.

7 Measurement Conditions

7.1 The place for measurement shall be kept at 25°C ± 2°C for ambient temperature and 30% to 85%RH. The temperature fluctuation shall be within 1°C and if the temperature is specified, the measurement shall be carried out at such temperature. There shall be no wind or vibration that may affect the measurement.

7.2 For the measurement of luminance and chromaticity, arrange the situation where ambient reflected light may not affect it or such can be ignored.

INACTIVE

Documents Document Sharing Hub
Full document details: SEMI D35-1103-0709R

7.3 For the measurement of voltage, points to be measured shall be specified in circuit diagrams. Measured values may vary by the impact of ballast capacitor or probe based upon whether the points measured are located at an inverter transformer side or a lamp side (or located at front or rear side of ballast capacitor).

7.4 The electrostatic capacity of a high voltage probe used to measure a voltage shall be so small that the impact to the probe by leakage current may be less and it shall be specified.

8 Test Specimen

8.1 Use a CCFL in which the wall temperature and ambient temperature are kept in equilibrium before lighting. Especially when measuring the stable discharge voltage again after the first measurement, carry out after the lamp has been in equilibrium on both temperatures, the lamp wall temperature and ambient temperature.

8.2 Fix a CCFL horizontally along its long side on the jig of the above-mentioned equipment and this method shall not affect the temperature distribution on the wall. The measured point shall be measured in the air.

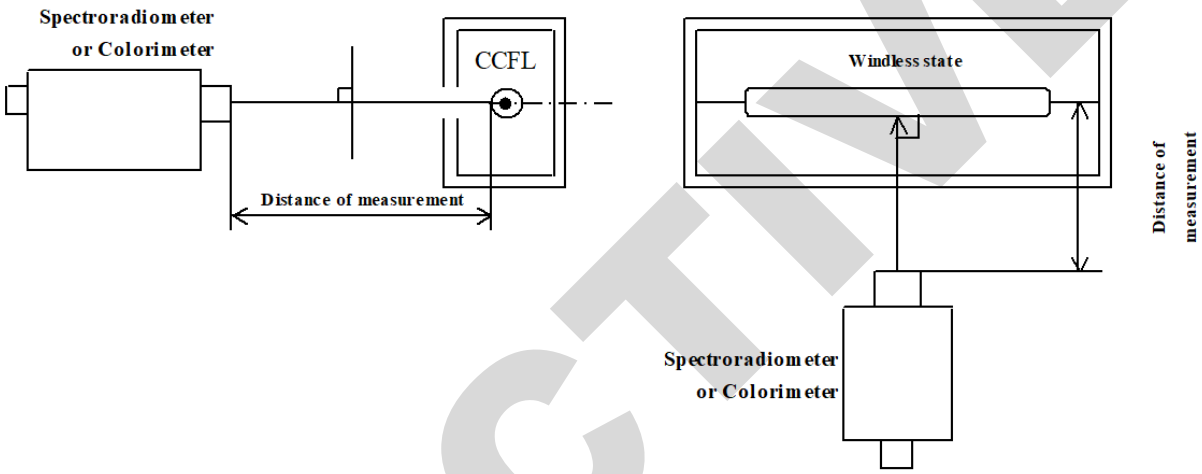

Figure 3
Optical Characteristics Measurement

9 Procedure

9.1 *Measurement of Electrical Characteristics*

9.1.1 *Measurement of Stable Discharge Voltage* — Apply zero or very low voltage to the both ends of a lamp (between two electrodes) and increase the voltage gradually (slide-up). The lamp starts to discharge after the voltage reaches a certain value. Furthermore, increase the voltage gradually (slide-up) and measure the potential difference between the lamp ends (electrodes) as a stable discharge voltage when a main discharge starts.

9.1.2 *Measurement of Lamp Current* — Adjust the output voltage of power supply unit to gain a specified lamp current. Measure the lamp current at GND terminal when it becomes stable at a specified value. Record the preset voltage of the power supply as well. (Refer to Figure 1 or Figure 2.)

9.1.3 *Measurement of Lamp Voltage* — Measure the potential difference between both ends (electrodes) of a lamp as a lamp voltage when the lamp current becomes stable at a specified lamp current. If the lamp current is affected when a probe is connected, adjust the lamp current to make it a specified lamp current. Measure the lamp current after it becomes stable.

9.1.4 *Lamp Wattage* — It is defined as a product of lamp current, lamp voltage and power factor ($W = VL \times IL \times \cos\theta$) and expressed as a reference value. When the phase difference between the lamp current and lamp voltage can be ignored and if such situation is specified, the product of the lamp current and lamp voltage ($W = VL \times IL$) may be expressed as a reference value.

INACTIVE

Documents
Document Sharing Hub
Full document details: SEMI D35-1103-0709R

9.2 *Measurement of Optical Characteristics*

9.2.1 *Point of Measurement* — The point is the side surface of a lamp, which is within the range of viewing angle (black circle) of a measuring instrument. The area of measurement is the central part of the lamp. The point of measurement shall be so small relatively to the inner diameter of the lamp that the dislocation of the point may not vary the luminance and chromaticity. The point of measurement is a cylindrical surface but it could be regarded as a plain surface due to the smallness (see Figure 5). The dispersion due to dislocation of a point of measurement is smaller within the range that is less than or equal to 50% of the inner diameter. The luminance decreases in the other range.

9.2.2 *Distance of Measurement* — The distance shall be from a lamp surface to be measured to a light-receiving lens surface of a measuring instrument. The size of viewing angle varies according to adjustment by luminance meter and the distance of measurement, set the distance to match the inner diameter mentioned above. When measuring, the inner surface of the lamp and the focal point shall be well matched (Figure 5). (If the focal point of the luminance meter is displaced, the luminance and chromaticity values will not be indicated correctly.)

9.2.3 *Timing of Measurement* — Measure after the luminance seems stable at a specified lamp current (where the luminance fluctuation difference is within ±3% of the stable luminance, for example) (see Figure 4).

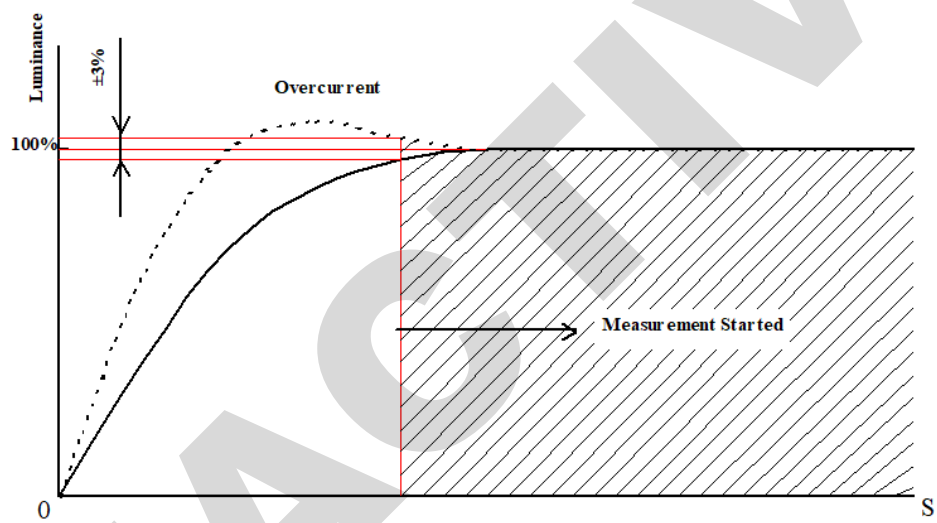

Figure 4
Measuring Time of Optical Characteristics

9.2.3.1 *Commentary on Figure 4* — The CCFL luminance has a special rising property. The highest luminance and stable luminance vary by the combination of ambient temperature and lamp current and the transitions vary as well. This is based upon the fact that the CCFL luminance depends on temperature and the generated heat by lighting affects it. For this reason, the luminance varies until the lamp wall temperature becomes stable. Before the measurement, grasp the special rising property of luminance and set the timing of measurement of the stable luminance.

9.2.4 *Measurement of Luminance* — Set a spectroradiometer or a colorimeter vertical to a side to be measured and measure according to the above-mentioned instruction of measurement. Avoid shades of mercury particles in the lamp (see Figure 5).

INACTIVE

Documents Document Sharing Hub
Full document details: SEMI D35-1103-0709R