# SEMI E1.9-0997

# PROVISIONAL MECHANICAL SPECIFICATION FOR CASSETTES USED TO TRANSPORT AND STORE 300-mm WAFERS

## 1 Purpose

This standard specifies the cassettes used to transport and store 300-mm wafers in an IC manufacturing facility. This includes both manual and auto-transport use as well as high-speed extraction of the wafers in processing equipment.

## 2 Scope

This standard is intended to set an appropriate level of specification that places minimal limits on innovation while ensuring modularity and inter-changeability at all mechanical interfaces. Most of the requirements given in this specification are in the form of maximum or minimum dimensions with very few required surfaces. Only the mechanical interfaces for cassettes are specified; no materials requirements or micro-contamination limits are given. However, this standard has been written so that both metal and injection-molded plastic cassettes can be manufactured in conformance with it.

The cassette has the following components and subcomponents:

- 1 top domain
  - 2 optical wafer sensing paths
  - 4 optional robotic handling flanges
- 4 Side domains
  - 2 front side domains
    - 13 or 25 wafer supports (each)
    - 2 optional pentagonal side grip pits (each)
    - 1 optical cassette sensing hole (each)
    - 1 cassette ID area (right side only)
  - 2 rear side domains
    - 13 or 25 wafer supports (each)
- 1 bottom domain
  - 2 optical wafer sensing paths
  - 5 cassette sensing paths
  - 1 pod latch-pin hole
  - 2 conveyor rails
  - 2 fork-lift pick-up areas
  - 2 fork-lift pin holes
  - 3 features that mate with kinematic coupling pins

This standard is provisional because of concerns about the kinematic coupling pins causing excessive wear on carriers, the pitch being too small, and the usefulness of the robotic handling flanges, side grip pits, fork-lift slots, and conveyor rails. Also, additional features may need to be added to allow the wafers to be more easily accessed in a vertical orientation. Once cassette testing is done, this standard should be modified and upgraded from provisional status.

## 3 Referenced Documents

3.1 *SEMI Documents*

*SEMI E15* — Specification for Tool Load Port

*SEMI E19* — Standard Mechanical Interface (SMIF)

*SEMI E44* — Guide for Procurement and Acceptance of Minienvironments

*SEMI E57* — Provisional Mechanical Specification for Kinematic Couplings Used to Align and Support 300 mm Wafer Carriers

## 4 Terminology

4.1 *bilateral datum plane* — A vertical plane that bisects the wafers and that is perpendicular to both the horizontal and facial datum planes (as defined in SEMI E57).

4.2 *box* — A protective portable container for a cassette and/or substrate(s) (as defined in SEMI E44).

4.3 *carrier capacity* — The number of substrates that a carrier holds.

4.4 *cassette* — An open structure that holds one or more substrates (as defined in SEMI E44).

4.5 *cassette bottom domain* — Volume (below z6 above the horizontal datum plane) that contains the bottom of the cassette.

SUPERSEDED



Documents
Document Sharing Hub
Full document details: SEMI E1.9-0997

4.6 *cassette sensing pads* — Surfaces on the bottom of the cassette for triggering optical or mechanical sensors.

4.7 *cassette side domains* — Volumes (from z6 above the horizontal datum plane to z15 above the top nominal wafer seating plane) that contain the mizo teeth or slots that support the wafer and the supporting columns on the sides and rear of the cassette.

4.8 *cassette top domain* — Volume (higher than z15 above the top wafer) that contains the top of the cassette.

4.9 *conveyor rails* — Parallel edges on the bottom of the cassette for supporting the cassette on roller conveyors.

4.10 *facial datum plane* — A vertical plane that bisects the wafers and that is parallel to the front side of the carrier (where wafers are removed or inserted). On tool load ports, it is also parallel to the load face plane specified in SEMI E15 on the side of the tool where the carrier is loaded and unloaded (as defined in SEMI E57).

4.11 *fork-lift slots* — Rectangular holes (open to the front and rear) in the bottom of the cassette for picking up the cassette with a fork.

4.12 *horizontal datum plane* — A horizontal plane from which projects the kinematic-coupling pins on which the carrier sits. On tool load ports, it is at the load height specified in SEMI E15 and might not be physically realized as a surface (as defined in SEMI E57).

4.13 *nominal wafer center line* — The line that is defined by the intersection of the two vertical datum planes (facial and bilateral) and that passes through the nominal centers of the seated wafers (which must be horizontal when the carrier is placed on the coupling) (as defined in SEMI E57).

4.14 *nominal wafer seating plane* — Horizontal plane that bisects the wafer pick-up volume.

4.15 *optical wafer sensing paths* — Lines of sight for optically sensing the positions of the wafers. Several horizontal optical wafer sensing paths are present in between the cassette side domains. In addition, two vertical optical wafer sensing paths are created by rectangular exclusion zones in the front of the cassette top and bottom.

4.16 *pod* — A box having a Standard Mechanical Interface (SMIF) per SEMI E19 (as defined in SEMI E44).

4.17 *process batch* — A set of substrates that are processed simultaneously in a process chamber.

4.18 *robotic handling flanges* — Four horizontal projections on the top of the box for lifting and rotating the cassette.

4.19 *sensor hole* — An indentation on the bottom of the cassette for inserting optical sensors.

4.20 *side grip pits* — Two rectangular indentations on each side of the cassette for lifting and rotating the cassette.

4.21 *transport group* — A set of substrates that are transported together between tools.

4.22 *virtual tracking unit* — An entity (which could be a number of substrates or an individual die or mask group) that the factory floor control system treats as a single unit for tracking purposes.

4.23 *wafer carrier* — Any cassette, box, pod, or boat that contains wafers (as defined in SEMI E15).

4.24 *wafer extracting volume* — The open space for extracting a wafer from the cassette.

4.25 *wafer set-down volume* — The open space for inserting and setting down a wafer in the cassette.

4.26 *wafer pick-up volume* — The space that contains entire bottom of a wafer if the wafer has been pushed to the rear of the cassette.

## 5 Ordering Information

5.1 *Intended Use* — This standard is intended to specify 300-mm cassettes over a reasonable lifetime of use, not just those in new condition. For this reason, the purchaser needs to specify a time period and the number and type of uses to which the cassettes will be put. It is under these conditions that the cassettes must remain in compliance with the requirements listed in Section 6.

5.2 *Temperature Ranges* — The purchaser of 300-mm cassettes needs to specify two sets of temperatures to which the cassettes might be exposed. An operating temperature range is the set of environmental temperatures in which the cassettes will remain in compliance with the requirements listed in Section 6. A temporary temperature range is the set of environmental tempera-

SUPERSEDED



Documents
Document Sharing Hub
Full document details: SEMI E1.9-0997

tures to which the cassettes can be exposed such that when the cassettes return to the operating temperature range, the cassettes will be in compliance with the requirements listed in Section 6. Limits on exposure times to elevated temperatures should be specified. Also, the purchaser needs to specify a range of temperatures for the wafers that might be inserted in the cassettes.

## 6 Requirements

6.1 *Kinematic Couplings* — The physical alignment interface on the bottom of the cassette consists of features (not specified in this standard) that mate with six pins underneath as defined in SEMI E57. Most of the dimensions of the cassette are determined with respect to the three orthogonal datum planes defined in that standard: the horizontal datum plane, the facial datum plane, and the bilateral datum plane. All of the dimensions for the cassette are bilaterally symmetric about the bilateral datum plane. The three features that mate with the pins must provide a lead-in capability that corrects a cassette misalignment of up to 10 mm (0.4 in.) in any horizontal direction, although 15 mm (0.6 in.) is recommended for ergonomic reasons. However, it is recommended that robots placing cassettes on kinematic couplings use as little of this lead-in capability as possible to avoid wear.

6.2 *Wafer Orientation and Numbering* — The wafers must be horizontal when the carrier is placed on the coupling, and the wafers are numbered in increasing order from bottom to top (so the bottom wafer is wafer number 1, the next wafer up is wafer number 2, etc.). After processing at a tool, each wafer should be returned to the same slot from which it was taken.

6.3 *Cassette Sides* — Figure 1 shows a cross-section of the horizontal boundaries of the cassette side domains (which contain the parts of the cassette higher than $z6$ above the horizontal datum plane and lower than $z15$ above the top wafer). In this and following figures, the most heavy lines are used for surfaces that have tolerances (not surfaces that have only maximum or minimum dimensions). Table 1 defines the dimensions shown in this and following figures. The maximum protrusions of any part of the cassette from the nominal wafer center line and from the bilateral datum plane is $r5$ and $x9$, respectively. There are two optional side grip pits on each side. For optically sensing whether a cassette is properly in place, from left to right under the bottom wafer is an optical cassette sensing hole. The radius of this hole is given with both upper and lower tolerances, but the upper tolerance is only to define a minimum aperture that must be met at only one section on each side. Other than through the optical cassette sensing holes, the cassette bottom and side domains must block any line of sight passing through both of the two rectangles at $x10$ on each side bounded by $z4$, $z20$, $y2$, and $y3$.

SUPERSEDED



Documents
Document Sharing Hub
Full document details: SEMI E1.9-0997

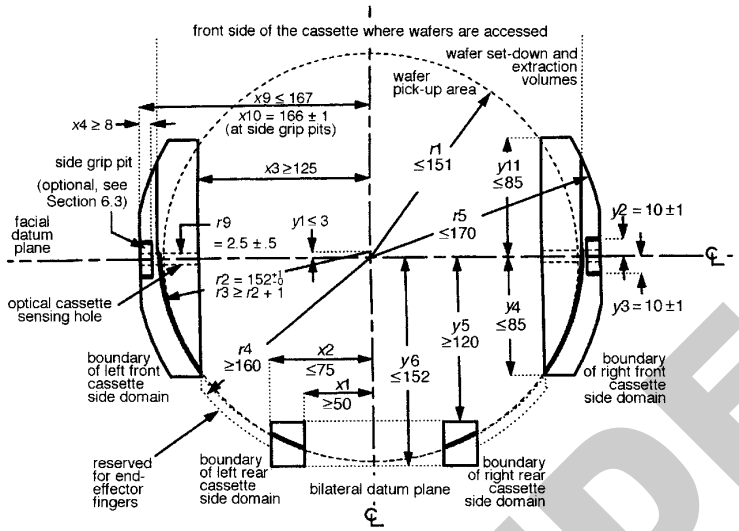


**Figure 1**

**Cassette Side Domains**

6.4 *Cassette Top* — Figure 2 shows a top view of the horizontal boundaries of the cassette top domain which contains any part of the cassette higher than *z*15 above the top nominal wafer plane. The top robotic handling flanges (optional), the side grip pits (optional), and optical cassette sensing hole on the side can be seen in Figure 3 which is an oblique view of the maximum cassette dimensions (see Figure 14 to see how cassettes need not take up all of that volume). The maximum radial protrusions of the cassette top in the front and rear are *r*6 and *r*12, respectively. Dimensions *x*6, *x*12 (shown in Figure 4), and *y*15 define a vertical path for optically sensing wafers through the top and bottom domains.

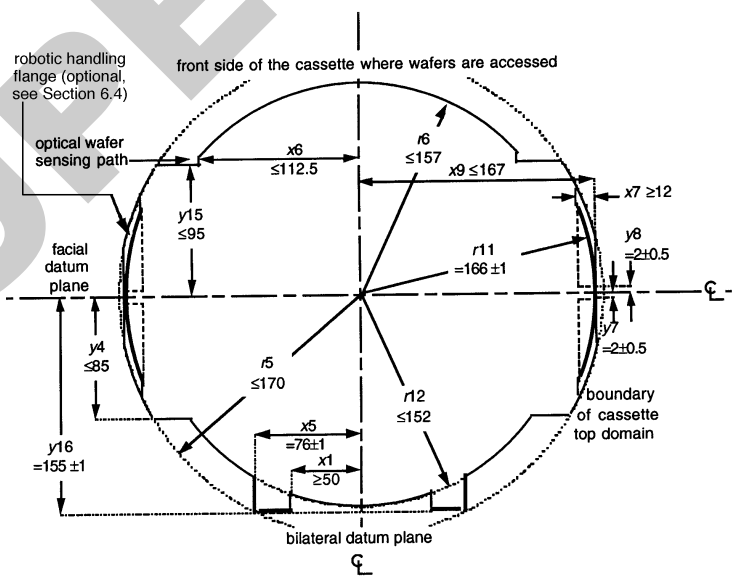


**Figure 2**

**Cassette Top Domain**

SUPERSEDED



Documents
Document Sharing Hub
Full document details: SEMI E1.9-0997

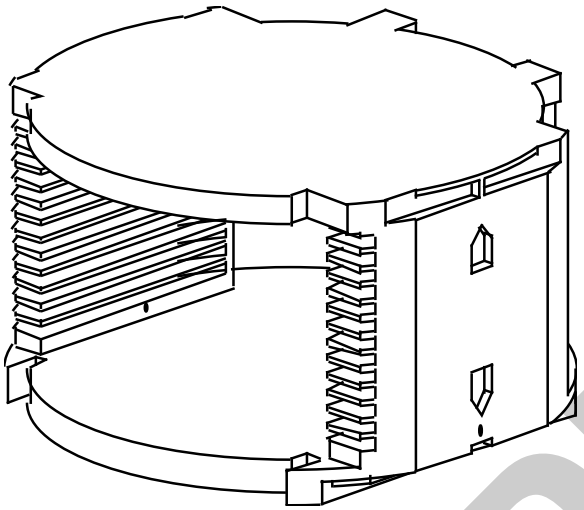

**Figure 3**
**Oblique View of Maximum Cassette Dimensions**

6.5 *Cassette Bottom* — Figure 4 shows a bottom view of the horizontal boundaries of the cassette bottom domain (which contains any part of the cassette lower than *z*6 above the horizontal datum plane). At the nominal wafer center line, a circular hole with a radius of *r*7 must be present (up to a height of *z*5) in the cassette bottom to avoid interfering with pod latch pins. For moving the cassette on roller conveyors and for picking up the cassette with a fork lift, the cassette must have surfaces on the left and right open to the bottom and outside bounded by *x*15, *x*16, *r*10, *z*3, and *z*4. A cylindrical section of radius *r*8 and axis at *x*11 on the facial datum plane must be clear up to a height of *z*22 to hold the cassette firmly on the lifting forks by the use of a cylindrical pin.

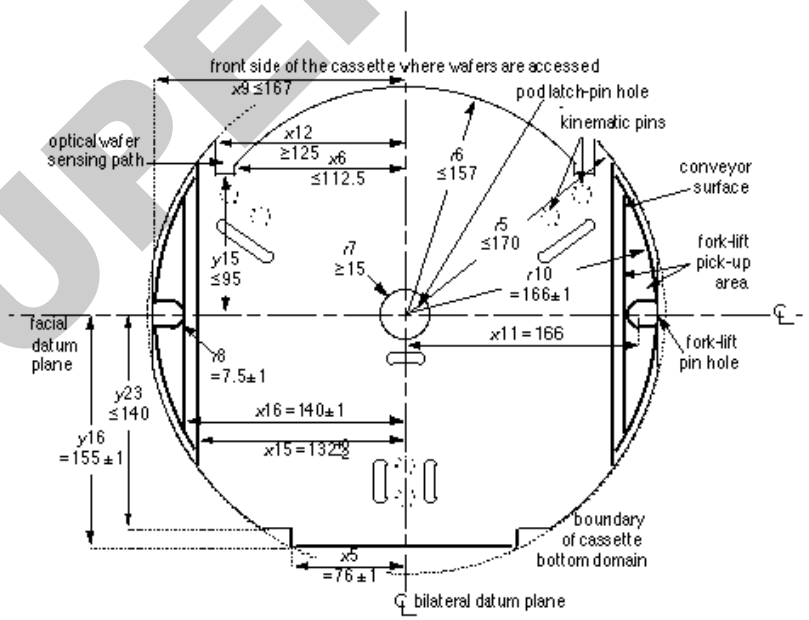


**Figure 4**
**Cassette Bottom Domain**



SUPERSEDED
AVA Documents Document Sharing Hub
Full document details: SEMI E1.9-0997

6.6 *Cassette Sensing Pads* — When the cassette is fully down, the cassette sensing pads (shown in Figure 5) must be *z*2 above horizontal datum plane.

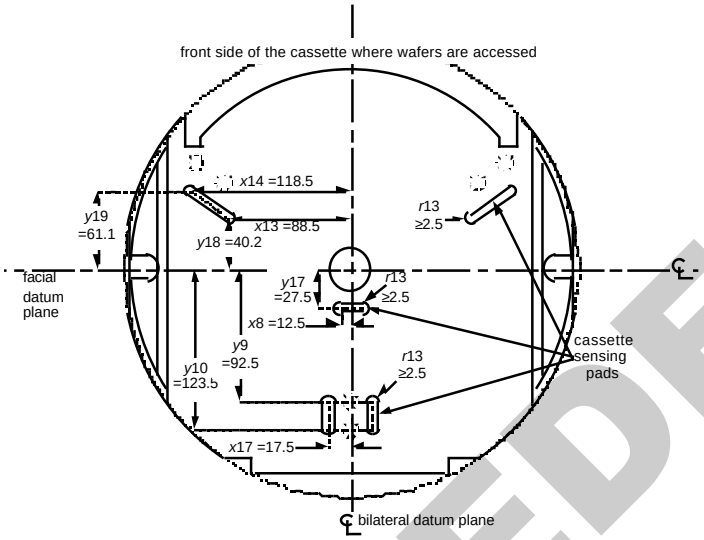


**Figure 5**
**Cassette Sensing Pads**

6.7 *Vertical Dimensions* — Figures 6 through 11 show the vertical dimensions of the cassette. Note that *z*8 (the height of the bottom nominal wafer seating plane above the horizontal datum plane) and *z*12 (the distance between adjacent nominal wafer seating planes) are given as absolute distances with no tolerance. This means that the sum of actual height variations in the cassette from the kinematic coupling to the supporting features holding each wafer must be contained within the tolerance of *z*10 with no further stack-up at each higher wafer. The method for meeting this requirement is left up to the cassette supplier.

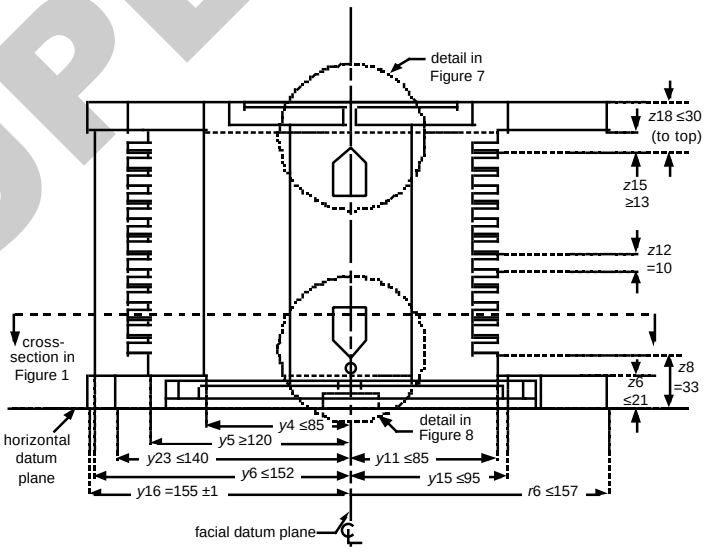


**Figure 6**
**Side View of Cassette**

SUPERSEDED



Documents
Document Sharing Hub
Full document details: SEMI E1.9-0997