SEMI E1.9-1106
MECHANICAL SPECIFICATION FOR CASSETTES USED TO TRANSPORT AND STORE 300 mm WAFERS

This Standard was technically approved by the Physical Interfaces & Carriers Global Technical Committee. This edition was approved for publication by the global Audits and Reviews Subcommittee on May 16, 2006. Available at www.semi.org in November 2006; originally published in 1994; previously published July 2006.

1 Purpose

1.1 This standard specifies the cassettes used to transport and store 300 mm wafers in an IC manufacturing facility. This includes both manual and auto-transport use as well as high-speed extraction of the wafers in processing equipment.

2 Scope

2.1 This standard is intended to set an appropriate level of specification that places minimal limits on innovation while ensuring modularity and interchangeability at all mechanical interfaces. Most of the requirements given in this specification are in the form of maximum or minimum dimensions with very few required surfaces. Only the mechanical interfaces for cassettes are specified; no materials requirements or micro-contamination limits are given. However, this standard has been written so that both metal and injection-molded plastic cassettes can be manufactured in conformance with it.

2.2 The cassette has the following components and sub-components, and other features. A "†" symbol indicates components or features that include dimensions required for boxes with non-removable cassettes.

Key:

- • Required feature
- ◊ Optional feature

- • 1 top domain
- • 2 optical wafer sensing paths
  - ◊ 4 robotic handling flanges (optional)
  - ◊ 1 top cassette identification tag area (optional)
- • 2 or 4 side domains (2 in front and 2 in rear, if needed)
- • supports (for 13 or 25 wafers) with correct wafer pitch (10 mm) †
- • 1 optical cassette sensing hole on each front side domain
  - ◊ 1 side cassette identification tag area on front right side domain only (optional)
  - ◊ features that prevent wafer creep-out (optional)
  - ◊ 2 pentagonal side grip pits on each front side domain (optional)
- • 1 bottom domain
- • 2 optical wafer sensing paths
- • 5 carrier sensing pads †
- • 4 info pads †
- • 1 pod latch-pin hole
- • 2 conveyor rails
- • 2 fork-lift pick-up areas

SUPERSEDED

Documents Document Sharing Hub
Full document details: SEMI E1.9-1106

- 2 fork-lift pin holes
- 3 features that mate with kinematic coupling pins and provide a 10 mm lead in †
  - ◊ 3 features that mate with kinematic coupling pins and provide a 15 mm lead in (optional)
  - ◊ 1 bottom cassette identification tag area (optional)
- Other features
- multiple horizontal wafer sensing paths
- end effector exclusion zone †

NOTICE: SEMI Standards and Safety Guidelines do not purport to address all safety issues associated with their use. It is the responsibility of the users of the Documents to establish appropriate safety and health practices, and determine the applicability of regulatory or other limitations prior to use.

3 Referenced Standards and Documents

3.1 *SEMI Standards and Safety Guidelines*

SEMI E15 — Specification for Tool Load Port

SEMI E19 — Standard Mechanical Interface (SMIF)

SEMI E57 — Provisional Mechanical Specification for Kinematic Couplings Used to Align and Support 300 mm Wafer Carriers

NOTICE: Unless otherwise indicated, all documents cited shall be the latest published versions.

4 Terminology

4.1 *bilateral datum plane* — a vertical plane that bisects the wafers and that is perpendicular to both the horizontal and facial datum planes (as defined in SEMI E57).

4.2 *box* — a protective portable container for a cassette and/or substrate(s).

4.3 *carrier capacity* — the number of substrates that a carrier holds.

4.4 *cassette* — an open structure that holds one or more substrates.

4.5 *cassette bottom domain* — volume (below z6 above the horizontal datum plane) that contains the bottom of the cassette.

4.6 *cassette sensing pads* — surfaces on the bottom of the cassette for triggering optical or mechanical sensors.

4.7 *cassette side domains* — volumes (from z6 above the horizontal datum plane to z15 above the top nominal wafer seating plane) that contain the mizo teeth or slots that support the wafer and the supporting columns on the sides and rear of the cassette.

4.8 *cassette top domain* — volume (higher than z15 above the top wafer) that contains the top of the cassette.

4.9 *conveyor rails* — parallel edges on the bottom of the cassette for supporting the cassette on roller conveyors.

4.10 *facial datum plane* — a vertical plane that bisects the wafers and that is parallel to the front side of the carrier (where wafers are removed or inserted). On tool load ports, it is also parallel to the load face plane specified in SEMI E15 on the side of the tool where the carrier is loaded and unloaded (as defined in SEMI E57).

4.11 *fork-lift slots* — rectangular holes (open to the front and rear) in the bottom of the cassette for picking up the cassette with a fork.

4.12 *front-opening unified pod (FOUP)* — a box (that complies with SEMI E47.1) with a non-removable cassette (so that its interior complies with SEMI E1.9) and with a front-opening interface (that mates with a FIMS port that complies with SEMI E62) (as defined in SEMI E47.1).

SUPERSEDED

Documents
Document Sharing Hub
Full document details: SEMI E1.9-1106

4.13 *horizontal datum plane* — a horizontal plane from which projects the kinematic-coupling pins on which the carrier sits. On tool load ports, it is at the load height specified in SEMI E15 and might not be physically realized as a surface (as defined in SEMI E57).

4.14 *nominal wafer center line* — the line that is defined by the intersection of the two vertical datum planes (facial and bilateral) and that passes through the nominal centers of the seated wafers (which must be horizontal when the carrier is placed on the coupling) (as defined in SEMI E57).

4.15 *nominal wafer seating plane* — horizontal plane that bisects the wafer pick-up volume.

4.16 *optical wafer sensing paths* — lines of sight for optically sensing the positions of the wafers. Several horizontal optical wafer sensing paths are present in between the cassette side domains. In addition, two vertical optical wafer sensing paths are created by rectangular exclusion zones in the front of the cassette top and bottom.

4.17 *pod* — a box having a Standard Mechanical Interface (SMIF) per SEMI E19.

4.18 *process batch* — a set of substrates that are processed simultaneously in a process chamber.

4.19 *robotic handling flanges* — four horizontal projections on top of the cassette for lifting and rotating the cassette.

4.20 *sensor hole* — an indentation on the bottom of the cassette for inserting optical sensors.

4.21 *side grip pits* — two rectangular indentations on each side of the cassette for lifting and rotating the cassette.

4.22 *transport group* — a set of substrates that are transported together between tools.

4.23 *virtual tracking unit* — an entity (which could be a number of substrates or an individual die or mask group) that the factory floor control system treats as a single unit for tracking purposes.

4.24 *wafer carrier* — any cassette, box, pod, or boat that contains wafers (as defined in SEMI E15).

4.25 *wafer extraction volume* — the open space for extracting a wafer from the cassette.

4.26 *wafer pick-up volume* — the space that contains entire bottom of a wafer if the wafer has been pushed to the rear of the cassette.

4.27 *wafer set-down volume* — the open space for inserting and setting down a wafer in the cassette.

5 Ordering Information

5.1 *Intended Use* — This standard is intended to specify 300 mm cassettes over a reasonable lifetime of use, not just those in new condition. For this reason, the purchaser needs to specify a time period and the number and type of uses to which the cassettes will be put. It is under these conditions that the cassettes must remain in compliance with the requirements listed in § 6.

5.2 *Temperature Ranges* — The purchaser of 300 mm cassettes needs to specify two sets of temperatures to which the cassettes might be exposed. An operating temperature range is the set of environmental temperatures in which the cassettes will remain in compliance with the requirements listed in § 6. A temporary temperature range is the set of environmental temperatures to which the cassettes can be exposed such that when the cassettes return to the operating temperature range, the cassettes will be in compliance with the requirements listed in § 6. Limits on exposure times to elevated temperatures should be specified. Also, the purchaser needs to specify a range of temperatures for the wafers that might be inserted in the cassettes.

5.3 *Info Pad Configurations* — The purchaser of 300 mm carriers needs to specify the desired info pad configuration (up or down). See Appendix 1 (Application Notes).

6 Requirements

6.1 *Kinematic Couplings* — The physical alignment interface on the bottom of the cassette consists of features (not specified in this standard) that mate with six pins underneath as defined in SEMI E57. Most of the dimensions of the cassette are determined with respect to the three orthogonal datum planes defined in that standard: the horizontal datum plane, the facial datum plane, and the bilateral datum plane. All of the dimensions for the cassette are bilaterally symmetric about the bilateral datum plane. The three features that mate with the pins must provide a lead-in capability that corrects a cassette misalignment no greater than *r*19 in any horizontal direction. However, it is recommended that robots placing cassettes on kinematic couplings use as little of this lead-in capability as possible to avoid wear.

SUPERSEDED

Documents Document Sharing Hub
Full document details: SEMI E1.9-1106

6.2 *Wafer Orientation and Numbering* — The wafers must be horizontal when the carrier is placed on the coupling, and the wafers are numbered in increasing order from bottom to top (so the bottom wafer is wafer number 1, the next wafer up is wafer number 2, etc.). After processing at a tool, each wafer should be returned to the same slot from which it was taken.

6.3 *Cassette Sides* — Figure 1 shows a cross-section of the horizontal boundaries of the cassette side domains (which contain the parts of the cassette higher than *z*6 above the horizontal datum plane and lower than *z*15 above the top wafer). In this and following figures, the most heavy lines are used for surfaces that have tolerances (not surfaces that have only maximum or minimum dimensions). Table 1 defines the dimensions shown in this and following figures. The maximum protrusions of any part of the cassette from the nominal wafer center line and from the bilateral datum plane is *r*5 and *x*9, respectively. There are two optional side grip pits on each side. For optically sensing whether a cassette is properly in place, from left to right under the bottom wafer is an optical cassette sensing hole. The radius of this hole is given with both upper and lower tolerances, but the upper tolerance is only to define a minimum aperture that must be met at only one section on each side. Other than through the optical cassette sensing holes, the cassette bottom and side domains must block any line of sight passing through both of the two rectangles at *x*10 on each side bounded by *z*4, *z*20, *y*2, and *y*3.

6.4 *Cassette Top* — Figure 2 shows a top view of the horizontal boundaries of the cassette top domain, which contains any part of the cassette higher than *z*15 above the top nominal wafer plane. The top robotic handling flanges (optional), the side grip pits (optional), and optical cassette sensing hole on the side can be seen in Figure 3, which is an oblique view of the maximum cassette dimensions (see Figure 14 to see how cassettes need not take up all of that volume). The maximum radial protrusions of the cassette top in the front and rear are *r*6 and *r*12, respectively. Dimensions *x*6, *x*12 (shown in Figure 4), and *y*15 define a vertical path for optically sensing wafers through the top and bottom domains.

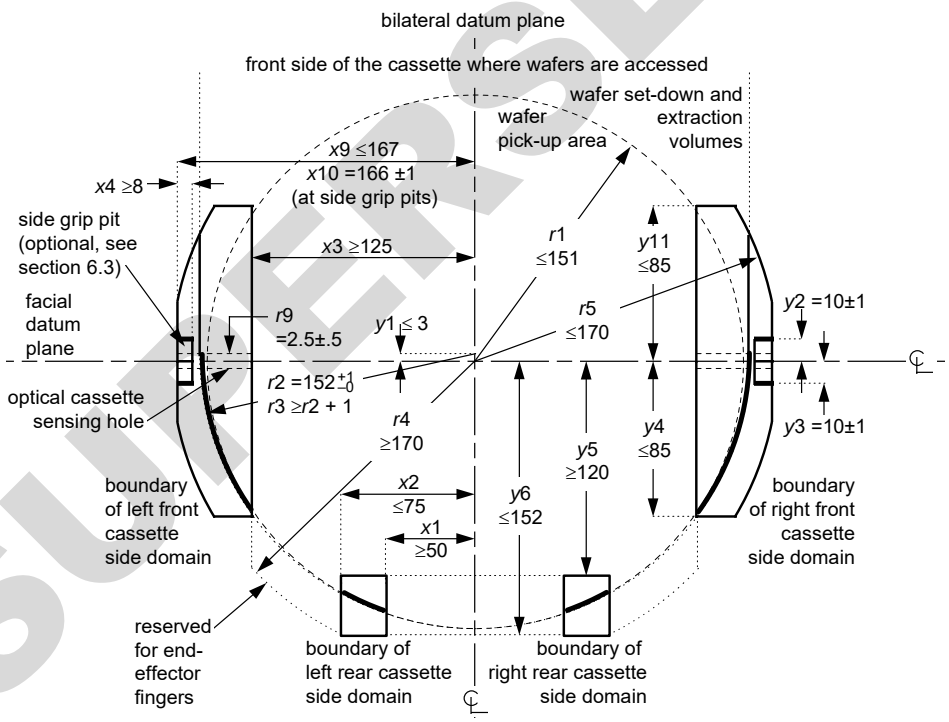

Figure 1
Cassette Side Domains

SUPERSEDED

Documents
Document Sharing Hub
Full document details: SEMI E1.9-1106

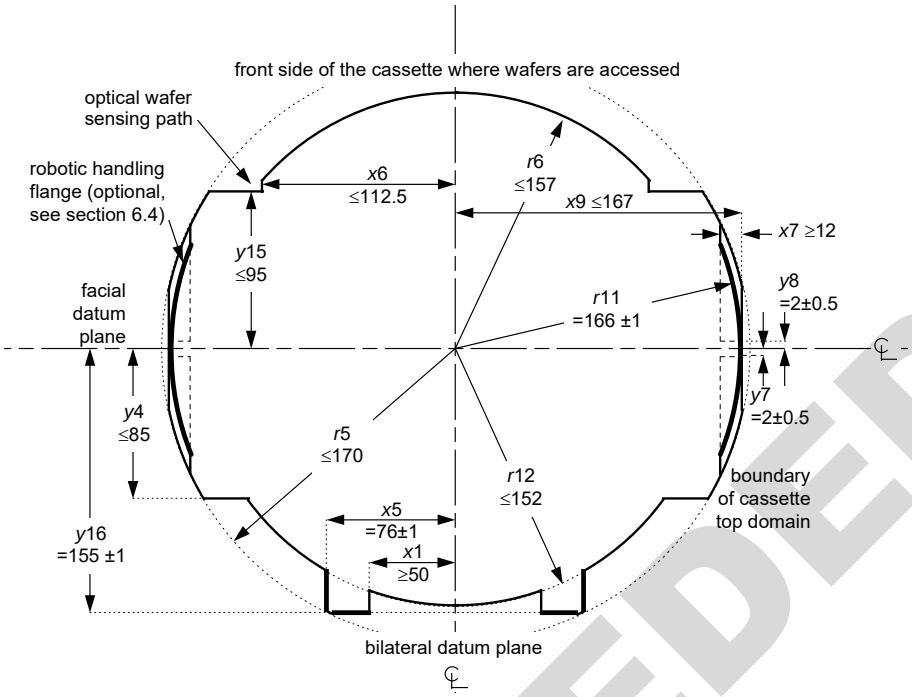

Figure 2
Cassette Top Domain

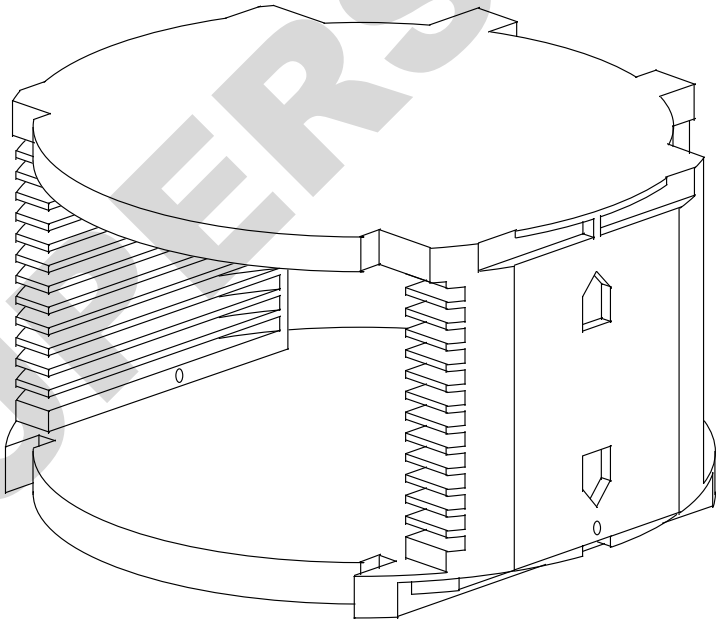

Figure 3
Oblique View of Maximum Cassette Dimensions

SUPERSEDED

Documents Document Sharing Hub
Full document details: SEMI E1.9-1106

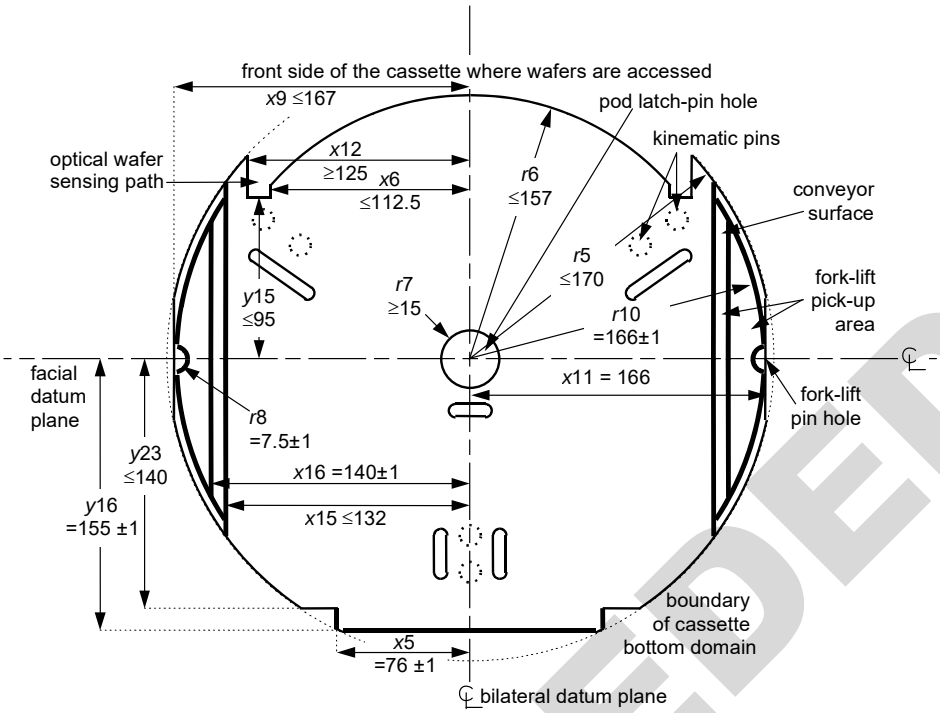

Figure 4
Cassette Bottom Domain

6.5 *Cassette Bottom* — Figure 4 shows a bottom view of the horizontal boundaries of the cassette bottom domain (which contains any part of the cassette lower than *z*6 above the horizontal datum plane). At the nominal wafer center line, a circular hole with a radius of *r*7 must be present (up to a height of *z*5) in the cassette bottom to avoid interfering with pod latch pins. For moving the cassette on roller conveyors and for picking up the cassette with a fork lift, the cassette must have surfaces on the left and right open to the bottom and outside bounded by *x*15, *x*16, *r*10, *z*3 and *z*4. A cylindrical section of radius *r*8 and axis at *x*11 on the facial datum plane must be clear up to a height of *z*22 to hold the cassette firmly on the lifting forks by the use of a cylindrical pin.

6.6 *Carrier Sensing Pads and Info Pads* — When the cassette is fully down, the carrier sensing pads (shown in Figure 5) must be *z*2 above the horizontal datum plane. It is recommended that the areas surrounding all of the carrier sensing pads be designed in conjunction with the features that mate with kinematic coupling pins so that a mechanical sensor pin cannot interfere with the lead-in function of the kinematic couplings. Other sensing pads (called info pads and given letter names) communicate information about the carrier. Carrier types that might need differentiation include the open cassette, the front-opening unified pod (FOUP), the single-wafer interface (SWIF), and the front-opening shipping box (FOSB) in both 13 wafer and 25 wafer capacities (and possibly other capacities if reduced pitch versions are later standardized). Note that since this is a bottom view, the positions of sensors on a load port will be switched, with the sensor for info pad A on the right and the sensor for info pad B on the left as one faces the tool from the front.

6.7 *Vertical Dimensions* — Figures 6 through 13 show the vertical dimensions of the cassette. Note that *z*8 (the height of the bottom nominal wafer seating plane above the horizontal datum plane) and *z*12 (the distance between adjacent nominal wafer seating planes) are given as absolute distances with no tolerance. This means that the sum of actual height variations in the cassette from the kinematic coupling to the supporting features holding each wafer must be contained within the tolerance of *z*10 with no further stack-up at each higher wafer. The method for meeting this requirement is left up to the cassette supplier.

6.7.1 The open space for the wafer set-down volume consists of a cylindrical section with radius *r*2 and a main axis parallel to and *y*1 in front of the nominal wafer center line. The top of this cylindrical section is *z*11 above the nominal wafer seating plane and its bottom is *z*10 above the nominal wafer seating plane. The implications for wafer positioning of the tolerance on *r*2 are as follows. The wafers should be placed in the cassette within a circle of radius corresponding

SUPERSEDED

Documents
Document Sharing Hub
Full document details: SEMI E1.9-1106

to the smaller bound on $r2$ to avoid touching the edge of the wafer to the side of the cassette. Once the wafer has been placed, the cassette must not allow a wafer to move outside of a circle of radius corresponding to the larger bound on $r2$. There are two exceptions to this limit on wafer movement. When the wafer is pushed toward the rear of the cassette, the location of the wafer is defined by the wafer pick-up volume (see § 6.7.3). When the cassette is gently tilted forward up to 45°, the wafers may slide forward, but it is recommended that they not extend further than $y20$ from the facial datum plane. This may be accomplished by designing the teeth supporting the wafers to include a "wafer stopper" at the front (as shown in Figure 11) that is outside of $r2$ and under $z29$. Note that use of this feature will reduce the height of the wafer extraction volume.

6.7.2 The open space for the wafer extraction volume includes a cylindrical section with radius $r3$ and a main axis parallel to and $y1$ in front of the nominal wafer center line. The top of this cylindrical section is $z11$ above the nominal wafer seating plane and its bottom is $z23$ above the nominal wafer seating plane. The wafer extraction volume also includes the extrusion out the front of the cassette of this cylindrical section and the portion of the wafer set-down volume above $z29$. The implications for wafer extraction of the definition of dimension $r3$ ($r3 \geq r2 + 1$) are as follows. The cassette must give an extra 1 mm (0.04 in.) of horizontal clearance once the wafer is picked up from wherever it ends up (within the bounds of $r2$) after transport in the cassette.

6.7.3 If a wafer is placed in the wafer set-down volume and is then pushed toward the rear of the cassette, then the entire bottom of the wafer must be contained in the wafer pick-up volume. However, if the wafer is not pushed toward the rear of the cassette (or the cassette is not tilted back during transport), then the wafer may only be somewhere within the wafer extraction volume. The wafer pick-up volume is defined by a cylindrical section with radius $r1$ and a main axis at the nominal wafer center line. Its top and bottom are the upper and lower tolerance of $z10$ around the nominal wafer seating plane.

6.7.4 To prevent wafers from creeping out of the cassette during transport, the fork-lift area may be slanted so that the front of the cassette is higher than the rear. Specifically, the surface defined by $z4$ may be rotated by an angle ω about the line where $z4$ intersects $y29$ (as shown in Figure 13). Only the surface behind $y29$ may be rotated. Thus, the height of $z4$ shown in Figure 12 might only be defined at $y29$, and $z4$ can be greater than 15 ± 1 behind $y29$. However, the flatness of the resulting tilted surface must still fall within the tolerance given for $z4$.

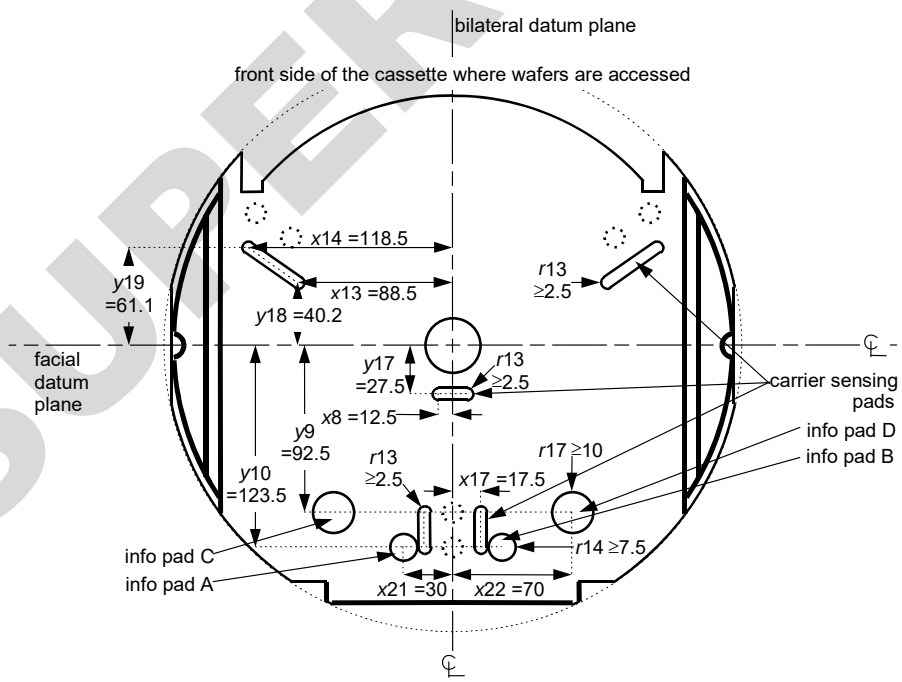

Figure 5
Carrier Sensing Pads in Bottom View

SUPERSEDED
Documents
Document Sharing Hub
Full document details: SEMI E1.9-1106