SEMI E112-0304
PROVISIONAL MECHANICAL SPECIFICATION FOR A 150 mm MULTIPLE RETICLE SMIF POD (MRSP150) USED TO TRANSPORT AND STORE MULTIPLE 6 INCH RETICLES

This specification was technically approved by the Global Physical Interfaces and Carriers Committee and is the direct responsibility of the North American Physical Interfaces and Carriers Committee. Current edition approved by the North American Regional Standards Committee on October 15, 2003. Initially available at www.semi.org February 2004; to be published March 2004. Originally published November 2001; previously published March 2003.

SUPERSEDED

1 Purpose

1.1 This standard specifies the 150 mm Multiple Reticle SMIF Pod (MRSP150) used to transport and store six 6 inch reticles in an integrated circuit (IC) manufacturing facility.

2 Scope

2.1 This standard is intended to set an appropriate level of specification that places minimal limits on innovation while ensuring modularity and inter-changeability at all mechanical interfaces. Most of the requirements given in this specification are in the form of maximum or minimum dimensions with very few required surfaces. Only the physical interfaces for the MRSP150 are specified; no materials requirements or micro-contamination limits are given in this specification.

2.2 The pellicle exclusion volumes of this specification accommodates pellicles which extend the full length of the reticle and up to a maximum pellicle width of 124 mm.

2.3 The MRSP150 has the following components, sub-components, and other features. A "●" symbol indicates components or features which are *required* and a "◊" symbol indicates components or features which are *optional*.

- Top
  - ◊ robotic handling flange
- Interior
  - supports for six 6 inch reticles
  - reticle capture
  - reticle contact surfaces
  - end-effector exclusion volumes
  - 2 safety rail exclusion volumes
  - pellicle exclusion volumes
  - lateral constraints
  - reticle backstop
- Sides
  - ◊ 2 side handling flanges on the sides parallel to the bi-lateral reference plane
  - 2 side handling exclusion volumes
  - RFID placement zone
- Bottom
  - door compatible with SMIF as defined in SEMI E19.3
  - pod latch-pin holes
  - 2 conveyor rails on the sides parallel to the bi-lateral reference plane

2.4 This standard is provisional because of the issues detailed in the related information section. Once investigation of issues in the related information section has been completed, this standard should be upgraded from provisional status.

NOTICE: This standard does not purport to address safety issues, if any, associated with its use. It is the responsibility of the users of this standard to establish appropriate safety health practices and determine the applicability of regulatory or other limitations prior to use.

3 Referenced Standards

3.1 *SEMI Standards*

SEMI E19.3 — Port Standard for Mechanical Interface if Wafer Cassette Transfer, 150 mm (6 inch) Port

SEMI E30.1 — Inspection and Review Specific Equipment Model (ISEM)

SEMI E47.1 — Provisional Mechanical Specification for Boxes and Pods Used to Transport and Store 300 mm Wafers

SEMI P5 — Specification for Pellicles

NOTICE: Unless otherwise indicated, all documents cited shall be the latest published versions.

Documents Document Sharing Hub
Full document details: SEMI E112-0304

4 Terminology

4.1 *Definitions*

4.1.1 *150 mm Multiple Reticle SMIF Pod* (MRSP150) — a minienvironment compatible carrier capable of holding six 6 inch reticles in a horizontal orientation during transport and storage and is compatible with a Standard Mechanical Interface (SMIF) per SEMI E19.3.

4.1.2 *bilateral reference plane* — a vertical plane which bisects the MRSP150 and is perpendicular to both the horizontal and facial reference planes and passes through the center of the 150 mm SMIF as defined in SEMI E19.3.

4.1.3 *facial reference plane* — a vertical plane which bisects the MRSP150 and is parallel to the front side of the pod (where reticles are removed or inserted) and passes through the center of the 150 mm SMIF as defined in SEMI E19.3.

4.1.4 *horizontal reference plane* — a horizontal plane coplanar with the top surface of the port door as defined in SEMI E19.3.

4.1.5 *minienvironment* — a localized environment created by an enclosure to isolate the product from contamination and people.

4.1.6 *nominal reticle center line* — the line that is defined by the intersection of two perpendicular vertical planes each of which bisect the reticle at the mid-point of a side.

4.1.7 *pellicle* — as defined in SEMI P5.

4.1.8 *reticle* — as defined in SEMI E30.1.

4.1.9 *robotic handling flanges* — horizontal projections on the top of the box for lifting and rotating the box (as defined in SEMI E47.1).

4.1.10 *side handling flanges* — horizontal projections on the sides of the pod (sides parallel to the bilateral reference plane) for lifting, transportation or positioning of the pod.

5 Ordering Information

5.1 *Intended Use* — This standard is intended to specify reticle carriers over a reasonable lifetime of use, not just those in new condition. For this reason, the purchaser should specify a time period and the number and type of uses to which the carriers will be put. It is under these conditions that the carriers must remain in compliance with the requirements listed in Section 6.

5.2 *Reticle Thickness* — The purchaser needs to specify the reticle thickness to be accommodated in the MRSP150.

5.3 *Optional Features* — The purchaser needs to specify whether optional components (identified in Section 2) are required.

5.4 *Temperature Ranges* — The purchaser needs to specify two sets of temperatures to which the MRSP150s might be exposed. An operating temperature range is the set of environmental temperatures in which the MRSP150s will remain in compliance with the requirements listed in Section 6. A temporary temperature range is the set of environmental temperatures to which the pods can be exposed such that when the MRSP150s return to the operating temperature range, the MRSP150s will be in compliance with the requirements listed in Section 6. Limits on exposure times to elevated temperatures should be specified.

5.5 *Electrostatic Dissipation* — The end user may require a continuous path to ground from the reticle to the carrier registration and handling features. The purchaser needs to specify whether electrostatic dissipation is required.

5.6 *Contamination Requirements* — The purchaser needs to specify their contamination requirements.

6 Requirements

6.1 *Symmetry* — Most of the dimensions of the MRSP150 are determined with respect to the three orthogonal reference planes defined in this document: the facial reference plane, the horizontal reference plane and the bilateral reference plane. All dimensions are symmetric about the bilateral reference plane.

6.2 *Door* — The pod door, and its frame on the bottom of the pod, must be compatible with a port which conforms to SEMI E19.3.

6.3 *Numbering* — The reticles are numbered in increasing order from bottom to top (so the bottom reticle is reticle number 1, to the top reticle which is reticle number 6).

6.4 *Positioning* — The nominal reticle seating planes are defined by z291 through z296 as shown in Figure 4 and Table 1. The entire bottom surface of a reticle must lie within the z276 dimension of its nominal seating plane shown in Figure 6 and Table 1.

6.5 *Reticle Contact Surfaces* — The reticle contact surfaces are the only 4 locations where the MRSP150 may contact the pellicle side of the reticle. These surfaces are shown in Figures 8 and 9 with dimensions given in Table 1. The contact surfaces are defined by x245, x246, y233, y234 and y235.

6.6 *Reticle Capture* — When the carrier is closed, a bisecting plane through the reticle, parallel to the

SUPERSEDED

Documents
Document Sharing Hub
Full document details: SEMI E112-0304

bilateral reference plane must be within x114 of the bilateral reference plane of the load port when the reticle is seated in the carrier. A bisecting plane through the reticle, parallel to the facial reference plane must be within y228 of the facial reference plane of the load port when the reticle is seated in the carrier.

6.7 *Exclusion Volumes* — The interior of the MRSP150 must never intrude into the pellicle exclusion volume, and must not intrude into the end-effector exclusion volumes, lift clearance exclusion volumes or safety rail exclusion volumes when the carrier is open.

6.7.1 *End-Effector Exclusion Volumes* — Volumes in an opened pod which must be free for the end-effector to enter and handle the reticle as defined by x238, x239, x240, y227, y232, y238, z297, z299, z302 (first reticle) and z300 (second through sixth reticle). No obstructions should exist in the end-effector exclusion volumes which extend in the y direction (normal to the facial reference plane.) Table 1 defines the dimensions for the end-effector exclusion volumes shown in Figures 4, 6, 7 and 8.

6.7.2 *Pellicle Exclusion Volume* — Volume in the pod below the reticle which must remain free from intrusion to accommodate the pellicle mounted on the reticle. No obstructions should exist in the pellicle exclusion volume as defined by x119, z290 (first reticle) and the previous reticle lift clearance exclusion volume (second through sixth reticle) which extends in the y direction (normal to the facial reference plane). The pellicle exclusion volume is defined in Table 1 and shown in Figure 4.

6.7.3 *Reticle Lift Clearance Exclusion Volumes* — Volumes in an opened pod which must be free to allow the end-effector to lift and handle the reticles, as defined by x243, z298 and z311 (sixth reticle) as shown in Table 1 and Figures 4 and 6. No obstructions should exist in the reticle lift clearance exclusion volumes which extend in the y direction (normal to the facial reference plane.)

6.7.4 *Safety Rail Exclusion Volumes* — Volumes in an opened pod which must remain free from intrusion to accommodate safety rails which may be used on end-effectors to protect the edge of the reticle during handling. No obstructions should exist in the safety rail exclusion volumes which extend in the y direction (normal to the facial reference plane) as defined by x241 and z301 in Table 1 and shown in Figure 4.

6.7.5 *Rear Retainer Volume* — Volume in an opened pod in which any reticle rear retainer must exist. The volume is defined by x242 and y226 as shown in Figure 7 and Table 1.

NOTE 1: This volume is never to be accessed by an end-effector.

6.7.6 *Reticle Backstops* — The interior of the MRSP150 shall have reticle backstops which may be used by end-effectors to position the reticle when being removed from the MRSP150.

NOTE 2: These are the minimum required backstops, the backstops may be larger than this minimum specification, occupying any part of the rear retainer volume. The dimensions are defined by x249, x250, y239 and z314 as shown in Table 1 and in Figure 7.

6.7.7 *RFID Placement Zone* — Zone in the pod where the RFID transponder is placed, which may be used for RF communications during reticle handling. The entire RFID transponder must be positioned within the zone defined by x251, x252, y239, y240, z308, z315, z316 in Table 1 and shown in Figures 1, 3, 11. Pod suppliers may also place other features in this placement zone (such as the pod wall, RFID transponder support brackets, etc).

6.8 *External Dimensions* — Figures 1, 2, 3, 5 and 10 show, respectively, the external top view, a detail, the rear view, the robotic handling flange and the conveyor rails of the MRSP150. Table 1 defines the external dimensions of the MRSP150.

6.9 *Internal Dimensions* — Figures 4, 6 and 7 show internal dimensions of the MRSP150. Table 1 defines the internal dimensions of the MRSP150.

6.10 *Robotic Handling Flange* — On the top of the pod is an optional robotic handling flange for automated manipulation of the MRSP150. Figures 1, 3 and 5 show dimensions for the robotic handling flange. Table 1 defines the dimensions for the robotic handling flange.

6.11 *Recess* — Surface on the top of the pod defined by dimensions x100, y106 and z281. Figures 1 and 3 show dimension for the recess. The recess provides clearance for use of robotic handling flange.

NOTE 3: The raised surface around the recess is not required.

6.12 *Side Handling Flanges* — On the sides of the pod parallel to the bilateral reference plane are optional handling flanges for automated manipulation of the MRSP150. Figures 1, 2 and 3 show dimensions for the side handling flanges. Table 1 defines the dimensions for the side handling flanges. No obstructions may exist in the side handling exclusion volumes which extend in the y direction (normal to the facial reference plane) as defined by x236 and z286.

6.13 *Conveyor Rails* — Surfaces on the bottom of the MRSP150 used to transport the MRSP on conveyors. The rails consist of smooth portions of the bottom

SUPERSEDED

Documents Document Sharing Hub
Full document details: SEMI E112-0304

periphery, parallel with each other, on two opposite sides, and extending at least y236 from the facial reference plane (optionally the full length) on those sides. Surfaces on these portions of the bottom periphery should be uninterrupted (ie. no notches in the surface along the bottom or the side). No other feature of the carrier may extend below the plane defined by the surfaces of the conveyor rails. The conveyor rail surfaces are bounded by x247, x248 and y236 as shown in Figure 10. Table 1 defines the dimensions for the conveyor rails.

6.14 *Inner and Outer Radii* — All required concave features may have a radius of up to *r*65 to allow cleaning and to prevent contaminant build-up. All required convex features may also have a radius of up to *r*66 to prevent small contact patches with large stresses that might cause wear and particles.

NOTE 4: These limits on the radius of all required features are specified as a maximum (not a minimum) to ensure that the required features are not rounded off too much. The lower bound on the radius is up to the carrier supplier.

NOTE 5: This radius applies to every required feature unless another radius is called out specifically. Here a required feature is an area on the surface of the carrier specified by a dimension (or intersections of dimensions) that has a tolerance and not just a maximum or minimum (such as the edges of the robotic handling flange).

7 Related Documents

7.1 *SEMI Standards*

SEMI P1 — Specification for Hard Surface Photomask Substrates

SEMI S8 — Safety Guidelines for Ergonomics Engineering of Semiconductor Manufacturing Equipment

NOTICE: Unless otherwise indicated, all documents cited shall be the latest published versions.

SUPERSEDED

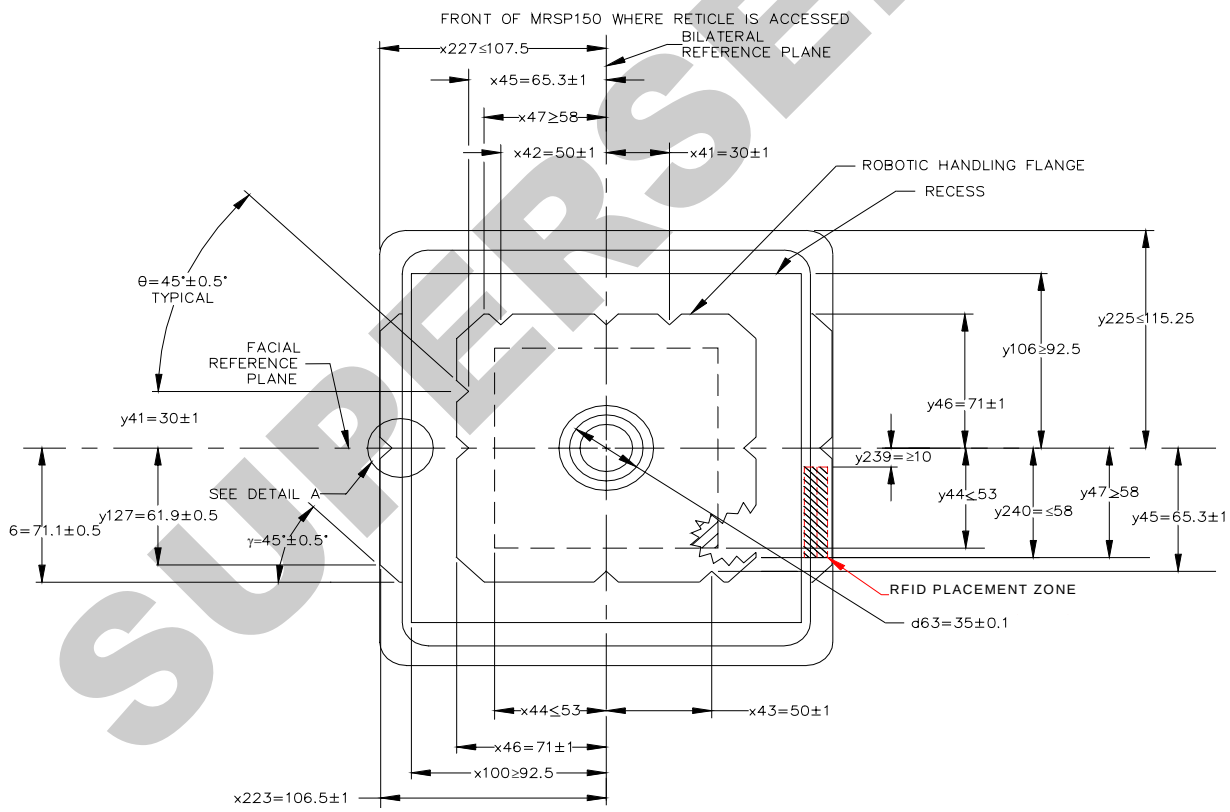

Figure 1
External Top View of MRSP150

Documents
Document Sharing Hub
Full document details: SEMI E112-0304

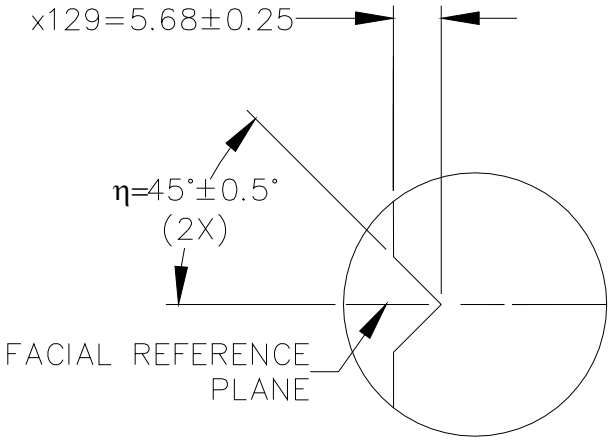

Figure 2
Detail A: External Top View of Side Handling Flange Alignment Notch

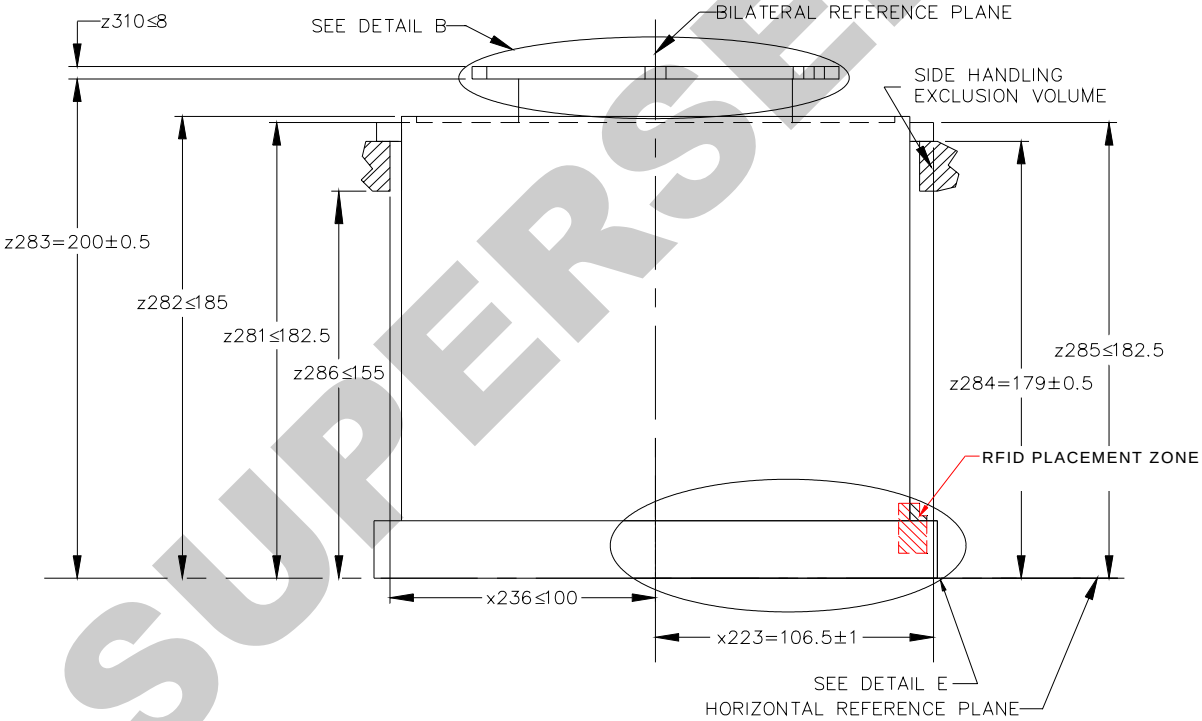

Figure 3
External Rear View of MRSP150

SUPERSEDED

Documents
Document Sharing Hub
Full document details: SEMI E112-0304