SEMI E133.1-0318 (Reapproved 0324)
SPECIFICATION FOR XML MESSAGING FOR PROCESS CONTROL SYSTEM (PCS)

This Standard was technically approved by the Information & Control Global Technical Committee. This edition was approved for publication by the global Audits and Reviews Subcommittee on December 14, 2023. Available at www.semiviews.org and www.semi.org in March 2024; originally published March 2006; previously published March 2018.

NOTICE: Paragraphs entitled 'NOTE:' are not an official part of this Standard or Safety Guideline and are not intended to modify or supersede the official Standard or Safety Guideline. These have been supplied by the global technical committee to enhance the usage of the Standard or Safety Guideline.

Table of Contents

1 Purpose 2
2 Scope 2
3 Limitations 2
4 Referenced Standards and Documents 2
5 Terminology 2
6 Conventions 2
6.1 *Documenting XML Schema with Diagrams* 2
6.2 *XML Schema Sample* 4
7 Implementation Overview 5
7.1 *XSD Overview* 5
7.2 *Point-to-Point and Daisy Chain Communication* 6
7.3 *Extending the XSD* 6
8 Generic AnalysisEngineDataSet Structure 7
9 PCS Core Elements 8
9.1 *PCSJobIDType* 8
9.2 *PCSAETargetType* 9
9.3 *DataType* 10
9.4 *StatusType* 11
9.5 *StatusElementType* 12
9.6 *AnalysisParametersType* 13
Appendix 1 PCS XSD 15

Documents Document Sharing Hub
Full document details: SEMI E133.1-0318-0324R

1 Purpose

1.1 *XML Implementation Mapping*

1.1.1 The purpose of this Specification is to provide an implementation mapping of SEMI E133, Specification for an Automated Process Control System Interface. This Specification does not provide a transport protocol for communication of XML messages between client and server (Analysis Engines).

2 Scope

2.1 This Specification utilizes XML Schema definitions per World Wide Web Consortium (W3C) recommendations.

2.1.1 This Specification provides XML Schema mapping of SEMI E133 PCS messages.

NOTICE: SEMI Standards and Safety Guidelines do not purport to address all safety issues associated with their use. It is the responsibility of the users of the Documents to establish appropriate safety and health practices, and determine the applicability of regulatory or other limitations prior to use.

3 Limitations

3.1 This Specification represents an XML aggregation model for PCS messaging. Additional specification will be necessary to represent concepts in SEMI E133 that are not covered by the current model.

4 Referenced Standards and Documents

4.1 *SEMI Standards and Safety Guidelines*

SEMI E133 — Specification for Automated Process Control Systems Interface

NOTICE: Unless otherwise indicated, all documents cited shall be the latest published versions.

5 Terminology

5.1 *Abbreviations and Acronyms*

5.1.1 *W3C* — World Wide Web Consortium

5.1.2 *XSD* — XML Schema Definition

NOTE 1: Refer to SEMI E133 for additional acronyms.

5.2 *Definitions*

5.2.1 No additional term definitions are unique to this Standard.

NOTE 2: Definitions or descriptions of terms used in this Specification may be found in the SEMI International Standards: Compilation of Terms, available on the SEMI Web site, http://www.semi.org.

6 Conventions

6.1 *Documenting XML Schema with Diagrams*

6.1.1 This Standard provides graphical representations of the included XML Schema data type and element definitions. Although no standard graphical notation for XML Schema could be found, various XML tools have their own notation. This Standard will use the notation provided by XMLSpy from Altova Corporation Figure 1 shows a sample XML Schema diagram that will be used to provide a basis for explanation of the schema graphical notation used in the rest of the Standard.

Documents
Document Sharing Hub

Full document details: SEMI E133.1-0318-0324R

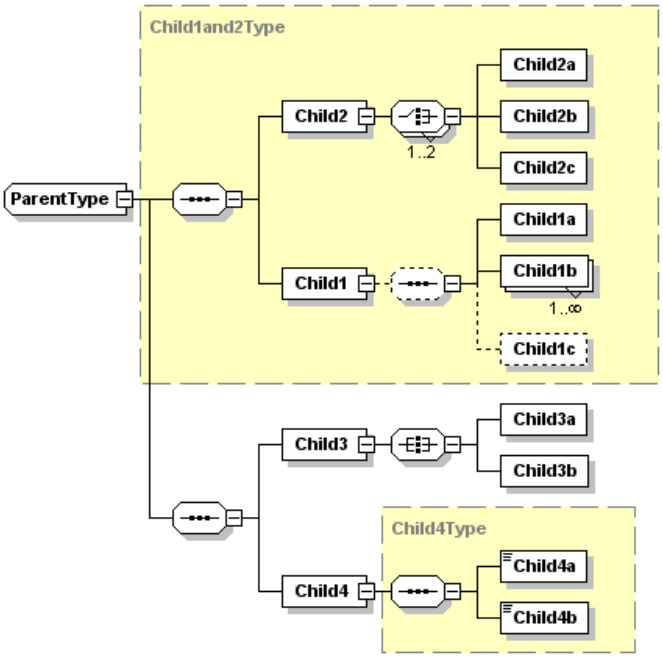

Figure 1
XML Schema Example Diagram

6.1.2 In the diagram, rectangular boxes represent XML element definitions. Ownership or containment is read from right to left in the diagrams. In the sample diagram, ParentType contains Child1, Child2, Child 3, and Child 4. In turn, Child2 contains Child2a, Child2b, and Child2c. The additional symbols (8-sided boxes) represent sequences or choices. Refer to Table 1 for an explanation of these symbols.

Table 1 Altova XMLSPY Schema Diagram Symbols

	Denotes a required ordered sequence of the right hand elements with a cardinality of one for each element. (sequence)
	Denotes an optional ordered sequence of the right hand elements with a cardinality of one for each element. (sequence)
	Denotes a required, but unordered, sequence of the right hand elements with a cardinality of one for each element. (all)
	Denotes a required choice of the right hand elements. Exactly one or two of the right hand elements must be present. (choice)
	Denotes an element.
	Denotes an element that contains parsed character data.

6.1.3 A graphic using a solid line is a required element; using a dashed line represents an optional element. Numbers or ranges in the lower right hand corner represent cardinality. The default cardinality is one.

6.1.4 To simplify a diagram or help focus on a particular aspect, detail may be hidden. The 8-sided symbols have a small square on the right end. If a minus sign '-' is in the box, then all detail is shown. If the box contains a plus sign '+', then all detail to the right of that symbol is hidden. The example has no hidden detail.

Documents Document Sharing Hub
Full document details: SEMI E133.1-0318-0324R

6.1.5 The yellow (or gray if printed in monochrome) boxes indicate the use of other defined types. So, Child4 is of type 'Child4Type'. Child4Type defines Child4a and Child4b. This detail may be hidden in the diagram. Object oriented inheritance is typically represented in XML as type extension. In Figure 1, ParentType extends Child1and2Type by adding a sequence that includes Child3 and Child4.

6.1.6 Reading Figure 1 would yield the following additional information:

1. Child1and2Type is an ordered sequence of two items: Child2 and Child1.
2. Child1 contains an optional ordered sequence of Child1a, one or more Child1b, and (optionally) Child1c.
3. Child2 contains a choice of one or two of the following: Child2a, Child2b, and Child2c.
4. Child3 contains an unordered sequence of Child3a and Child3b.

6.2 *XML Schema Sample*

6.2.1 The sample XML Schema for the example shown in Figure 1, is presented below.

Documents
Document Sharing Hub

Full document details: SEMI E133.1-0318-0324R

```xml
<?xml version="1.0" encoding="UTF-8"?>
<xs:schema xmlns:xs="http://www.w3.org/2001/XMLSchema"
elementFormDefault="qualified" attributeFormDefault="unqualified">
   <xs:element name="parentType">
      <xs:complexType>
         <xs:complexContent>
            <xs:extension base="Child1and2Type">
               <xs:sequence>
                  <xs:element name="Child3">
                     <xs:complexType>
                        <xs:all>
                           <xs:element name="Child3a"/>
                           <xs:element name="Child3b"/>
                        </xs:all>
                     </xs:complexType>
                  </xs:element>
                  <xs:element name="Child4" type="Child4Type"/>
               </xs:sequence>
            </xs:extension>
         </xs:complexContent>
      </xs:complexType>
   </xs:element>
   <xs:complexType name="Child1and2Type">
      <xs:sequence>
         <xs:element name="Child2">
            <xs:complexType>
               <xs:choice maxOccurs="2">
                  <xs:element name="Child2a"/>
                  <xs:element name="Child2b"/>
                  <xs:element name="Child2c"/>
               </xs:choice>
            </xs:complexType>
         </xs:element>
         <xs:element name="Child1">
            <xs:complexType>
               <xs:sequence>
                  <xs:element name="Child1a"/>
                  <xs:element name="Child1b" maxOccurs="unbounded"/>
                  <xs:element name="Child1c" minOccurs="0"/>
               </xs:sequence>
            </xs:complexType>
         </xs:element>
      </xs:sequence>
   </xs:complexType>
   <xs:complexType name="Child4Type">
      <xs:sequence>
         <xs:element name="Child4a" type="xs:string"/>
         <xs:element name="Child4b" type="xs:string"/>
      </xs:sequence>
   </xs:complexType>
</xs:schema>
```

Figure 2
XML for Sample

7 Implementation Overview

7.1 *XML Schema Definition (XSD) Overview*

7.1.1 The XSD is documented in the E133-1-V0717-PCSAE-Schema.xsd file. This file is the authoritative definition of SEMI E133.1. This Standard elaborates on the purpose and use of the structures defined in the E133-1-V0717-PCSAE-Schema.xsd file.

Documents Document Sharing Hub
Full document details: SEMI E133.1-0318-0324R