SEMI E158-0212
MECHANICAL SPECIFICATION FOR FAB WAFER CARRIER USED TO TRANSPORT AND STORE 450 mm WAFERS (450 FOUP) AND KINEMATIC COUPLING

This Standard was technically approved by the global Physical Interfaces & Carriers Technical Committee. This edition was approved for publication by the global Audits and Reviews Subcommittee on December 24, 2011. Available at www.semiviews.org and www.semi.org in February 2012; originally published July 2010; previously published November 2010.

SUPERSEDED

1 Purpose

1.1 The purpose of this Document is to establish basic physical dimensions for the carriers intended to be used to transport and store 450 mm wafers, as specified by SEMI M74, within semiconductor device manufacturing facilities.

1.2 This Document is intended to define the reference planes for the dimensions of the carriers and the load port features that will interact with the carriers.

1.3 This Document is intended to define a set of requirements to ensure interoperability of load ports and carriers without limiting innovative solutions.

2 Scope

2.1 This Document specifies the external features and dimensions of the 450 mm carrier.

2.2 This Document specifies the interior exclusion volumes for supporting and restraining wafers in the 450 mm carrier.

2.3 This Document specifies the critical dimensions and locations of the kinematic coupling pins (KCPs) that will support and position the 450 mm carriers.

2.4 This Document defines three orthogonal reference planes as references for carrier dimensions.

NOTICE: SEMI Standards and Safety Guidelines do not purport to address all safety issues associated with their use. It is the responsibility of the users of the Documents to establish appropriate safety and health practices, and determine the applicability of regulatory or other limitations prior to use.

3 Limitations

3.1 The detailed methods and mechanisms inside a 450 FOUP door as to how a carrier door may be engaged to and disengaged from the carrier shell are not specified by this Document.

4 Referenced Standards and Documents

4.1 *SEMI Standards and Safety Guidelines*

SEMI E144 — Specification for RF Air Interface Between RFID Tags in Carriers and RFID Reader in Semiconductor Production and Material Handling Equipment

SEMI M74 — Specification for 450 mm Diameter Mechanical Handling Polished Wafers

NOTE 1: The SEMI global Physical Interfaces & Carriers Technical Committee is developing a Mechanical Interface Specification for 450 mm Load Ports intended to be used in conjunction with this Document.

4.2 *ISO Standards*[1]

ISO 4287 — Geometrical Product Specifications (GPS) – Surface Texture: Profile Method – Terms, Definitions and Surface Texture Parameters

[1] International Organization for Standardization, ISO Central Secretariat, 1 rue de Varembé, Case postale 56, CH-1211 Geneva 20, Switzerland; Telephone: 41.22.749.01.11, Fax: 41.22.733.34.30, http://www.iso.ch

Documents Document Sharing Hub
Full document details: SEMI E158-0212

NOTICE: Unless otherwise indicated, all documents cited shall be the latest published versions.

5 Terminology

5.1 *Abbreviations and Acronyms*

5.1.1 *BP* — bilateral plane

5.1.2 *CL* — centerline

5.1.3 *EE* — end effector

5.1.4 *FOUP* — front-opening unified pod

5.1.5 *FP* — facial plane

5.1.6 *HP* — horizontal plane

5.1.7 *KC* — kinematic coupling

5.1.8 *KCP* — kinematic coupling pin

5.1.9 *OHT* — overhead hoist transport

5.1.10 *RFID* — radio frequency identification

5.1.11 *TIR* — total indicator runout

5.2 *Definitions*

5.2.1 *450 FOUP* — used generally as a 'term' only within this Document to identify the front-opening carrier used in fabs for 450 mm wafers.

NOTE 2: Unless otherwise specified, the word 'carrier' used herein shall mean 450 FOUP.

5.2.2 *bilateral plane (BP)* — a vertical plane, defining $x=0$ of a system with three orthogonal planes (HP, BP, FP), coincident with the nominal location of the rear primary KCP, and midway between the nominal locations of the front primary KCPs.

5.2.3 *centerline (CL)* — a horizontal line centered vertically on the carrier door used as the reference for z dimensions of door features.

5.2.4 *facial plane (FP)* — a vertical plane, defining $y=0$ of a system with three orthogonal planes (HP, BP, FP), $y33=194 \pm 0$ mm in front of the nominal location of the rear primary KCP.

5.2.5 *front (of carrier)* — the part of the carrier closest to the door.

5.2.6 *horizontal plane (HP)* — a horizontal plane, defining $z=0$ of a system with three orthogonal planes (HP, BP, FP), coincident with the nominal location of the uppermost points (tips) of the three KCPs.

5.2.7 *nominal location* — the value a dimension would have if its tolerance were reduced to zero.

5.2.8 *nominal wafer seating plane* — a horizontal plane that bisects the wafer pickup volume. [SEMI E1.9]

5.2.9 *origin* — the intersection of the BP and FP.

5.2.10 *plane* — a theoretical surface which has infinite width and length, zero thickness and zero curvature.

5.2.11 *rear (of carrier)* — the part of the carrier farthest from its door.

5.2.12 *wafer deflection* — change in wafer shape (TIR) due to gravity while the wafer is resting on the carrier wafer supports with the carrier door open.

5.2.13 *wafer extraction volume* — the open space for extracting a wafer from the cassette.

5.2.14 *wafer mapping exclusion volume* — a space inside the carrier reserved for break-the-beam type wafer mapping.

5.2.15 *wafer pick-up volume* — the space that contains entire bottom of a wafer if the wafer has been pushed to the rear of the cassette.

SUPERSEDED

Documents
Document Sharing Hub
Full document details: SEMI E158-0212

5.2.16 *wafer seating plane* — the bottom surface of an ideally rigid flat disk that meets the diameter specification for 450 mm wafers, with negligible droop due to gravity, as it rests on the wafer supports.

5.2.17 *wafer set-down volume* — the open space for inserting and setting down a wafer in the cassette.

6 Reference Planes (HP, FP, BP) Specification

6.1 The HP, FP, and BP as described in the definition section are ideal planes, which are intended to be used to depict the position of certain features relatively to these planes. These planes are at position zero (x, y, z) with no tolerance associated, since these ideal planes do not represent a physical feature.

NOTE 3: The top surfaces of the KCPs are not the surfaces on which the carrier rests. Appendix 1 shows how test fixtures can be made to rest on the KCPs to duplicate the position of a carrier.

6.2 FP and BP are defined as vertical planes and ideally are parallel to the gradient of the gravity field. All three planes are mutually perpendicular. Only positive numbers are used to define coordinates within this system of three planes. No negative numbers are used in order to be as close as possible to standard mechanical drawing practices. Necessary clarification on the position of a feature usually will be achieved via figures.

NOTE 4: For best understanding, the definitions of the reference planes should be read in the order HP, BP, FP.

6.3 *Reference Baselines* — One centerline (CL) is defined:

- CL for the carrier door. It passes through the centers of the openings for the door pins. All the z-dimensions of door features are symmetric to the CL.

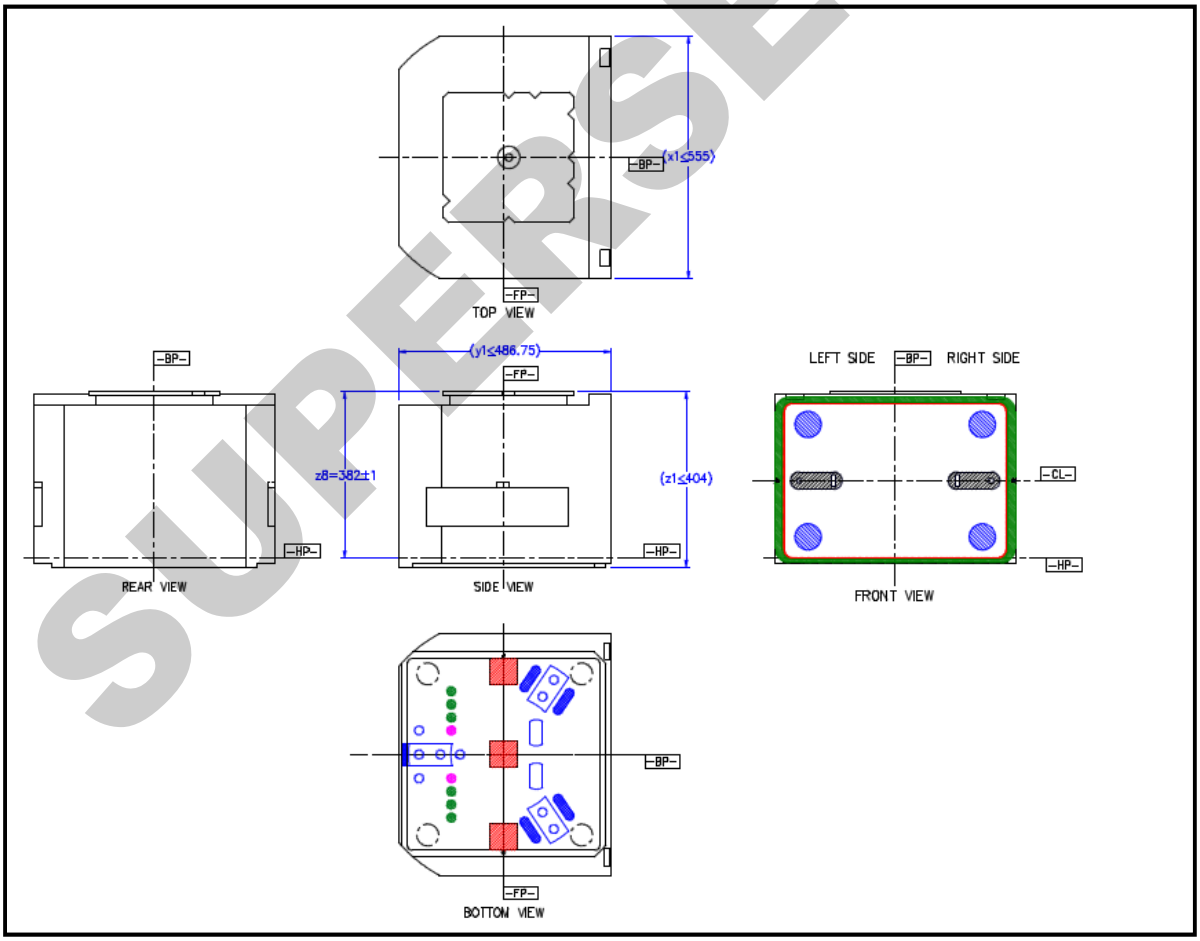

Figure 1
Overall Views of 450 FOUP

SUPERSEDED

Documents Document Sharing Hub
Full document details: SEMI E158-0212

7 Requirements for Carrier Envelope

7.1 The overall dimensions of the 450 FOUP, *(x1), (y1), and (z1),* are given as reference dimensions because they are derived from other dimensions. See Table 2.

- $(x1) \leq x2 + x2$
- $(y1) \leq y2 + y4_{max}$
- $(z1) \leq z8_{max} + z11$

8 Requirements for Features for Automated Handling

8.1 *Automation Flange* — On top of the 450 FOUP is an automation flange for manipulating the carrier. See Figure 2 (top view) and Figures 3, 4 and 5 (sections).

8.1.1 The automation flange shall be centered in front of the FP. Its orientation and location are constrained by *x4* and *y12*. See Figure 6.

8.1.2 The center of the flange is located *x63* and *y54* relative to its side and front respectively. The flange shall have a centering feature at its center. The centering feature shall have a depth of *z2,* diameter of *d3* at the top surface, and *(d2)* at the bottom. The side of the centering feature shall have an angle of *θ4*.

8.1.3 The flange shall extend back from its front side by *y3*, and shall extend from its right side (as viewed from the front of the carrier) to the opposite side by *x3*. The neck below the flange shall extend *x34* to each side of the BP, and shall extend *y37* in front of the FP and *y56* behind the FP.

8.1.4 The flange has a pattern of notches on all sides. Notches on the front and back have a depth of *y31* and those on the sides shall have a depth of *x56*. The notches shall have an angle of *θ5*. The four corners shall have chamfers with size of *x32* and *y28*. Notches are located at *x30*, *x31*, *x63* on the front and *x33* on the back, and at *y29* on the right side and at *y54* on both the right and left sides. The flange shall have a thickness of *z13*, and the carrier shall have no obstructions around the flange for a height of *z9*, except for the door frame as shown by *y30* in Figure 4.

8.1.5 The presence sensing feature on the top surface of the automation flange consists of an area bounded by *d3* and *d8*. The feature is designed to provide a flat surface for presence sensing and is located *z8* above the HP.

SUPERSEDED

Documents
Document Sharing Hub
Full document details: SEMI E158-0212

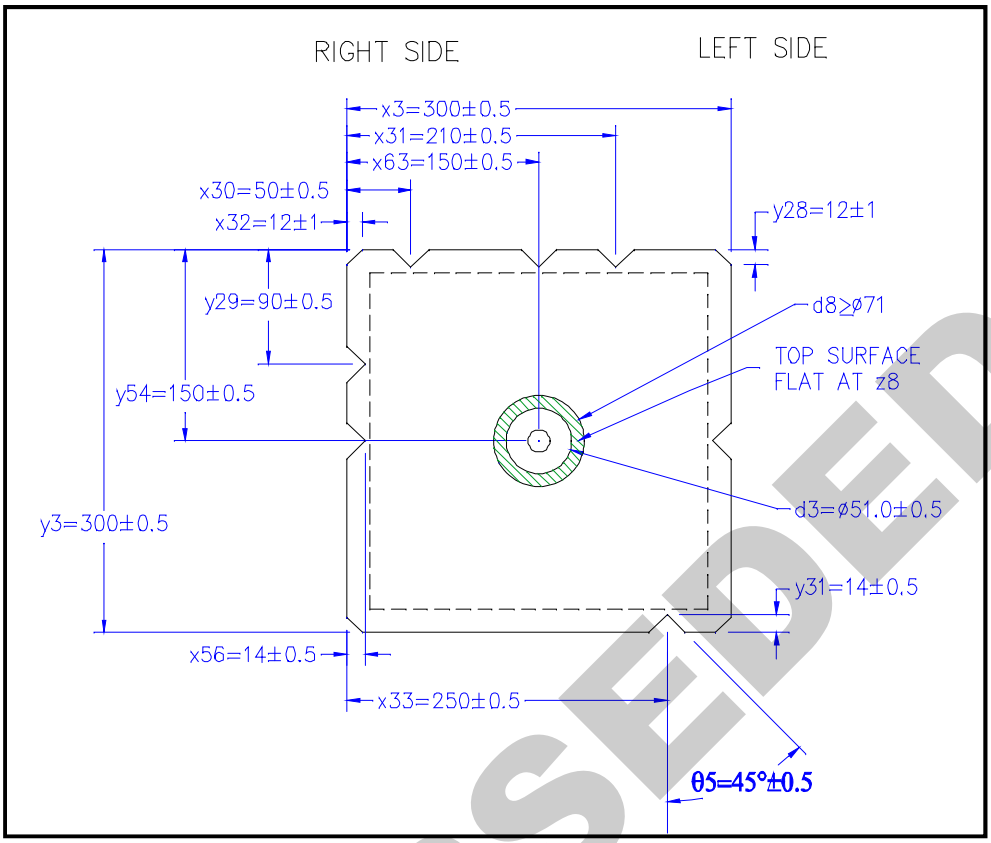

Figure 2
Automation Flange – Top View

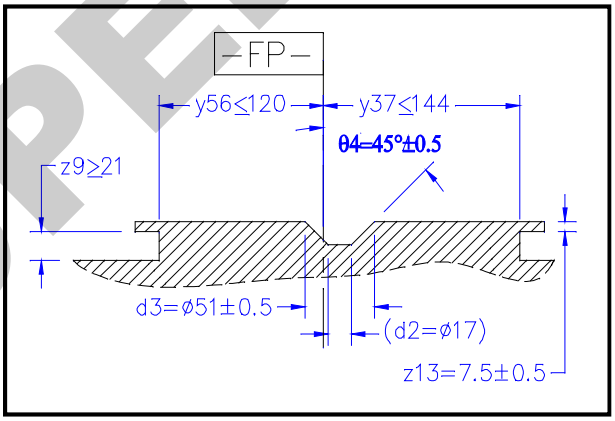

Figure 3
Automation Flange Section at BP

SUPERSEDED

Documents Document Sharing Hub
Full document details: SEMI E158-0212

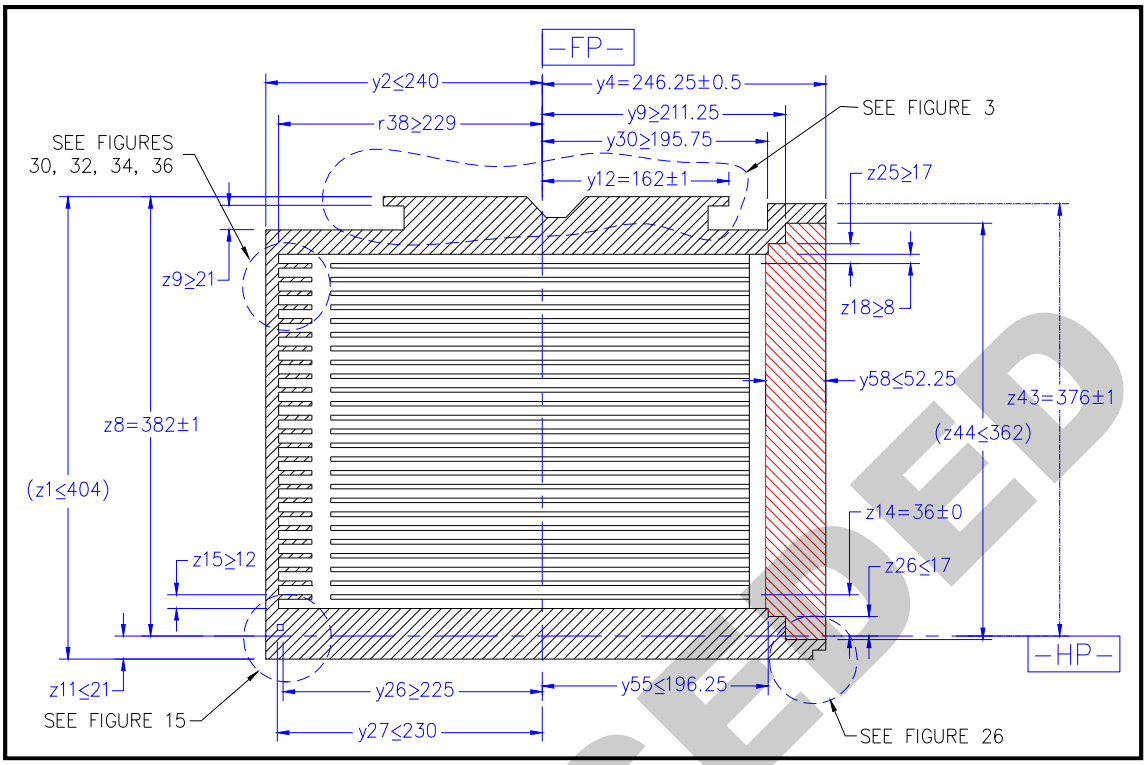

Figure 4
Carrier Section at BP

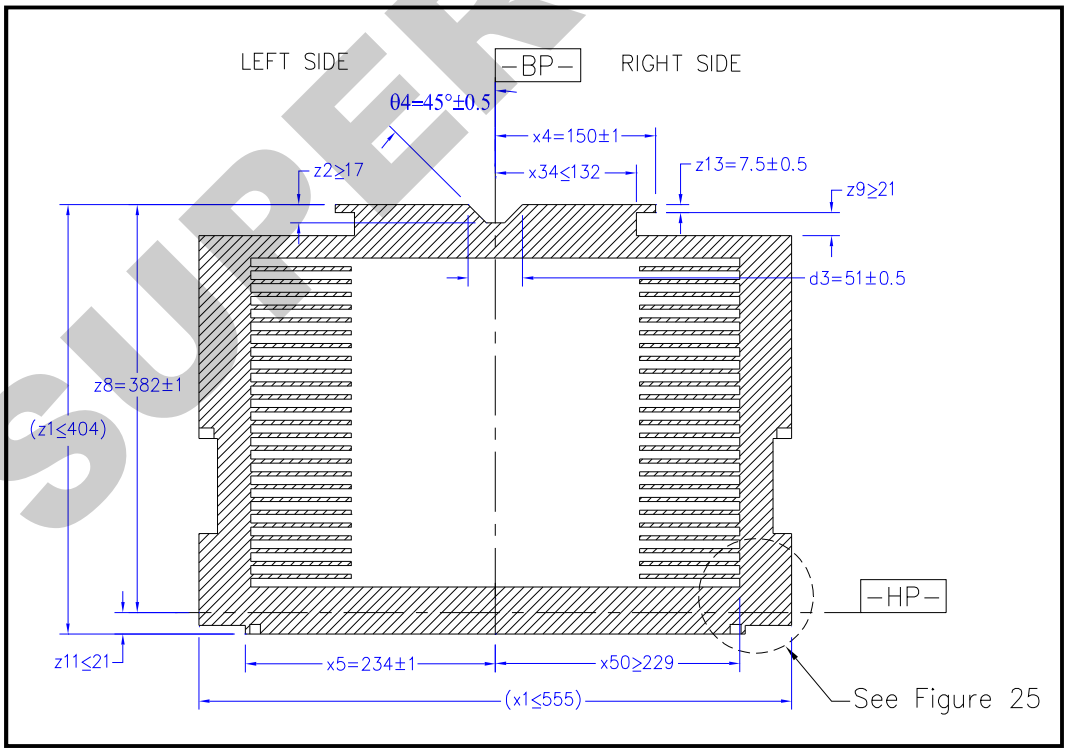

Figure 5
Carrier Section at FP

SUPERSEDED

Documents
Document Sharing Hub
Full document details: SEMI E158-0212

8.2 *Center of Gravity Volume* — The carrier's center of gravity in *x* and *y* direction with the door closed shall be in front of the FP and within a cylinder of radius *r20* from a point on the BP at *y36*. The center of gravity shall be within this volume whether the carrier is empty, partly filled with wafers, or fully occupied. See Figure 6.

8.2.1 Appendix 3 describes a method for measuring the location of the center of gravity.

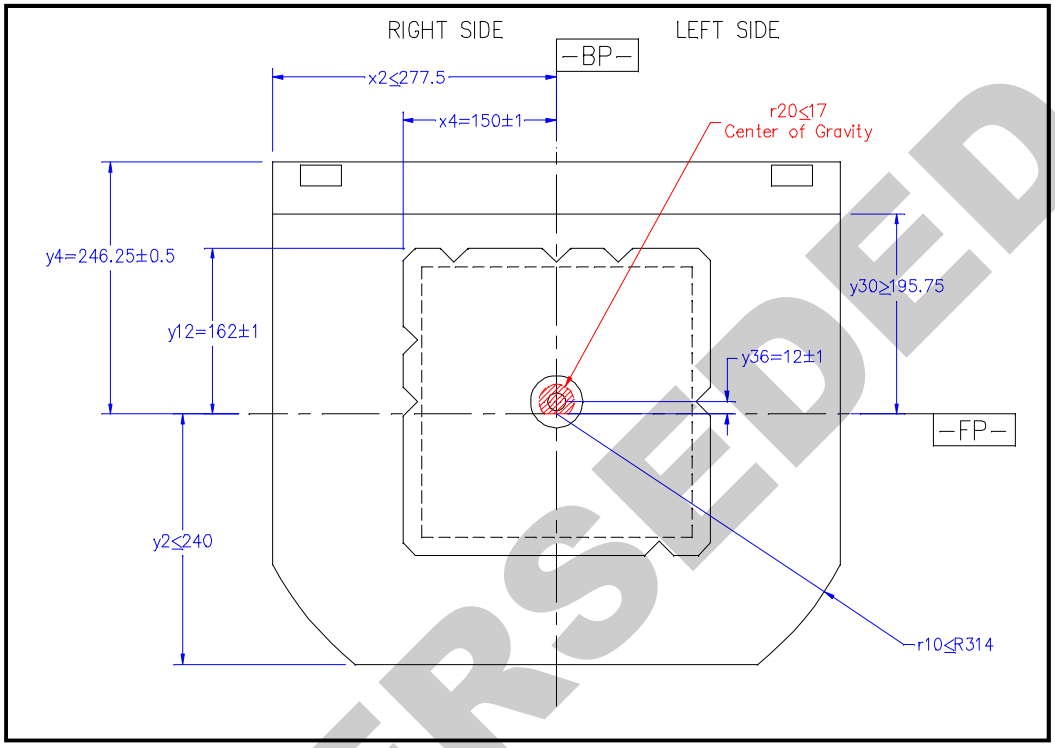

Figure 6
Automation Flange Location

8.3 *Forklift Feature* — The 450 FOUP shall have features on the sides for handling by forklift, shown in Figure 7. The forklift feature includes a notched indentation for a pin to retain the carrier on the forklift.

8.3.1 On each side of the carrier, there shall be an opening to the rear extending vertically from *z35* to *z19*, and forward to *y45*. The horizontal surface at *z19* shall extend from *y45* to *y46*. There shall be no obstruction at the top of the opening to the rear of *y46*. The surface at *z19* shall extend from *x17* to the surface at *x66*. There shall be notches at the FP with a height of *z20*, a depth of *x35* and an angle of *θ6*.

8.3.2 There shall be a vertical surface extending a distance *z20* above *z19* at *x66* from the BP, from *y45* at the front and without any obstruction to the back of the carrier.

8.4 *Front Clamp Features* — The 450 FOUP shall have provision for being clamped at the front of the carrier on vertical surfaces located behind the door frame.

8.4.1 There shall be two front clamping features on the top of the carrier. Each is a rectangular hole with a depth of *z5*, and is bounded by *x15* and *x16*, and by *y43* and *y44*. See Figure 7.

8.4.2 There shall be two front clamping features on the bottom of the carrier. Each is a rectangular hole with a depth of *z36* and is bounded by *x57* and *x58*, and by y*47* and *y48*. See Figure 27.

NOTE 5: It is recommended that the front clamp features not be used for pulling the FOUP from the undocked position into the FIMS interface. All of the dimensions of the 450 FOUP (such as the wafer location, etc.) are defined with reference to the KCPs, and will be in the proper location only when the 450 FOUP is held in place on the KCPs only by gravity.

SUPERSEDED

Documents Document Sharing Hub
Full document details: SEMI E158-0212

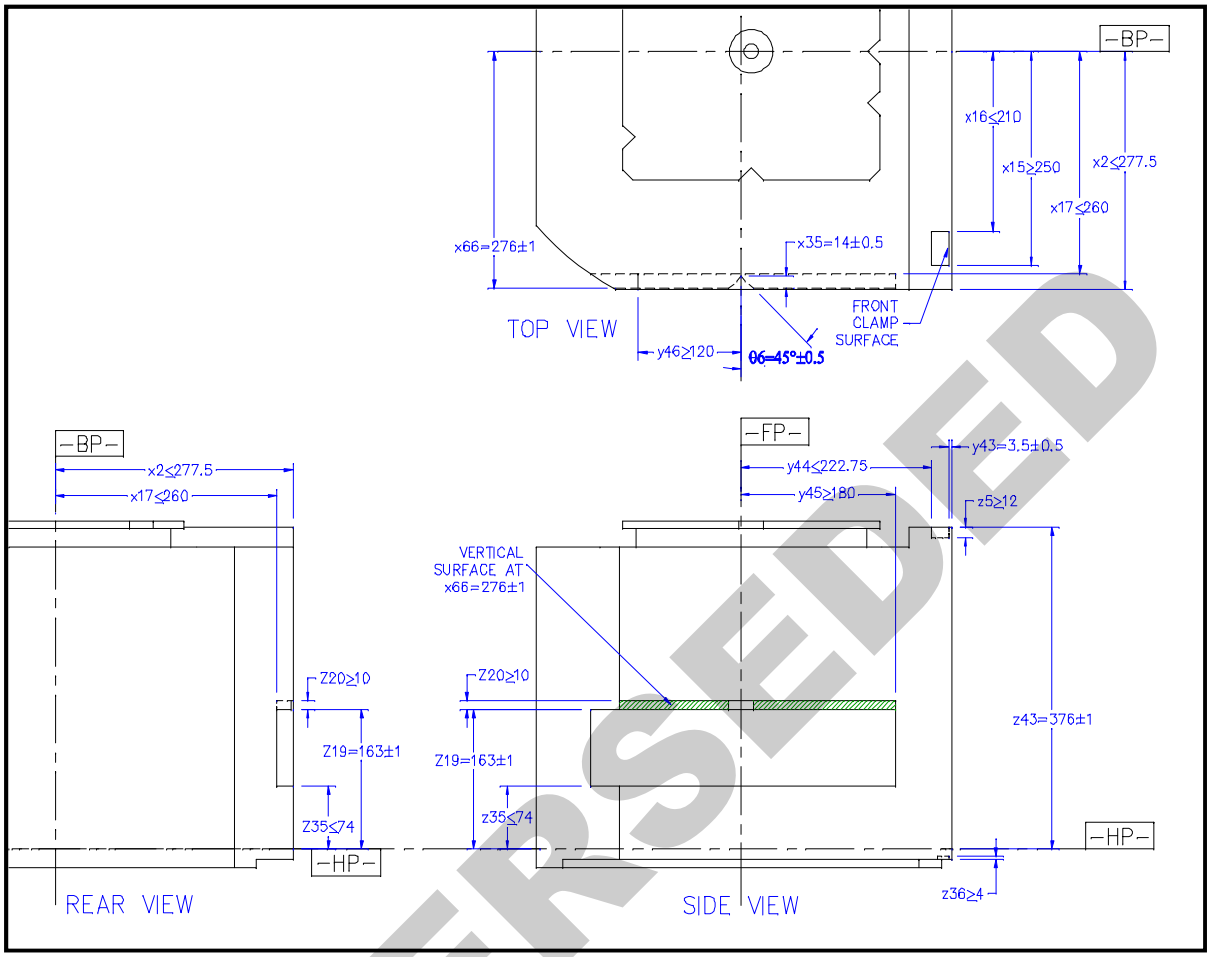

Figure 7
Front Clamp and Forklift Features

8.5 *Manual Handling* — A fully-loaded 450 mm FOUP will be too heavy for manual handling during normal production or maintenance activities. It is anticipated that manual handling will only occur when recovering from an abnormal situation. Consequently, there is no provision for manual handles.

8.6 *Conveyor Rails* — See § 15.

9 Requirements for KCPs

9.1 *KCP Shape* — The physical alignment interface on the bottom of the wafer carrier consists of features (specified in § 10) that mate with six pins underneath. As shown in Figure 8 and defined in Table 1, each pin is radially symmetric about its vertical center axis line and can be seen as the intersection of a cylinder of radius *r1* and a sphere of radius *r4* (which establishes the tip of the pin and might contact a flat plate). The radius *r4* is centered on the axis of symmetry at a height *z3* below the HP. An additional radius *r3* establishes the contact with the angled mating groove surface on the carrier. The center of the radius *r3* is defined by the intersection of a vertical plane through the axis of symmetry of the pin with the horizontal circle of radius *r2* at the height *z4* below the HP. A blend radius of *r5* is applied at the intersection of *r1* and *r3*, and at the intersection of *r3* and *r4*. The minimum height of the pin is given by *z4*. R_a1 is the surface finish roughness, as defined by ISO 4287, of all features defined by *r1*, *r3*, *r4*, and *r5*. Dimensions *r2*, *z3*, and *z4* have zero tolerance because they only define offsets and not physical features.

9.2 *KCP Locations* — The KCPs are arranged in three sets with two pins in each set, as shown in Figure 11. The outer pins of each set are designated the primary pins for use on a load port or vehicle nest, and the inner pins are

SUPERSEDED

Documents
Document Sharing Hub
Full document details: SEMI E158-0212

designated the secondary pins for use on a robotic arm used to pick up a carrier from the primary pins. The rear pins (farthest from the door) are located on the BP, at a distance from the FP of *y18* for the secondary pin and *y15* for the primary pin. The front primary pins are located at a distance of *y16* from the FP, symmetric across the BP with distance *x18* from the BP. The front secondary pins are located at a distance of *y17* from the FP, symmetric across the BP with distance *x19* from the BP. For reference only, the front KCPs are located symmetrically with respect to the BP at an angle of *(θ2),* and circumferentially equidistant on a circle about the origin with radius *(r22)* for the primary KCPs and radius *(r26)* for the secondary KCPs. For reference only, the rear primary kinematic pin is located on the BP and on a circle with radius *(r27)*, and the secondary rear pin is located on the BP and on a circle with radius *(r16)*. See Figure 11.

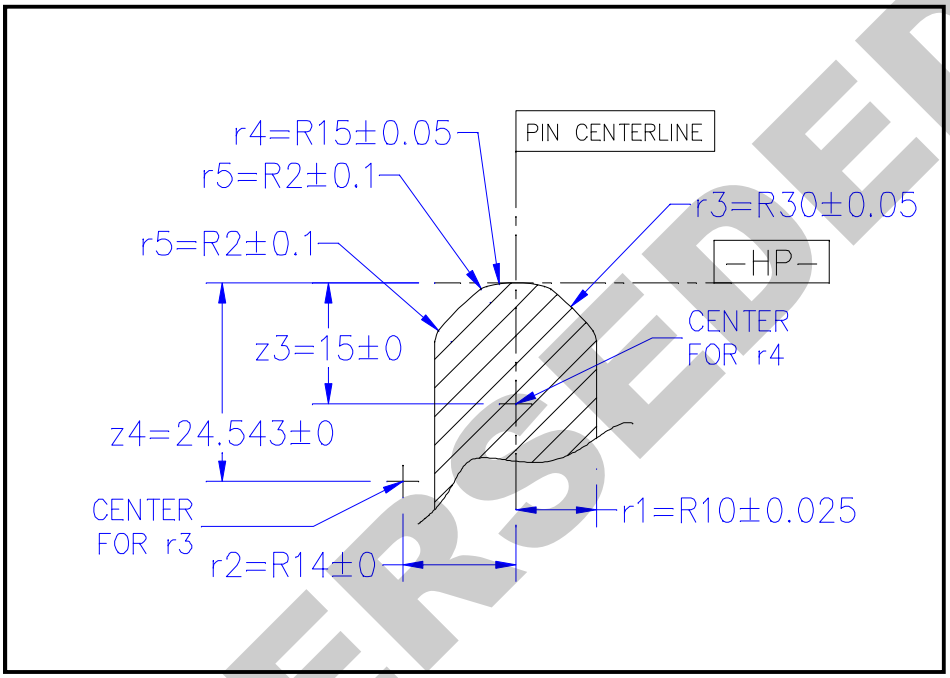

Figure 8
KCP

10 Requirements for KC Groove

10.1 In order to achieve the proper lead-in value of *r15* and control contact pressures, certain characteristics of the kinematic groove surface on the bottom of the 450 FOUP are described in this section and shown in Figures 9 and 10.

10.2 *KC Groove Locations* — Grooves shall be provided to capture both primary and secondary pins locations. The CLs of the grooves are located along radii passing through the kinematic pin locations from the origin. The rear groove has its CL along the BP, while the two front grooves have their CLs at the angle *(θ2)* with respect to the FP.

10.3 *KC Groove Shape and Finish* — When viewed along the axis of symmetry of the groove (parallel to the HP), the angle of each wall shall be *θ1* to the vertical. The height of the groove at the opening shall be *z11* beneath the HP. The shape and surface finish of the groove shall ensure that the carrier will seat fully onto the KCPs when there is an offset (lead-in error) of *r15*, allowing an empty, partially filled or full carrier to seat completely on the KCPs so long as it is placed on the load port within *r15* from nominal. See Figure 10.

10.4 *KC Groove Length* — In order to ensure capture of either the primary or secondary KCP during a physical handoff with an offset (lead-in error) of *r15*, along the length of the groove, a minimum groove length is specified. The innermost end of the front KC grooves shall be no farther than *r8* from the origin, and the outermost end of the grooves shall be no closer than *r24* from the origin. The innermost end of the rear KC groove shall be no farther than

SUPERSEDED

Documents Document Sharing Hub
Full document details: SEMI E158-0212

r33 from the origin, and the outermost end of the groove shall be no less than *r9* from the origin. The KC grooves shall not interfere with the edge of the conveyor rail or other exclusion features. See Figures 10 and 11.

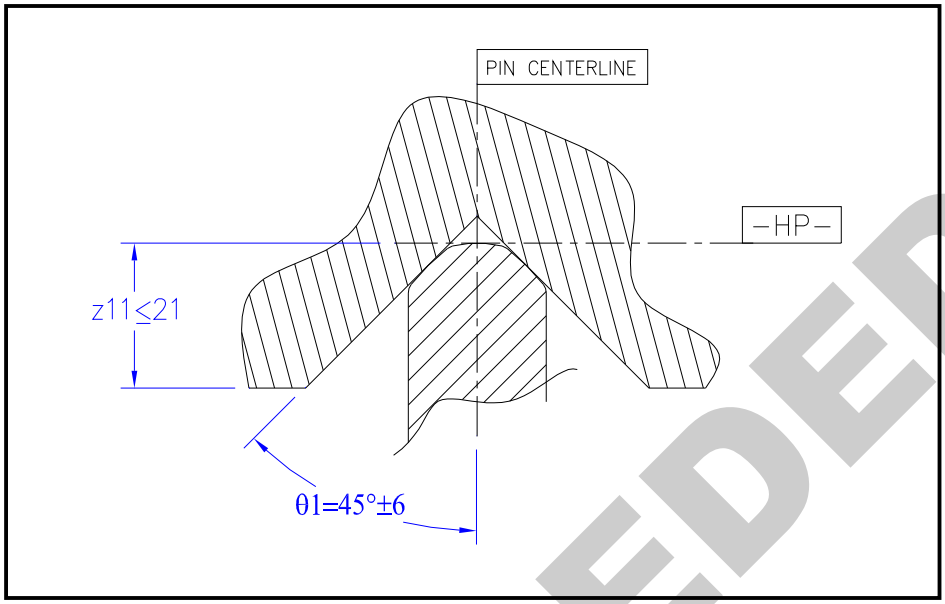

Figure 9
KC Groove

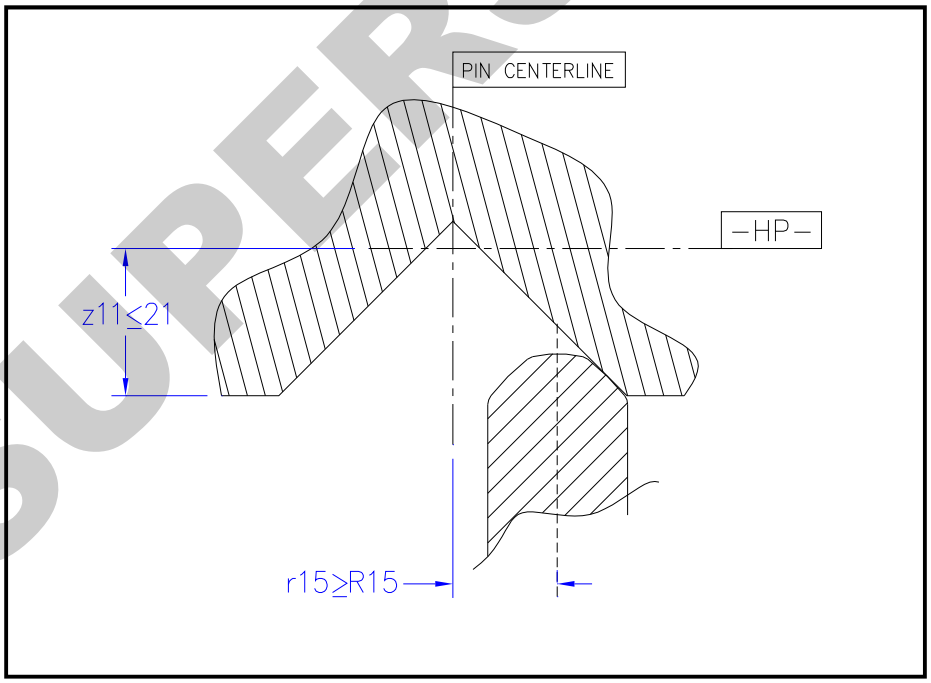

Figure 10
KC Offset

SUPERSEDED

Documents
Document Sharing Hub
Full document details: SEMI E158-0212

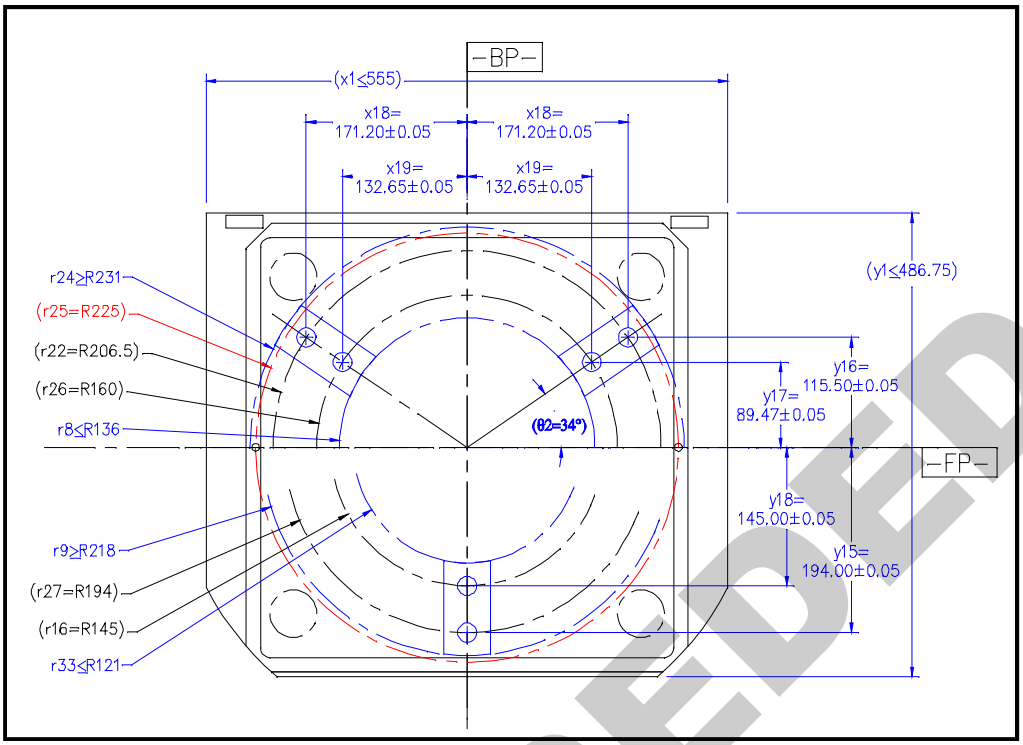

Figure 11
Bottom View – KCP Locations

11 Requirements for Bottom Surface Features

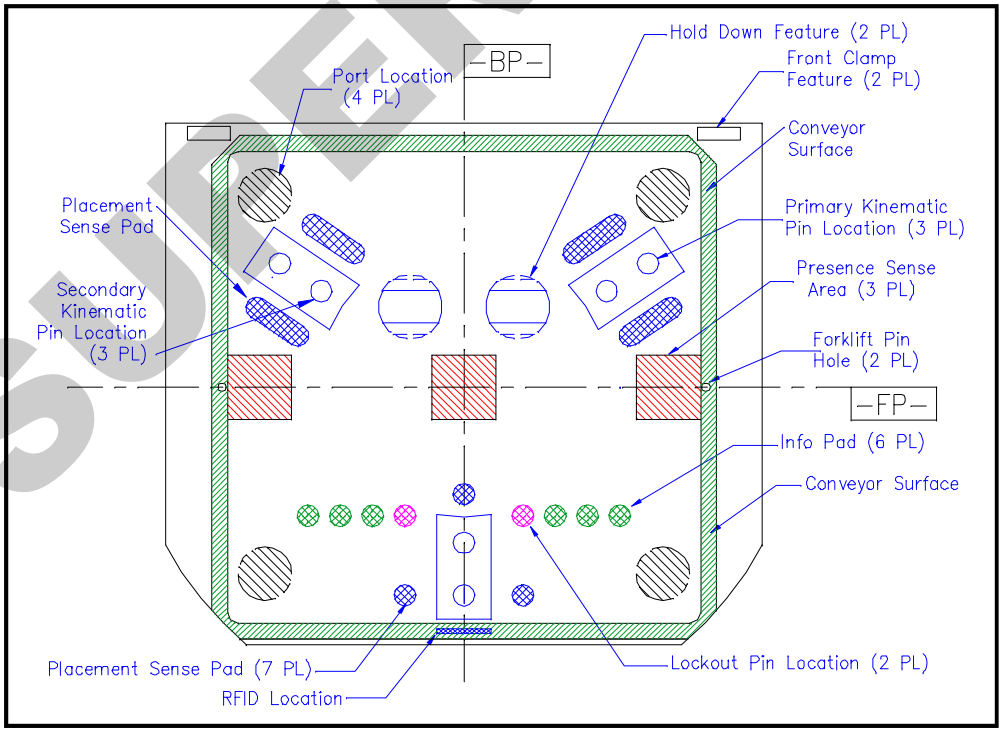

Figure 12
Bottom Features

SUPERSEDED
Documents
Document Sharing Hub
Full document details: SEMI E158-0212

11.1 *Presence Sensor Feature*

11.1.1 The presence sensing features on the bottom of the 450 FOUP are designed to provide three flat, opaque areas for sensing. The load port or other systems using KCPs can use the features to determine that a carrier is present, even if misplaced (see the discussion in the Related Information 5). The features consist of three flat, opaque areas centered along the FP of the carrier within the conveyor rails and extending *y21* to the front and rear of the FP. The center area extends *x22* to each side of the BP, and the outer areas extend from *x20* to *x9*. The vertical location of the presence sense areas is *z29* below the HP. See Figures 13 and 14.

11.2 *Placement Sensor Features*

11.2.1 Placement sensing features are intended to provide defined locations to confirm proper placement of the KC grooves onto the KCPs. These consist of a set of four elongated and three circular flat areas. The elongated flat areas are located symmetrically to the front KCPs, with the outer center at approximately the same distance from the origin (at *x21* and *y22*), the distance from the outer to inner centers is approximately the same as the distance between the primary and secondary KCPs. Two of the circular flat areas are located on either side of the rear secondary KCP, and the third is in front of the rear KCPs, for use with forklifts. The flat areas shall be at a height of *z23*. Because the KCPs are not symmetrical, this configuration allows fail-safe sensing of the carrier placement. See Figures 13 and 14.

11.3 *Info Pads and Mechanical Lockout Features*

11.3.1 The info pads and mechanical lockout features of the 450 FOUP are located symmetrically about the BP, with one row of three info pads and one mechanical lockout feature on each side. From the carrier side, there is no difference between the info pads and mechanical lockout features. On the load port side, the optional mechanical lockout pins will be separate from the sensing info pads. As with the placement sensing pads, the info pad features have a radius of *r21* mm (flat or hole per customer option). The flat surface shall be at *z50* below the HP, (with a more relaxed tolerance than *z23)*. Hole 'depth' shall be at *z24*. For the mechanical lockout feature, the flat must be capable of supporting a fully loaded FOUP.

11.3.2 The info pads and mechanical lockout features are located *y24* from the FP, and symmetrically about the BP at distances of *x24*, *x25*, *x26*, and *x27* from the BP. The two features nearest the BP are reserved for mechanical lockout; the other six are reserved for info sensors only (no mechanical lockout pins). The lockout pads are numbered (1 and 2) and the info pads are lettered (A thru F) to highlight that the info pads and lockout pins are not intended to be interchangeable.

11.3.3 The info pads and lockout features are end user selectable. See Related Information 1, § R1-3 for an example of how they may be specified.

SUPERSEDED

Documents
Document Sharing Hub
Full document details: SEMI E158-0212

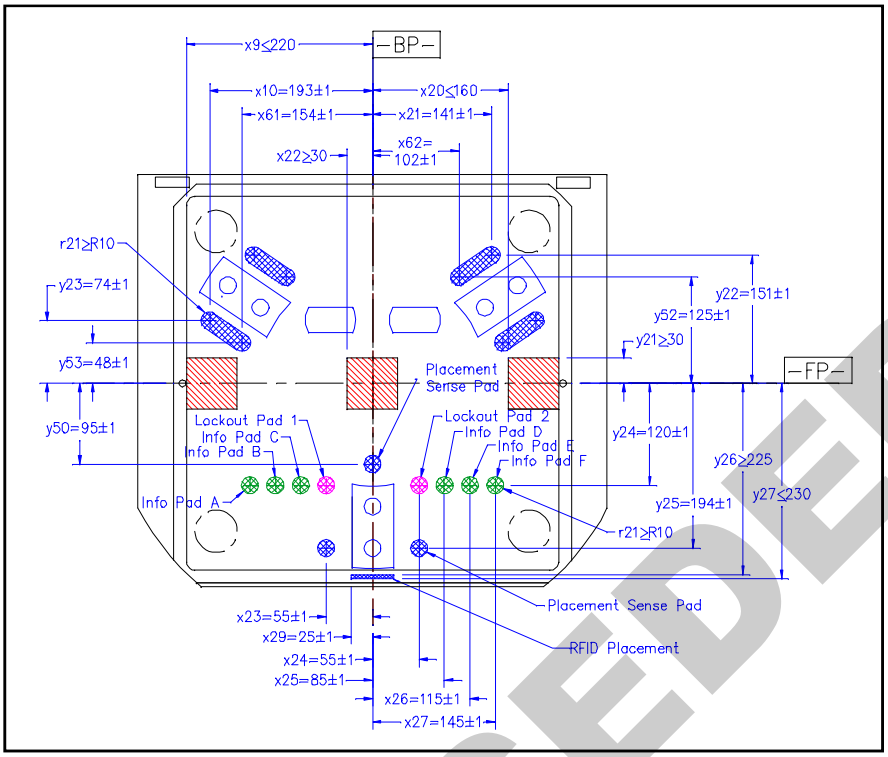

Figure 13
Bottom View of Presence, Placement, Info Pads and RFID Tag Placement

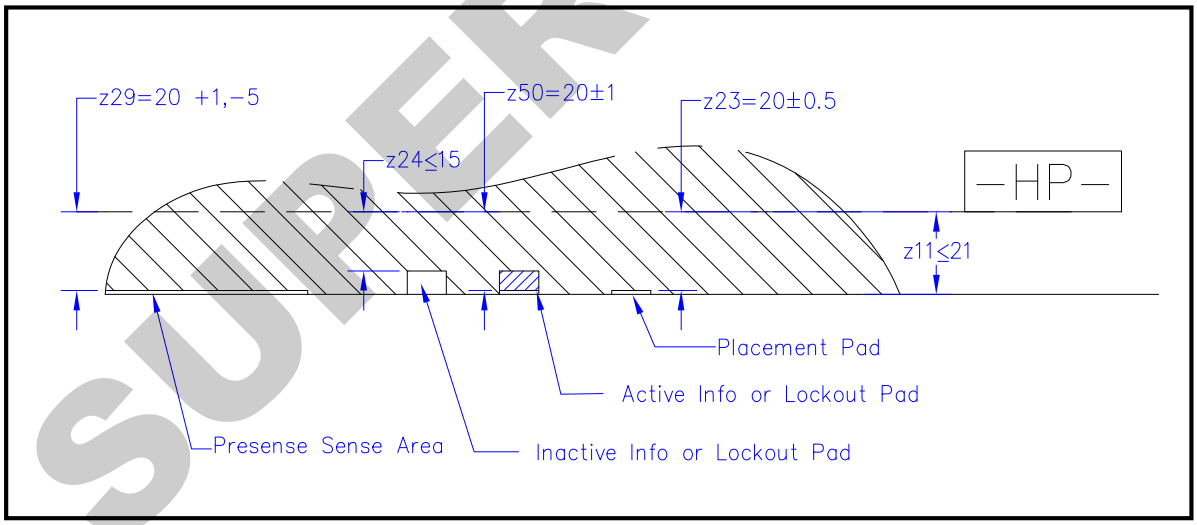

Figure 14
Sensor Pad and Hole Cross-Section

12 Requirement for RFID Tag Placement Volume

12.1 The RFID tag placement volume specifies the volume where an RFID tag can be placed. The entire RFID tag, if present, must be placed within the volume defined by *x29, y26, y27, z37* and *z38* as shown in Figures 13 and 15.

NOTE 6: SEMI E144 provides specifications for the required elements of RFID tags.

SUPERSEDED

Documents Document Sharing Hub
Full document details: SEMI E158-0212

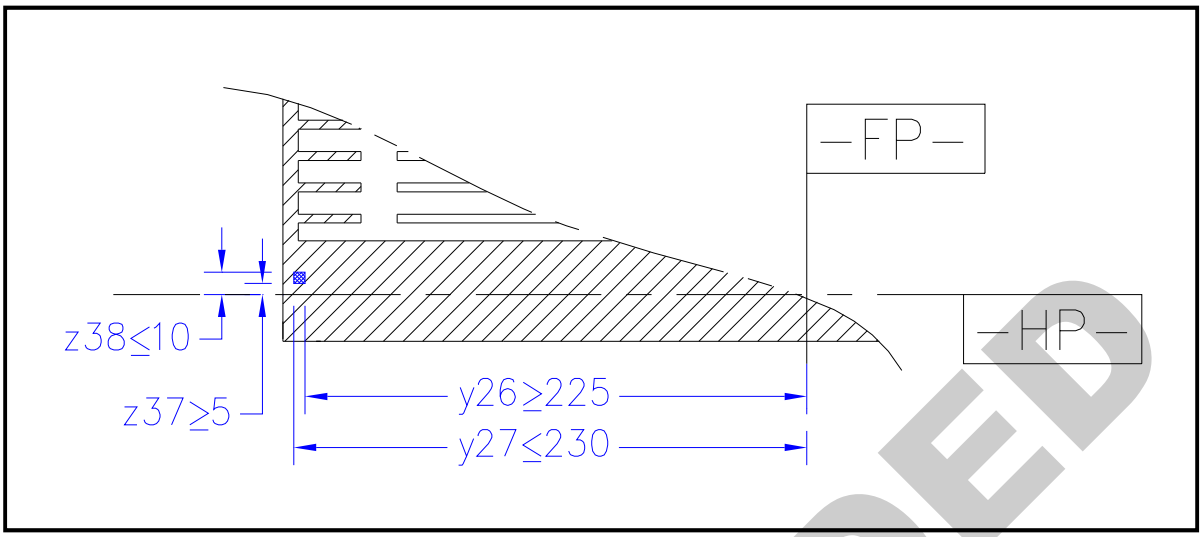

Figure 15
RFID Tag Placement Volume

13 Requirements for Carrier Hold-Down Features

13.1 The hold-down features are provided by a pair of structures located symmetrically about the BP and slightly closer to the FP than the front KCPs. Each feature consists of cylindrical volume centered at *x28* and *y38* with top and bottom surfaces at HP and *z6* with radius *r7*. Each volume has an opening to the bottom of the carrier bounded by *y34, y35* and *r7*. From the bottom of the opening, a vertical surface of height *z7* joins (with a small but unspecified blend radius) a sloping plane of angle *θ3* above the horizontal (and parallel to the intersection of FP and HP). This sloping plane meets the surface at *z6*. See Figures 16 and 17.

13.2 This configuration provides the load port with several options for holding the carrier in place not limited to the following:

- A hook shape that presses against the slope and the shelf, or
- A tee shape that passes through the rectangular opening and rotates to press down on the shelf and/or the sloping plane with or without contacting the incline. See Figure 18.

13.2.1 Either (each) hold-down feature shall be able to withstand a force in any direction of *f001* without permanent damage or deformation.

13.2.2 Door opening and closing shall operate correctly with a force of *f002* applied to either (each) hold-down feature. The carrier must withstand this force without impact on its intended function.

NOTE 7: The force generated at the bottom hold down feature is related to the wafer retention forces and the door sealing forces that occur during the door insertion and removal operation. Carrier suppliers should consider the maximum force generated in their carrier design when designing the carrier's hold down feature.

SUPERSEDED

Documents
Document Sharing Hub
Full document details: SEMI E158-0212

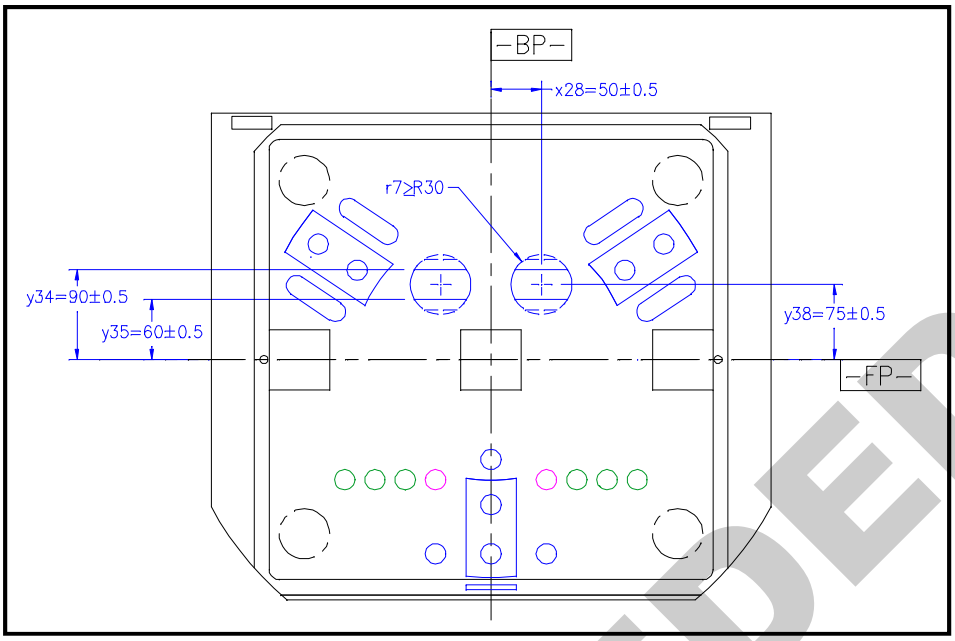

Figure 16
Hold-Down Feature Locations

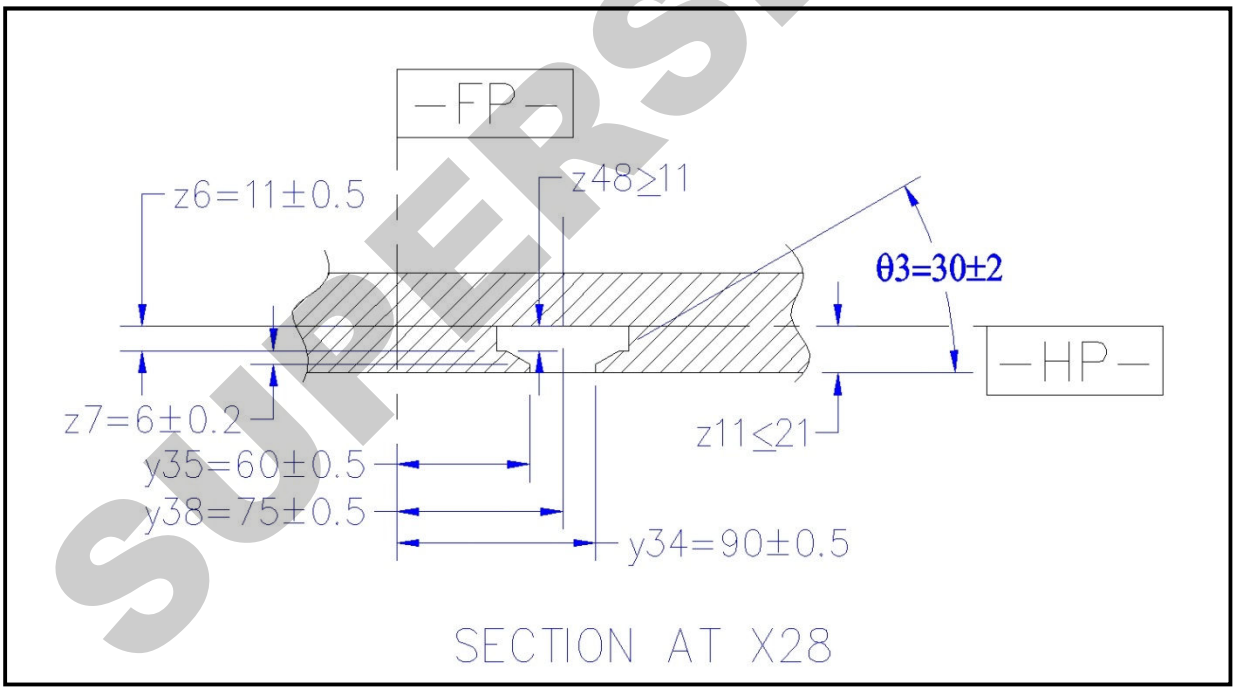

Figure 17
Hold-Down Section at x28=50 mm

SUPERSEDED

Documents Document Sharing Hub
Full document details: SEMI E158-0212

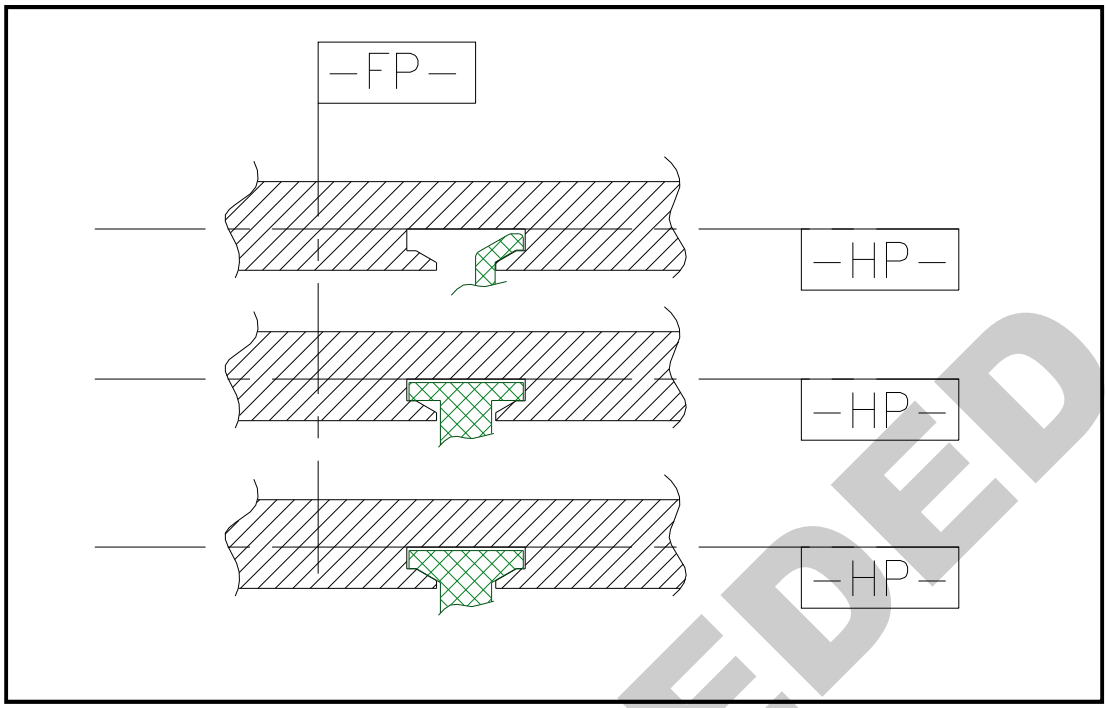

Figure 18
Hold-Down Devices

SUPERSEDED

14 Requirements for Carrier Door

14.1 The carrier door is on the front of the 450 FOUP. The door and its frame must be designed to mate with a load port that conforms to the SEMI Standard for 450 mm load ports. *(x43), (x44), (x45), (d4)* and *(d7)* are provided for reference; the carrier shall be designed to interface with the dimensions and tolerances provided in the SEMI Standard for 450 mm load ports. The FOUP door and its frame must have surfaces that mate with seal areas, the FOUP door sensing area, and reserved areas for vacuum application. See Figures 19, 21 and 23.

14.2 The areas for vacuum application are the four circles bounded by *r28* and located at *x49* and *z31*. The vacuum pad areas, door seal areas, frame seal areas and door sense areas shall be at a distance of *y4* from the FP when the door is closed and latched. No feature on the FOUP may project further from the FP than these areas. The areas reserved for vacuum pads are meant to provide a continuous, smooth surface and shall be opaque for the purpose of presence sensing.

14.3 Dimension *y39* assures that there is clearance between the door and latch keys when the FOUP is pressed against the FIMS port and both latch keys on the port are inserted to their full length. See Figure 22.

14.3.1 When the latch keys are turned more than 45° toward the position that unlocks the FOUP door from the FOUP, the latch key holes on the door shall be such that the door is not removable from the latch keys.

14.4 To allow for unobstructed latch key rotation, the thickness of the outer panel of the carrier door in the area defined by *r23* shall be *y10*. Clearance for latch keys shall be provided by *y39* at (*x44)*. Clearance for door pins shall be provided by *y40* at (*x43 and x45)*. The latch keys and door pins shall be located on the CL. See Figure 22.

14.5 FOUP door features are symmetrical about the CL. Features other than the openings for frame pins and door pins are symmetrical about the BP.

14.6 The opening for the door pin on the left side is circular with diameter (*d4*), and the opening on the right side is a slot. See Figure 23. The purpose of these openings is to assist with FOUP door recovery when the system experiences utility loss.

Documents
Document Sharing Hub
Full document details: SEMI E158-0212

14.7 The opening for the frame pins are open-ended slots on both the left and right sides. The slot features are located at *x39*, *x40* and *x41* from the BP and *z39* from the CL of the door. The corners of the slot features have a radius of *r19* and the depth of the features is *y41*. See Figures 22 and 23.

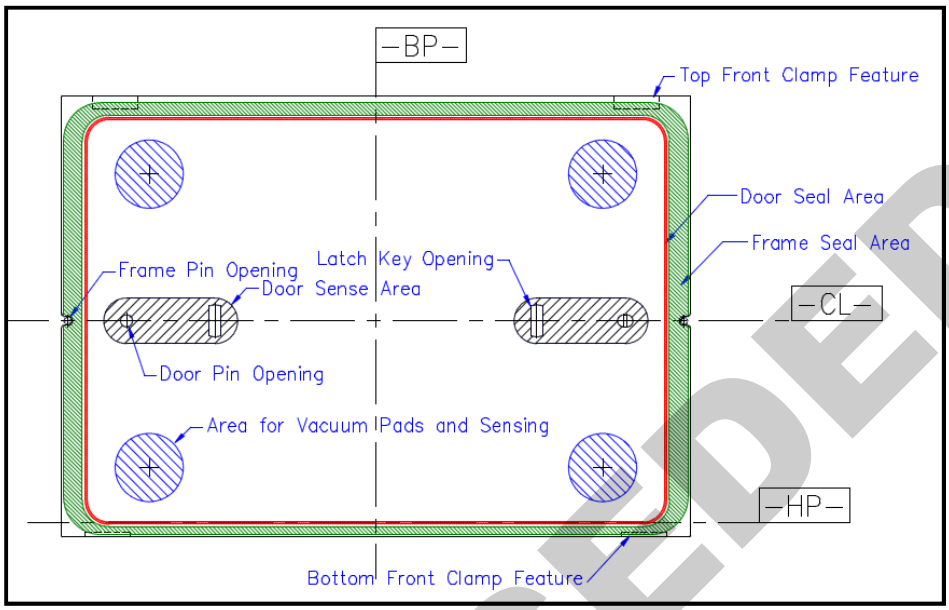

Figure 19
450 FOUP Door Features

14.8 The frame seal area is bounded by *x11* and *x64* on the sides, by *z27* and *z34* on the top, and by *z28* and *z43* on the bottom. There are blend radii *r30* and *r36* at the inner and outer corners respectively.

14.9 The door seal area is bounded by *x47* on the sides, and by *z33* on the top and bottom. The width of the seal area is given by *x48* and *z32*. There are blend radii of *r31* and *r32* at the outer and inner edges respectively. See Figure 21 and Related Information 1, § R1-2.10.

SUPERSEDED

Documents Document Sharing Hub
Full document details: SEMI E158-0212