SEMI E171-0216
SPECIFICATION FOR PREDICTIVE CARRIER LOGISTICS (PCL)

This Standard was technically approved by the Information & Control Global Technical Committee. This edition was approved for publication by the global Audits and Reviews Subcommittee on February 1, 2016. Available at www.semiviews.org and www.semi.org in February 2016; originally published September 2014; previously published December 2015.

1 Purpose

1.1 The purpose of this Standard is to provide a communication scheme for exchanges of carrier logistics related information, especially predictive information, between equipment and the factory system in order to support seamless cascading of carriers for continuous processing of equipment in semiconductor fabrication systems or similar ones.

1.2 The purpose of this Standard is to provide models which represent carrier logistics management status in equipment to exchange predictive carrier logistics information in order to facilitate better synchronization with the factory system.

2 Scope

2.1 This Standard defines a model which represents logistics management of a carrier in equipment as Carrier Logistics Job (CLJ). CLJ includes the following functionalities.

- State management of logistics management of a carrier
- Prediction management including submission, resubmission and withdrawal upon a change of predicted information such as time or load port assignment
- Carrier ID assignment
- Load port assignment

2.2 This Standard defines a model which represents management of multiple CLJs in equipment as Carrier Flow Job (CFJ). CFJ includes the following functionalities.

- Order management of CLJs per process order
- Prediction management of CLJs per carrier logistics order
- Carrier scheduling
- Load port scheduling including a queuing of multiple CLJs on one load port
- Load port arbitration to CLJs for Internal Buffer Equipment

2.3 This Standard covers specifications for services to and events from CLJ and CFJ models.

2.4 This Standard covers PCL specifications for both Fixed Buffer Equipment and Internal Buffer Equipment.

2.5 This Standard covers compatibility with non-slot-integrity operation.

NOTICE: SEMI Standards and Safety Guidelines do not purport to address all safety issues associated with their use. It is the responsibility of the users of the Documents to establish appropriate safety and health practices, and determine the applicability of regulatory or other limitations prior to use.

3 Limitations

3.1 *On the Fly Control Purpose* — This Standard is not for metrics (especially not for postmortem analysis) of waste times that may be contained in several time slots defined in this Standard due to the design of equipment and/or fab system. It only cares about synchronization between equipment and fab system. Those metrics should be standardized separately if needed.

3.2 *Best Effort Basis* — The requirements regarding prediction are on a best effort basis, as a prediction has limited accuracy in nature; moreover, in some cases prediction itself might not be provided.

SUPERSEDED

Documents Document Sharing Hub
Full document details: SEMI E171-0216

3.3 *No Prediction Algorithm Covered* — This Standard does not cover calculation algorithms for predictions.

3.4 *Only for Critical Equipment* — This Standard is intended to be used for equipment for which carrier logistics are critical, and, application of this Standard especially prediction portions may not be needed for equipment to which carrier logistics are not critical.

3.5 *Not for Physical Synchronization of Load Port* — This Standard is not intended to provide physical status of load ports.

4 Referenced Standards and Documents

4.1 *SEMI Standards and Safety Guidelines*

SEMI E15 — Specification for Tool Load Port

SEMI E15.1 — Specification for 300 mm Tool Load Port

SEMI E30 — Generic Model for Communications and Control of Manufacturing Equipment (GEM)

SEMI E39 — Object Services Standard: Concepts, Behavior, and Services (OSS)

SEMI E40 — Standard for Processing Management (PM)

SEMI E62 — Specification for 300 mm Front-Opening Interface Mechanical Standard (FIMS)

SEMI E84 — Specification for Enhanced Carrier Handoff Parallel I/O Interface

SEMI E87 — Specification for Carrier Management (CMS)

SEMI E94 — Specification for Control Job Management (CJM)

4.2 *ISO Standard*[1]

ISO 8601:2004 — Internet Standard for Date/Time Format

NOTICE: Unless otherwise indicated, all documents cited shall be the latest published versions.

5 Terminology

5.1 *Abbreviations and Acronyms*

5.1.1 *AMHS* — automated material handling system

5.1.2 *CEW* — Carrier Exchange Window

5.1.3 *CFJ* — Carrier Flow Job

5.1.4 *CLJ* — Carrier Logistics Job

5.1.5 *FIMS* — front-opening interface mechanical standard

5.1.6 *FOUP* — front opening unified pod

5.1.7 *GEM* — generic equipment model

5.1.8 *PCL* — Predictive Carrier Logistics

5.1.9 *LR* — Load Request

5.1.10 *LS* — Load Stagnation

5.1.11 *UR* — Unload Request

5.1.12 *US* — Unload Stagnation

[1] International Organization for Standardization, ISO Central Secretariat, 1, ch. de la Voie-Creuse, CP 56, CH-1211 Geneva 20, Switzerland; Telephone: +41.22.749.01.11, Fax: +41.22.733.34.30, http://www.iso.org

SUPERSEDED

Documents
Document Sharing Hub
Full document details: SEMI E171-0216

5.2 *Definitions*

5.2.1 *automated material handling system (AMHS)* — an automated system to store and transport materials within the factory.

5.2.2 *buffer* — a set of one or more locations for holding carriers at or inside the production equipment.

5.2.3 *carrier* — a container, such as a FOUP or open cassette, with one or more positions for holding substrates.

5.2.4 *Carrier Exchange Window (CEW)* — a time slot which is allowed for a load port to unload a used carrier and then load a new carrier between AMHS without disturbing the continuous wafer processing of the equipment. Internal Buffer Equipment may have a CEW with multiple load ports to unload multiple used carriers and load multiple new carriers.

5.2.5 *carrier flow* — a stream of carriers which are loaded into the equipment, used by the equipment, and unloaded from the equipment.

5.2.6 *Carrier Flow Job (CFJ)* — a control action to manage multiple CLJs, which constitute one or more carrier flows, so that the equipment can continue processing seamlessly. Equipment may have multiple Carrier Flow Jobs.

5.2.7 *Carrier Logistics Job (CLJ)* — a control action which manages entire logistics operation of one carrier from Load Queued to Unload Request. CLJ requests loading of a carrier, holds the carrier for use, and requests unloading of the carrier.

5.2.8 *CarrierID* — a readable and unique identifier for the carrier.

5.2.9 *collection event* — an event (or grouping of related events) on the equipment that is considered to be significant to the host.

5.2.10 *docked position* — the position where the carrier is ready for substrate extraction or insertion.

5.2.11 *End of Load Request (EoLR)* — a timing when Load Request state ends.

5.2.12 *End of Unload Request (EoUR)* — a timing when Unload Request state ends.

5.2.13 *factory system* — the control system of factory which includes the host and AMHS.

5.2.14 *front-opening interface mechanical standard (FIMS) port* — the substrate access port where the FOUP is opened and closed.

5.2.15 *Fixed Buffer Equipment* — production equipment that has only fixed load ports and no internal buffer for carrier storage. Substrates are loaded and unloaded directly from the carrier at the load port for processing.

5.2.16 *host* — the factory computer system or an intermediate system that represents the factory and the user to the equipment.

5.2.17 *internal buffer* — a set of locations within the equipment to store carriers. These locations exclude load ports.

5.2.18 *Internal Buffer Equipment* — equipment that uses an internal buffer.

5.2.19 *load* — the operation of placing a carrier on a load port.

5.2.20 *load port* — the interface location on the equipment where carriers are loaded and unloaded.

5.2.21 *Load Stagnation* — a stagnation caused by nonreadiness of a carrier to be loaded to the equipment.

5.2.22 *nonproduction wafer (NPW)* — a wafer which is used not for production but for tuning of equipment and its process performance.

5.2.23 *object instantiation* — the act of storing of information related to a physical or logical entity so that it can be recalled on demand based on its public identifier.

5.2.24 *Predictive Carrier Logistics (PCL)* — transportation control of carriers in a factory, which uses predictive information from composing elements to minimize delay due to the system inertia.

5.2.25 *process equipment* — equipment used to produce product, such as semiconductor devices. This excludes metrology and material handling equipment.

SUPERSEDED

Documents Document Sharing Hub
Full document details: SEMI E171-0216

5.2.26 *production equipment* — equipment used to produce product, such as semiconductor devices, including substrate sorting, process, and metrology equipment and excluding material handling equipment.

5.2.27 *properties* — a set of name value pairs assigned to an object or used in a service message to include additional information about the object (e.g., carrier, port, etc.).

5.2.28 *reinitialization* — a process where production equipment is either powered off then powered on or when some kind of hardware or software reset is initiated to cause the equipment to reset and possibly reload its software. On production equipment that contains some kind of mass storage device this can also be called a 'reboot'.

5.2.29 *single communication connection* — exactly one physical connection using exactly one logical session and a standard set of messages.

5.2.30 *slot map* — the information that relates which slots in a carrier hold substrates, both correctly and incorrectly.

5.2.31 *stagnation* — a status of a carrier flow, which shows that the equipment is ready to perform a substrate process, but is forced to stop due to nonreadiness of a carrier which loads or unloads substrates.

5.2.32 *standard message set* — messages conforming to standard message specifications.

5.2.33 *Start of Load Request (SoLR)* — a timing when Load Request state starts.

5.2.34 *Start of Unload Request (SoUR)* — a timing when Unload Request state starts.

5.2.35 *substrate* — material held within a carrier. This can be product, or durables such as reticles.

5.2.36 *undocked* — the status of a carrier on a load port or in an internal buffer that is not at the docked position.

5.2.37 *unload* — the operation of removing a carrier from a load port.

5.2.38 *Unload Stagnation* — a stagnation caused by nonreadiness of a carrier which should be unloaded from the equipment.

6 Conventions

6.1 *Objects*

6.1.1 Whenever the equipment is required to know about specific kinds of entities and required to manage information concerning these entities, it is useful to treat these entities as objects that comply with the basic requirements of SEMI E39 Object Services Standard (OSS). This is especially true whenever there are a large number of objects of a given type or when the entities are transient rather than permanent. In both cases, it is difficult to describe a general way for the host and equipment to specify which particular entity is referenced and to get information related only to a specific one out of many.

6.1.2 By defining these entities as objects that comply with OSS, it is only necessary for the host to specify the type of object and its specific identifier in order to inquire about one or more properties of the specific entity of interest.

6.1.3 *Object Properties*

6.1.3.1 A property (attribute) is information about an individual object that is presented as a name and value pair. The name is a formally reserved text string that represents the property, and the value is the current setting for that property.

6.1.3.2 Properties shall be accessible to the host via the service GetAttr. Using SEMI E39 Object Services Standard, for example, it is possible to:

- get the list of IDs for the current objects at the equipment, and
- get the specified properties for one or more individual objects.

6.1.4 *Rules for Object Properties*

- Attributes with RO (Read Only) access cannot be changed using SetAttr service as defined in OSS.
- Attributes with RW (Read/Write) access can be changed using SetAttr service as defined in OSS.
- Additional attributes may be specified by the user or the equipment supplier by using an attribute name starting with 'UD' (User Defined). Care should be taken to ensure the name of the attribute is unique.

SUPERSEDED

Documents
Document Sharing Hub
Full document details: SEMI E171-0216

6.1.5 *Object Attribute Table*

6.1.5.1 The object attribute table is used to list all the attributes related to the defined object as shown below. The access is defined as Read Only (RO) or Read/Write (RW). The Reqd column is used to specify whether the attribute is required (Y), conditional (C), or optional (O) for implementation. Finally, the Form column is used to specify the format of that particular attribute.

Table 1 Object Attribute Table

Attribute Name	*Definition*	*Access*	*Reqd*	*Form*

6.2 *State Model Methodology*

6.2.1 A state model consists of four elements: a State Model Diagram, a State Model Definition Table, a State Definition, and a State Transition Table.

6.2.2 *State Model Diagram* — The diagram of the state model uses the Harel State Chart notation. An overview of this notation is presented in an Appendix of SEMI E30. The definition of this notation is presented in Science of Computer Programming 8, "Statecharts: A Visual Formalism for Complex Systems," by D. Harel, 1987.[2]

6.2.3 *State Model Definition Table* — The State Model Definition Table used in this Standard has the following format. This table defines states and possible transition(s) from each state side by side. Each state has one or more transitions. When the transition comes from outside this table, the state definition column associated with the transition may be blank (see #1). When the transition comes from unspecified multiple states with the same condition, the state definition column may say '#Any state,' and there may not be an explicit transition number.

6.2.3.1 *Definition of State* — Columns under the State column define States with No. (Number), Name and Abstract of Definition. 'No.' corresponds to the state number in the associated state diagram. 'Name' defines a name of each state. 'Abstract of Definition' provides an abstract of the State Definition in the State Definition Table.

6.2.3.2 *Definition of Transition* — Columns under the Transition column define Transitions with No. (Number), Abstract of Trigger, Abstract of Action, New State, and Comments. 'No.' corresponds to transition number in the associated state diagram. 'Abstract of Trigger' and 'Abstract of Action' provide abstracts of the Trigger and Action in the State Transition Table accordingly. 'New State' defines a state number to move to after the transition is completed by pointing to one of the states defined in the state definition in left side of the table. The Comment column may be used to put comments to each transition or their From state.

Table 2 State Model Definition Table

State			*Transition*				
No.	*Name*	*Abstract of Definition*	*No.*	*Abstract of Trigger*	*Abstract of Action*	*New State*	*Comments*
-#1	-#1	-#1	T00			S00	
Snn#2	# Any state#2	-#2	-			S03	
S00			T01			S01	
S04#3			T02			S00	
S01			T03			S02	
			T04			S03	
S02			T05#4			S00	

[2] Elsevier Science, P. O. Box 945, New York, NY 10159-0945, USA; http://www.journals.elsevier.com/science-of-computer-programming/

SUPERSEDED
Documents Document Sharing Hub
Full document details: SEMI E171-0216

State			Transition				
No.	*Name*	*Abstract of Definition*	*No.*	*Abstract of Trigger*	*Abstract of Action*	*New State*	*Comments*
S10[#5]			-	-	-	-	
S11			T10			S12	
S12			T11			S11	
S03			T06			S00	

#1 When the transition comes from outside of this table, the state definition column may be blank.

#2 When the transition comes from unspecified multiple states with the same condition, the state definition column may say '#Any state'.

#3 A state which has substates.

#4 One transition path has multiple cases (trigger and action pairs).

#5 A state separated by a dotted line is a parallel state of the state above.

6.2.4 *State Definition Table* — State definition tables are provided in conjunction with the state diagrams to explicitly describe the definition of each state. A state definition table contains columns for State Number, Mnemonic, State Definition, and Comments.

Table 3 State Definition Table

No.	*Mnemonic*	*State Definition*	*Comments*

6.2.5 *State Transition Table* — State Transition Tables are provided in conjunction with the state diagrams to explicitly describe the nature of each state transition. A State Transition Table contains columns for Transition Number, Previous State, Trigger, New State, Actions, and Comments. The 'trigger' (column 3) for the transition occurs while in the Previous State. The 'Actions' (column 5) includes a combination of:

- Actions taken upon exit of the previous state,
- Actions taken upon entry of the new state, and
- Actions taken which are most closely associated with the transition.

Table 4 State Transition Table

No.	*Previous State*	*Trigger*	*New State*	*Actions*	*Comments*

6.2.6 *State Model Requirements*

6.2.6.1 *Requirement* — The state models included in this Standard are a requirement for compliance. Equipment shall maintain state models for each of the required state models as defined in this Standard. Equipment shall maintain individual and unique state models for each logical entity instantiated or each physical entity in the equipment that has associated state models.

6.2.6.2 *Representation as the Host View* — A state model represents the host's view of the equipment, and does not necessarily describe the internal equipment operation. All state model transitions shall be mapped sequentially into the appropriate internal equipment collection events that satisfy the requirements of those transitions. In certain implementations, the equipment may enter a state and have already satisfied all of the conditions required by the state models in this Standard for transition to another state. In this case, the equipment makes the required transition without any additional actions.

SUPERSEDED

Documents
Document Sharing Hub
Full document details: SEMI E171-0216

6.2.6.3 *Additional Substates* — Some equipment may need to include additional substates other than those in this Standard. Additional substates may be added, but shall not change the defined state transitions in this Standard. All expected transitions between states in this Standard shall occur.

6.2.6.4 *Uniqueness of Event Identifier* — The event identifier reported during a particular state transition change for each of these state models shall be shared for all associated state models but unique for each transition. For example, if the equipment has two load ports and the load port state model defines ten transitions, there must be exactly ten event identifiers for each load port transfer state model but not ten for each physical load port. The information identifying the physical entity or logical entity undergoing the transition will be contained within the associated event report.

6.2.6.5 *Events* — All state transitions in this Standard, unless otherwise specified, shall correspond to collection events. More explicitly, there must be a unique collection event for each state transition.

6.2.6.6 *Events for Multiple AND Substates* — When a state model is defined with multiple AND substates, the equipment may report all state entry events with only one collection event.

6.2.6.7 *Events for Conditional Path* — When conditional paths are defined in the state model, it is not necessary to report any state transition(s) until a terminal state is reached at which time each transition used to reach that state is reported.

6.3 *Object*

6.3.1 *Recognition of Object* — From the host point of view, an object is instantiated if the host is able to query the equipment about that object, its current state, and other attributes. Once instantiated, the object is considered destroyed (no longer instantiated) if the response to such queries is 'unknown object'.

6.3.2 *Object Identifier (ObjID)* — The purpose of an Object Identifier is to allow references to an object within the system. The Object Identifier is assigned when an object is instantiated and should be unchanged or persistent until the end of the object lifecycle. The Object Identifier shall be unique at the equipment during lifecycle of the object.

6.4 *Services*

6.4.1 *Definition of Service* — Services are functions or methods that may be provided by either the equipment or the host. A service message may be either a request message, which always requires a response, or a notification message that does not require a response.

6.4.1.1 *Notification Message Service* — Notification type messages are initiated by the service provider (e.g., the equipment) and the provider does not expect to get a response from the service user.

6.4.1.2 *Request Message Service* — Request messages are initiated by a service user (e.g., the host). Request messages ask for data or an activity from the provider. Request messages expect a specific response message (no presumption on the message content).

6.4.2 *Service Message Description* — A service message description table defines the parameters used in a service, as shown in the following table:

Table 5 Service Message Description Table

Service Name	*Type*[#1]	*Description*

#1 Type can be either 'N' = Notification or 'R' = Request & Response.

6.4.3 *Service Message Parameter Definition* — A service parameter dictionary table defines the description, range, and type for parameters used by services, as shown in the following table:

SUPERSEDED

Documents Document Sharing Hub
Full document details: SEMI E171-0216

Table 6 Service Message Parameter Definition Table

Parameter Name	*Form*	*Description*
#1		

#1 A row is provided in the table for each parameter used on a service.

6.4.4 *Service Message Definition* — A service message description table defines the parameters used in a service message, and describes each message and its cause/effect to the equipment, as shown in the following table:

Table 7 Service Message Definition Table

Service Parameter	*Req/Ind*	*Rsp/Conf*	*Description*

6.4.4.1 *Definition of Req/Ind and Rsp/Conf Columns* — The columns labeled Req/Ind and Rsp/Conf link the parameters to the direction of the message. The message sent by the initiator is called the 'Request'. The receiver terms this message the 'Indication'. The receiver may then send a 'Response', which the original sender terms the 'Confirmation'.

6.4.4.2 *Definition of Codes for Req/Ind and Rsp/Conf Columns* — The following codes appear in the Req/Ind and Rsp/Conf columns and are used in the definition of the parameters (i.e., how each parameter is used in each direction):

Table 8 Codes For Req/Ind and Rsp/Conf Columns

M	Mandatory Parameter – must be given a valid value
C	Conditional Parameter – may be defined in some circumstances and undefined in others. Whether a value is given may be completely optional or may depend on the values of other parameters.
U	User-Defined Parameter
-	The parameter is not used
=	(for response only) Indicates that the value of this parameter in the response must match that in the primary (if defined)

6.5 *Variable Data Definitions*

6.5.1 Variable data definitions define variable data requirements. Values of these variables are available to the host via collection event reports and host status queries.

6.5.2 *Event Report Requirement* — The identifier of an object and all of the attributes of that object shall be available for inclusion in event reports associated with that object.

6.5.3 *Object Attribute Variable in Non-Extinction Event* — The object attribute variables in event reports linked to non-extinction event(s) shall contain the values of the attributes after the transition. This requirement allows the receiver of the report to know the current condition of the object.

6.5.4 *Object Attribute Variable in Extinction Event* — The object attribute variables in event reports linked to extinction event(s) shall contain the values of the attributes before the transition unless it is specifically stated that the destruction transition modifies the attribute value. This requirement allows the receiver of the report to know the final condition of the object at the time it was deleted.

6.5.5 Subscripted variables are used either as items within a list or to differentiate data representing different entities. Subscripted variables are always valid.

6.5.6 *Table Format* — The following table defines variable data that shall be provided by the production equipment.

SUPERSEDED

Documents
Document Sharing Hub
Full document details: SEMI E171-0216

Table 9 Variable Data Definitions

Variable Name	*Description*	*Type*	*Access*	*Comment*

7 PCL Conceptual Descriptions

7.1 *Conceptual Descriptions* — This chapter defines and describes a concept of PCL. This chapter does not contain any requirements.

7.2 *Load/Unload Readiness on Load Port and Relationship with SEMI E87* — In order to avoid conflicts and to be coexistent with SEMI E87 CMS, this Standard only provides a scheduling information of carrier logistics, and does not represent physical readiness for Load/Unload which is covered by SEMI E87.

7.3 *Key Timings for Carrier Logistics* — There are four key timings for carrier logistics between equipment and the factory system. PCL focuses on providing these timings and their predictions as shown below. (See definition of PCL for state names.)

7.3.1 *Basic Timings* — There are two key timings and their predictions for carrier logistics between equipment and the factory system.

- SoUR (Start of Unload Request): Timing when a carrier completes and its unload is requested
- EoLR (End of Load Request): Timing when a carrier is loaded
- UR (Unload Request) Prediction: Predicted timing when a carrier completes and its unload is requested
- LS (Load Stagnation) Prediction: Predicted timing by which a carrier has to be loaded to avoid stagnation

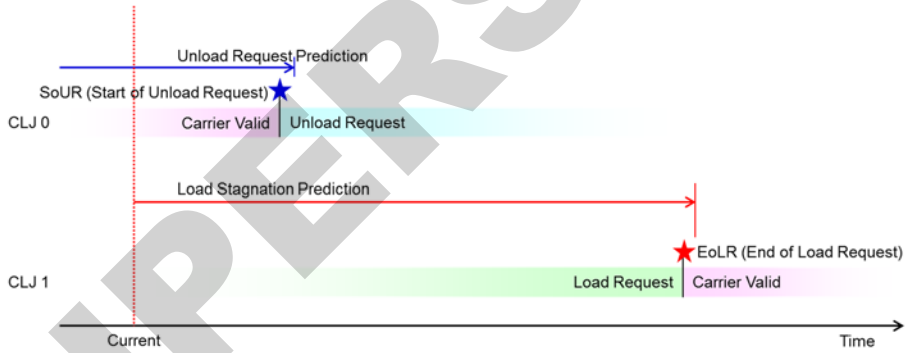

Figure 1
Key Timings for PCL

7.3.2 *Additional Timings* — There are two additional key timings and their predictions, mainly for Internal Buffer Equipment.

- SoLR (Start of Load Request): Timing when a carrier load is requested.
- EoUR (End of Unload Request): Timing when a carrier is unloaded.
- LR (Load Request) Prediction: Predicted timing at which Load Request state starts. This prediction is introduced to indicate the predicted timing at which the equipment requests loading of a carrier for the CLJ. Note that the physical readiness of load port to load the carrier should be confirmed via SEMI E87.

SUPERSEDED

Documents Document Sharing Hub
Full document details: SEMI E171-0216

- US (Unload Stagnation) Prediction: Predicted timing by which the carrier has to be unloaded to avoid stagnation. US Prediction is used when there is no subsequent Load Request or Unload Request which implies Unload Stagnation Prediction timing to the host (or AMHS). For example, Load Stagnation Prediction of subsequent Load Request on the same load port implies that the Unload Request and the subsequent Load Request should be completed by the predicted time given by the Load Stagnation Prediction, so, US Prediction is not required.

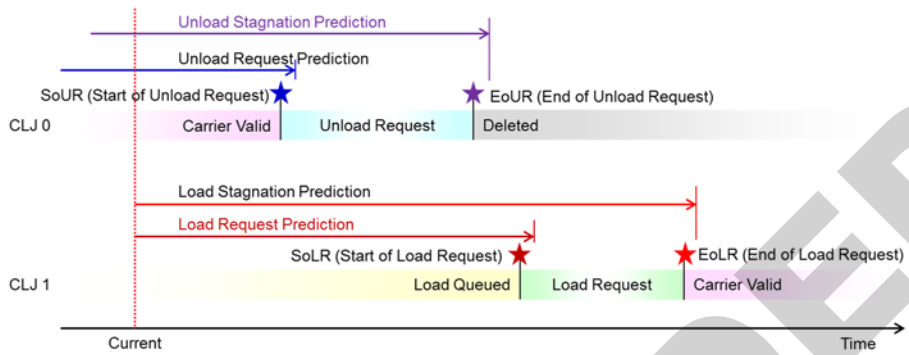

Figure 2
Additional Key Timings for PCL

7.4 *Introduction of Carrier Logistics Job (CLJ)* — In order to model the logistics control of a carrier, including the key timings and their predictions, this Standard introduces CLJ, which represents each carrier's logistics control. CLJ models the management process of a carrier from the request for a new carrier to sending the carrier as shown below.

- Load Queued: This state is introduced mainly for Internal Buffer Equipment to represent the situation in which Load Request Prediction or Load Stagnation Prediction is done, however the equipment is not capable to accept a carrier for the prediction yet (typically because no space is available in Internal Buffer yet). In case CLJs are assigned to load ports in order by their predicted times and there is no possibility of dead lock, Load Request state may be used instead of Load Queued state for simplicity. See Application note for Internal Buffer Equipment in Appendix for an example.
- Load Request: This state is introduced to represent the situation in which the equipment is requesting load of a carrier. Load Stagnation Prediction, Unload Request Prediction, or Unload Stagnation Prediction may also be done. This state does not always mean physically ready to load.
- Carrier Valid: A carrier is loaded and not completed yet by the equipment. Unload Request Prediction or Unload Stagnation Prediction may also be done.
- Unload Request: The equipment is requesting unload of the carrier. Unload Stagnation Prediction may also be done. This state does not always mean physically ready to unload. In Internal Buffer Equipment, the carrier may still be in Internal Buffer.

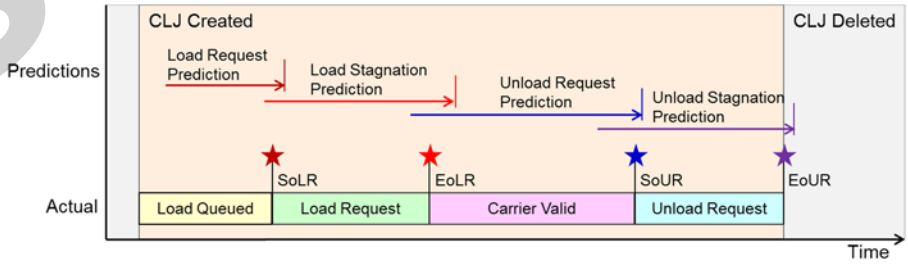

Figure 3
States and Predictions of CLJ Object

SUPERSEDED

Documents
Document Sharing Hub
Full document details: SEMI E171-0216

7.5 *Introduction of Carrier Exchange Window (CEW)* — Because the resources of equipment are limited, the number of carriers which can reside in the equipment is also limited. So, in normal cases, loading of new carriers follows after unloading of used carriers. These timings form a window in which AMHS should exchange those carriers.

7.5.1 *Definition of CEW* — See Terminology section.

7.5.2 *CEW for Fixed Buffer Equipment* — In Fixed Buffer Equipment, loading of a new carrier follows after unloading of a used carrier on each load port. Normally, during CEW, other load ports hold required carriers for cascading of wafers. A carrier has overhead times such as confirmation of carrier ID, opening of the door, confirmation of wafer existence on slots, and creation of process job before the wafers become ready for process, overhead times such as closing of the door, purging with inert gas, and undock after the process completion, and equipment has a wafer queue. Due to those overhead times, Carrier Valid requires Handover Periods. The Handover Period is determined by equipment according to its configuration and operation.

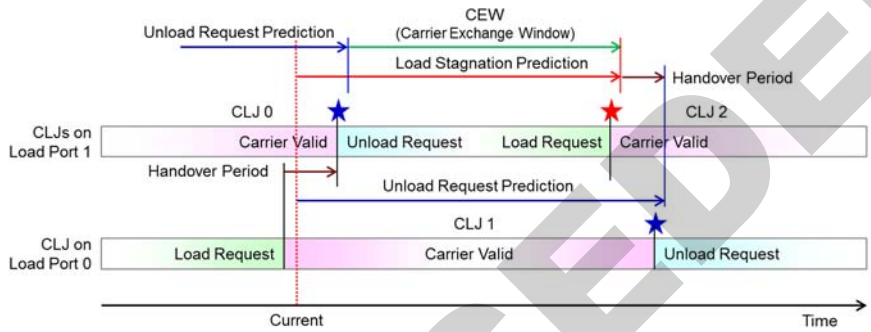

Figure 4
Definition of CEW in Two Load Port Fixed Buffer Equipment

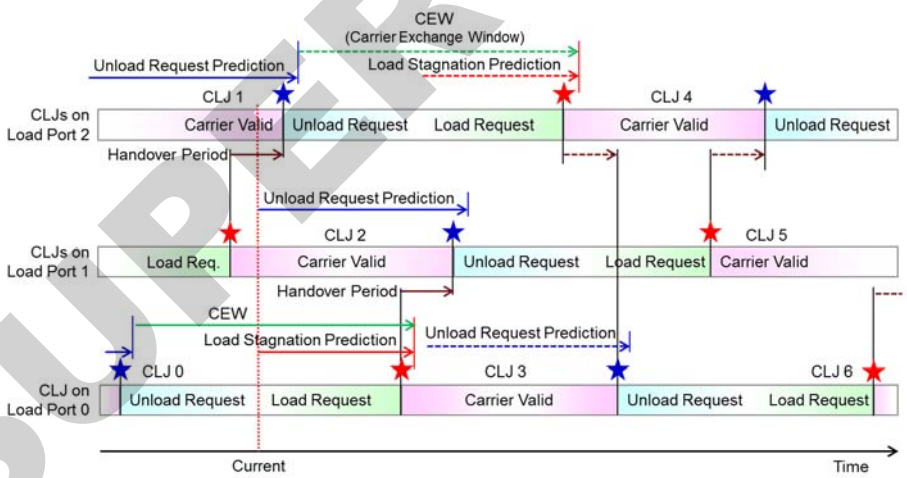

Figure 5
Definition of CEW in Three Load Port Fixed Buffer Equipment

7.5.3 *CEW for Internal Buffer Equipment* — In Internal Buffer Equipment, loading of new carriers may follow after unloading of used carriers on multiple load ports. Normally, during CEW, internal buffers hold required carriers for cascading of wafers.

7.5.3.1 *CLJs and CEW* — CLJs which form a batch may typically be dealt as a group. Predictions may be done at the same time; however the predicted times for those CLJs may be different according to the structure of the equipment. In the example shown in the following figure, currently, Unload Request Predictions of CLJs which form Batch 0

SUPERSEDED

Documents
Document Sharing Hub
Full document details: SEMI E171-0216

(CLJ 0 through CLJ 3) are already done. At the timing of Batch 1 formation, Unload Request Predictions of CLJ 4 through CLJ 7 are done, and just after them, to make Batch 2 formed by then, Load Stagnation Predictions of CLJs for Batch 2 (CLJ 8 through CLJ 11) may be calculated. Thus, the Unload Request Predictions for Batch 0 and Load Stagnation Predictions for Batch 2 form CEW. The timing, when Unload Request state ends and Load Queued state changes to Load Request state, depends on the timing when AMHS completes the unload.

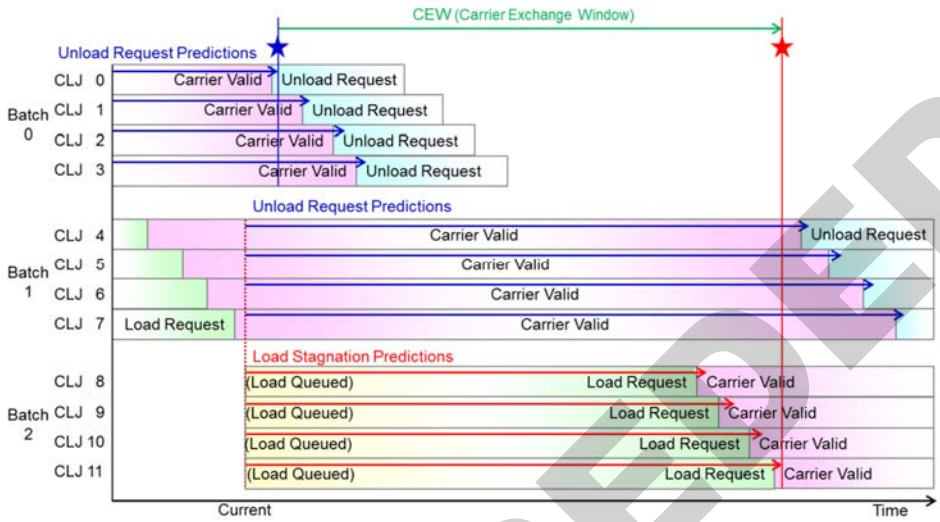

Figure 6
CLJs and CEW in Typical Internal Buffer Equipment

7.5.3.2 *Load Port View of CLJs and CEW* — CLJs may be assigned to load ports as shown in the following figures. In the case of Bi-Direction, two load ports are used to unload four carriers, then, to load four carriers. In the case of Uni-Direction, one load port is used to unload four carriers, and another load port is used to load four carriers. This Standard supports scheduling aspect and actual (physical) readiness of carrier load/unload on load port should be controlled by using SEMI E87 and SEMI E84.

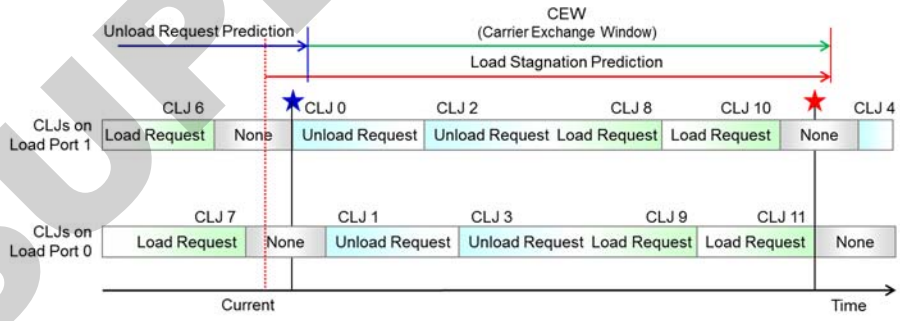

Figure 7
Load Port View of CLJs and CEW in Internal Buffer Equipment (Bi-Direction)

SUPERSEDED

Documents
Document Sharing Hub
Full document details: SEMI E171-0216

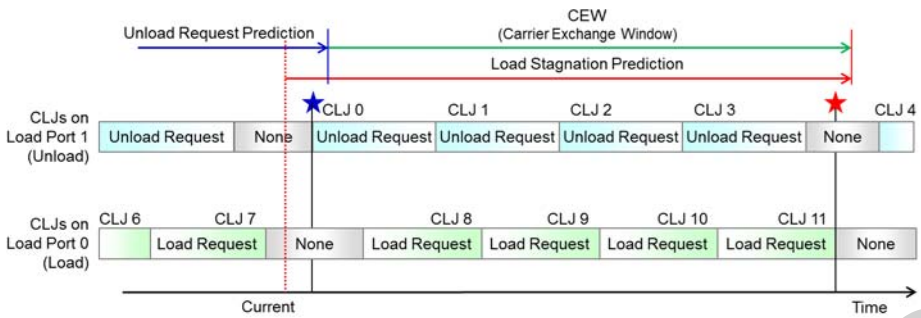

Figure 8
Load Port View of CLJs and CEW in Internal Buffer Equipment (Uni-Direction)

7.6 *Introduction of Carrier Flow Job (CFJ)* — In order to define the relationship between CLJs, this Standard introduces CFJ, which manages a carrier flow. CFJ manages the order of CLJs and predicted timings, etc.

Carrier Flow Job | Carrier Logistics Job

Order	ObjID (Op.)	CLJState	CarrierFlowID (Optional)	CLJCarrierID (Optional)	CLJLPID (Optional)	SoLRPTime (Optional)	EoLRPTime (Optional)	SoURPTime	EoURPTime (Optional)
0	0001	Unload Request	1	C0	1	-	-	-	hh.mm.ss1
1	0002	Carrier Valid	1	C1	2	-	-	hh.mm.ss2	
2	0003	Carrier Valid	2	C2	3	-	-	hh.mm.ss3	
3	0004	Load Request	2	-	4	-	hh.mm.ss4	-	
4	0005	Load Request	1	-	1	-	hh.mm.ss5	-	
5	0007	Load Queued	2	-	3	hh.mm.ss6	-	-	
6	0006	Load Queued	1	-	2	hh.mm.ss7	-	-	
7	-	-	-	-	-	-	-	-	

Figure 9
Image of Data Provided by CFJ

7.7 *Scalable Specifications* — In order to enable gradual application to the existing designs, this Standard provides building blocked scalable specifications. Examples are shown in the following table. See Appendices for explanations.

Table 10 Scalability

Name	*Type*#1		*Main States*#2				*Predictions*				*Assignment*#3		*Notes*
	FB	*IB*	*LQ*	*LR*	*CV*	*UR*	*LR*	*LS*	*UR*	*US*	*LP*	*CID*	
Interim	A	-	-	-	R	R	-	-	R	-	-	-	UR Prediction only
LP-Based	A	-	-	R	R	-	-	R	R	-	-	-	Load port by load port
Basic	A	-	-	R	R	-	-	R	R	-	R	O	Basic for Fixed Buffer
Bi-Direction	-	A	-	R	R	R	-	R	R	-	R	R	Bi-Direction Internal Buffer
Uni-Direction	-	A	R	R	R	R	R	R	R	R	R	R	Uni-Direction Internal Buffer

#1 FB = Fixed Buffer Equipment, IB = Internal Buffer Equipment.

#2 LQ = Load Queued, LR = Load Request, CV = Carrier Valid, UR = Unload Request.

#3 LP = Load Port, CID = Carrier ID.

#4 A = Applicable, R = Required, O = Optional, - = Not required.

7.8 *Relationship of the Entities in PCL* — The CLJ and CFJ objects have relationships shown in the following figure.

SUPERSEDED

Documents Document Sharing Hub
Full document details: SEMI E171-0216

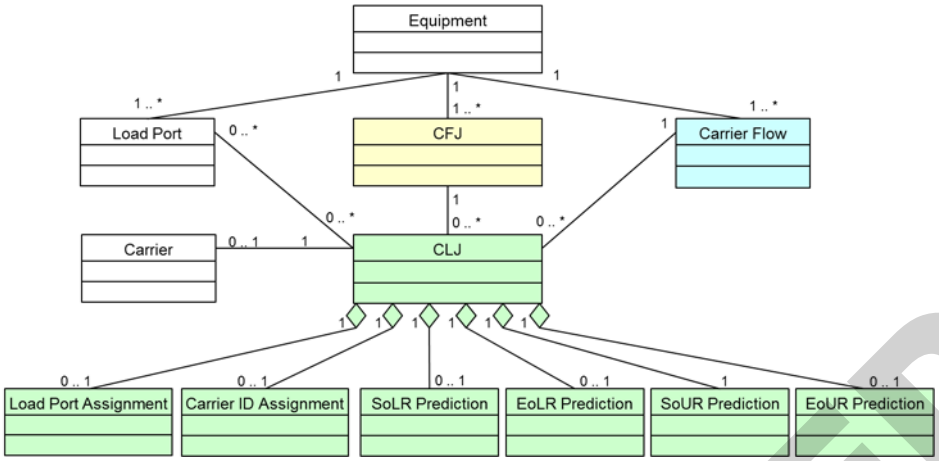

Figure 10
Relationship Model of CFJ and CLJ Objects

8 PCL Requirements

8.1 *PCL Requirements* — The PCL Standard defines the behavior, data, and services required for the following objects of equipment. This Standard provides a standard interface for host/equipment communications regarding the following information.

8.1.1 *Carrier Flow Job (CFJ) Object* — CFJ is defined in the section 'Carrier Flow Job (CFJ) Object Requirements.'

8.1.2 *Carrier Logistics Job (CLJ) Object* — CLJ is defined in the section 'Carrier Logistics Job (CLJ) Object Requirements.'

8.2 *Reporting Scheme of Time for PCL* — Every PCL service reports the timing as a combination of current time of the equipment clock and predicted time per the equipment clock in order to be free from a time difference problem between the host and equipment. The host is strongly recommended to compare the host clock and equipment clock, and to understand the reported time per equipment clock in host time per host clock.

8.3 *Prediction Resubmission Threshold for PCL* — PCL allows resubmission of predictions to report updated value. However, in order to avoid too many resubmissions, resubmission can only be made when the new value satisfies PTimeSensitivity and PTimeSenseDB definitions.

8.4 *PCL Variable Data Definitions* — This section defines variable data requirements for PCL. Values of these variables are available to the host via collection event reports and host status queries.

SUPERSEDED

Documents
Document Sharing Hub
Full document details: SEMI E171-0216

Table 11 PCL Variable Data Definitions

Variable Name	*Description*	*Type*	*Access*	*Comment*
PCLActive	Activate PCL functionality. PCLActive = PCL functionality is Active PCLInactive = PCL functionality is Inactive Default is PCLInactive.	Enumerated: PCLActive, PCLInactive	RW	This determines whether CFJ and CLJ are active or inactive.
PTimeSensitivity	Sensitivity to decide resending of predicted times defined in this Standard. The purpose of this variable is to prevent too frequent resends. Predicted times shall not be resent if the change of remaining time is smaller than this percentage.	Positive integer [%]	RW	While the duration from current time to the predicted time is long, small changes are not important. The predicted time is expected to become precise when the duration becomes shorter.
PTimeSenseDB	Dead-band of sensitivity to resend predicted time. The purpose of this variable is to prevent too frequent resends. Predicted times shall not be resent if the change of remaining time is smaller than this value.	Positive integer [sec]	RW	It is meaningless to resend small changes to which the factory system, including the host and AMHS, cannot respond.

8.5 *TimeReport* — This section defines the format, which is used to report a time in this Standard, by using ISO 8601:2004. TimeReport information shall be reported as specified in this section.

YYYY-MM-DDThh:mm:ss.sTZD (e.g., 2014-04-11T15:30:20.34+08:00)

Table 12 Definition of TimeReport

Identifier	*Description*
YYYY	Four-digit year
MM	Two-digit month (01 = January through 12 = December)
DD	Two-digit day of month (01 through 31)
T	Special separator character (‘T’) used between date and time
hh	Two digits of hour (00 through 23) (am/pm NOT allowed)
mm	Two digits of minute (00 through 59)
ss	Two digits of second (00 through 59)
s	One or more digits representing a fraction of a second
TZD	time zone designator (Z, +hh:mm, or –hh:mm)

9 Carrier Flow Job (CFJ) Object Requirements

9.1 *CFJ Object Definition*

9.1.1 *Definition of CFJ Object* — The CFJ object is a software representation of the carrier flow management in the equipment. CFJ manages multiple CLJs which constitute one or more carrier flows. Information about CFJ is encapsulated as an object. This allows the host to exchange information with the equipment about one or more specific CFJs by using services defined in SEMI E39 Object Services Standard.

9.1.2 *Number of CFJs* — Equipment may create multiple CFJs when the equipment manages multiple carrier flows separately per load port. CFJ can be assigned to each load port, to a group of load ports, or to whole equipment depending on the operation of the equipment. (See Appendices for examples.)

SUPERSEDED

Documents Document Sharing Hub
Full document details: SEMI E171-0216