SEMI E181-0424
SPECIFICATION FOR PANEL FOUP FOR PANEL LEVEL PACKAGING

This Standard was technically approved by the Physical Interfaces & Carriers Global Technical Committee. This edition was approved for publication by the global Audits and Reviews Subcommittee on February 2, 2024. Available at www.semiviews.org and www.semi.org in April 2024; originally published March 2021; previously published April 2023.

NOTICE: The section symbol (§) is used to reference a numbered section, paragraph, or header and all subordinate paragraphs, headers, and embedded material (i.e., EXCEPTIONs, lists) therein. The paragraph symbol (¶) is used to reference a particular numbered paragraph and embedded material therein. When duplicated (i.e., §§ and ¶¶) the symbols are used to reference more than one section or paragraph, respectively.

NOTICE: Paragraphs entitled 'NOTE:' are not an official part of this Standard or Safety Guideline and are not intended to modify or supersede the official Standard or Safety Guideline. These have been supplied by the global technical committee to enhance the usage of the Standard or Safety Guideline.

1 Purpose

1.1 The purpose of this Specification is to establish basic physical dimensions for the Panel FOUP intended to be used to transport and store panels, as specified by SEMI 3D20 for 510 mm × 515 mm panel size and 600 mm × 600 mm panel size.

1.2 This Specification is intended to define the reference planes for the dimensions of the Panel FOUP and the panel load port.

1.3 This Specification is intended to define a set of requirements to ensure interoperability of load ports and Panel FOUP without limiting innovative solutions.

2 Scope

2.1 This Standard specifies the external features and dimensions of the Panel FOUP, however, individual dimensions related to panel size and number of stored panels are specified by the Subordinate Standards.

2.2 This Standard specifies the interior exclusion volumes for supporting and restraining panels in the Panel FOUP, however, individual dimensions related to panel size and number of stored panels are specified by the Subordinate Standards.

2.3 This Standard defines three orthogonal reference planes as references for Panel FOUP dimensions.

NOTICE: SEMI Standards and Safety Guidelines do not purport to address all safety issues associated with their use. It is the responsibility of the users of the Documents to establish appropriate safety and health practices, and determine the applicability of regulatory or other limitations prior to use.

3 Limitations

3.1 The detailed methods and mechanisms inside a Panel FOUP door as to how a door may be engaged to and disengaged from the Panel FOUP shell are not specified by this Standard.

4 Referenced Standards and Documents

4.1 *SEMI Standards and Safety Guidelines*

SEMI 3D20 — Specification for Panel Characteristics for Panel Level Packaging (PLP) Applications

SEMI E144 — Specification for RF Air Interface Between RFID Tags in Panel FOUP and RFID Reader in Semiconductor Production and Material Handling Equipment

SEMI E182 — Specification for Panel FOUP Loadport for Panel Level Packaging

NOTE 1: The SEMI Physical Interfaces & Carriers Global Technical Committee is developing a Specification for Panel FOUP Load Ports intended to be used in conjunction with this Standard.

NOTICE: Unless otherwise indicated, all documents cited shall be the latest published versions.

Documents Document Sharing Hub

Full document details: SEMI E181-0424

5 Terminology

5.1 *Abbreviations and Acronyms*

5.1.1 *BP* — bilateral plane

5.1.2 *CL* — centerline

5.1.3 *EE* — end effector

5.1.4 *FOUP* — front-opening unified pod

5.1.5 *FP* — facial plane

5.1.6 *HP* — horizontal plane

5.1.7 *KC* — kinematic coupling

5.1.8 *KCP* — kinematic coupling pin

5.1.9 *OHT* — overhead hoist transport

5.1.10 *PLP* — panel level packaging

5.1.11 *RFID* — radio frequency identification

5.1.12 *TIR* — total indicator runout

5.2 *Definitions*

5.2.1 *bilateral plane (BP)* — a vertical plane, defining $x=0$ of a system with three orthogonal planes (HP, BP, FP), coincident with the nominal location of the rear primary KCP, and midway between the nominal locations of the front primary KCPs. [SEMI E158]

5.2.2 *centerline (CL)* — a horizontal line centered vertically on the Panel FOUP door used as the reference for z dimensions of door features. [SEMI E158]

5.2.3 *facial plane (FP)* — a vertical plane, defining $y=0$ of a system with three orthogonal planes (HP, BP, FP), $y33=194 \pm 0$ mm in front of the nominal location of the rear primary KCP. [SEMI E158]

5.2.4 *front (of Panel FOUP)* — the part of the Panel FOUP closest to the door. [SEMI E158]

5.2.5 *horizontal plane (HP)* — a horizontal plane, defining $z=0$ of a system with three orthogonal planes (HP, BP, FP), coincident with the nominal location of the uppermost points (tips) of the three KCPs. [SEMI E158]

5.2.6 *nominal location* — the value a dimension would have if its tolerance were reduced to zero. [SEMI E158]

5.2.7 *nominal panel seating plane* — a horizontal plane that bisects the panel pickup volume.

5.2.8 *origin* — the intersection of the BP and FP. [SEMI E158]

5.2.9 *panel* — the rectangular base material to implement panel level packaging processes. [SEMI 3D20]

5.2.10 *panel deflection* — change in Panel shape (TIR) due to gravity while the panel is resting on the Panel FOUP Panel supports with the Panel FOUP door open.

5.2.11 *Panel FOUP* — type of FOUP used for storage of panels and/or for transportation.

5.2.12 *panel seating plane* — the bottom surface of an ideally rigid flat panel as it rests on the panel supports.

5.2.13 *panel substrate* — the rectangular starting material (often epoxy or glass) that can be used to implement panel level packaging processes.

5.2.14 *plane* — a theoretical surface which has infinite width and length, zero thickness and zero curvature.

5.2.15 *process carrier* — a device or material, usually Si, ceramic, glass, or metal, that provides temporary mechanical support to hold one or more panels during processing. [SEMI 3D20]

5.2.16 *rear (of Panel FOUP)* — the part of the Panel FOUP farthest from its door.

Documents
Document Sharing Hub
Full document details: SEMI E181-0424

6 Ordering Information

6.1 Panel FOUP is classified by the panel size and the number of stored panels used.

6.1.1 Dimension specified in this Standard shall be used for the common dimensions.

6.1.2 Individual dimensions related to panel size and number of stored panels shall be referred to the Subordinate Standard specific to the panel size and stored panel numbers.

NOTE 2: The SEMI Physical Interfaces & Carriers Global Technical Committee is developing the Subordinate Standards for Panel FOUP intended to be used in conjunction with this Standard.

7 Reference Planes (HP, FP, BP) Specification

7.1 The HP, FP, and BP as described in the definition section are ideal planes, which are intended to be used to depict the position of certain features relatively to these planes. These planes are at position zero (x, y, z) with no tolerance associated since these ideal planes do not represent a physical feature.

NOTE 3: The top surfaces of the KCPs are not the surfaces on which the Panel FOUP rests. Appendix 1 shows how test fixtures can be made to rest on the KCPs to duplicate the position of a Panel FOUP.

7.2 FP and BP are defined as vertical planes and ideally are parallel to the gradient of the gravity field. All three planes are mutually perpendicular. Only positive numbers are used to define coordinates within this system of three planes. No negative numbers are used in order to be as close as possible to standard mechanical drawing practices. Necessary clarification on the position of a feature usually will be achieved via figures.

NOTE 4: For best understanding, the definitions of the reference planes should be read in the order HP, BP, FP.

7.3 *Reference Baselines* — One centerline (CL) is defined:

- CL for the Panel FOUP door. It passes through the centers of the openings for the door pins. All the z-dimensions of door features are symmetric to the CL.

Documents Document Sharing Hub

Full document details: SEMI E181-0424

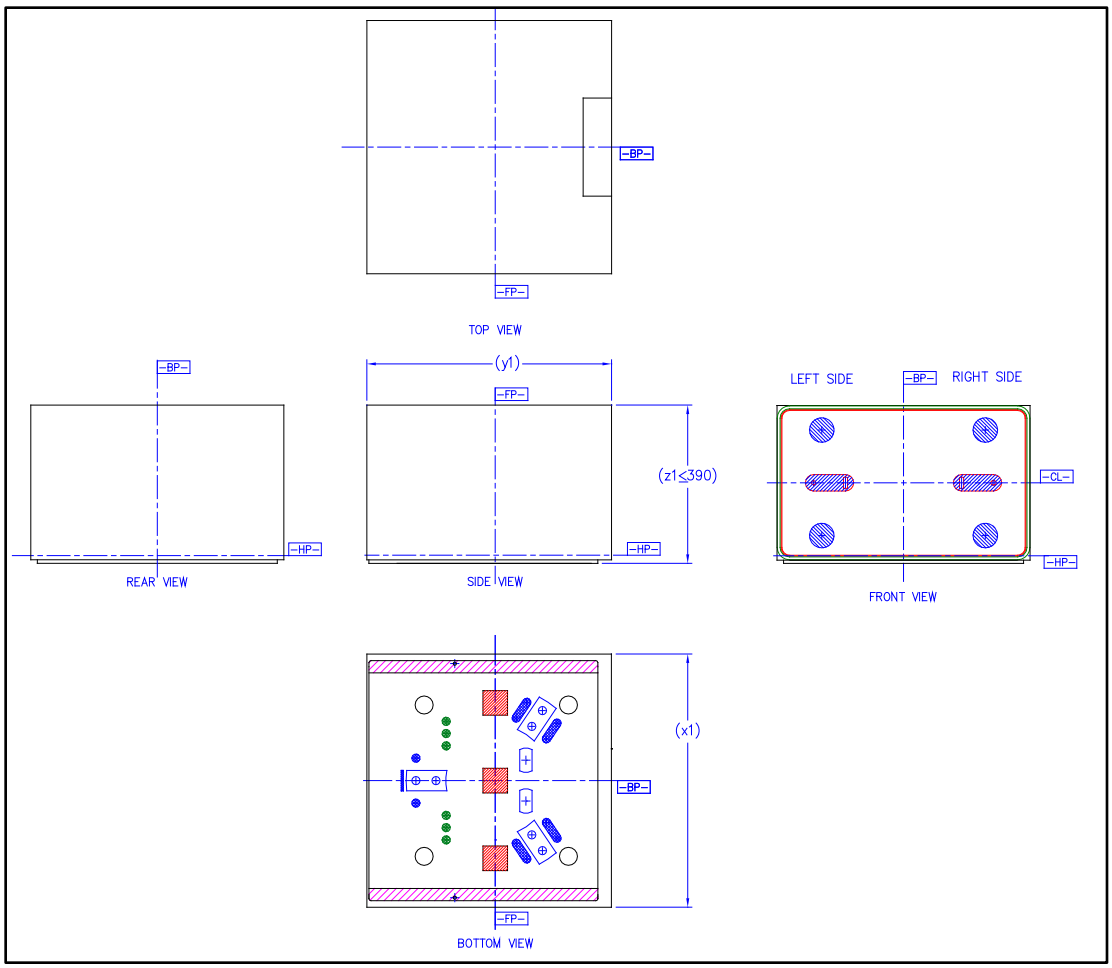

Figure 1
Overall Views of Panel FOUP

8 Requirements for Panel FOUP Envelope

8.1 The overall dimensions of the Panel FOUP, *(x1), (y1), and (z1),* are given as reference dimensions because they are derived from other dimensions. Refer to Table 2.

- $(x1) \leq x2 + x2$
- $(y1) \leq y2 + y4_{max}$
- $(z1) \leq z8_{max} + z11$

9 Requirements for Features for Automated Handling

9.1 *Center of Gravity Volume* — The Panel FOUP's center of gravity in *x* and *y* direction with the door closed shall be within a space between *y74* and *y75*, with radius of *r20* for 510 mm × 515 mm panel, or a space between *y76* and *y77*, with radius of *r20* for 600 mm × 600 mm panel. The center of gravity shall be within this volume whether the panel FOUP is empty, partly filled with panels, or fully occupied. Refer to Figure 2.

9.1.1 Appendix 2 describes a method for measuring the location of the center of gravity.

Documents
Document Sharing Hub
Full document details: SEMI E181-0424

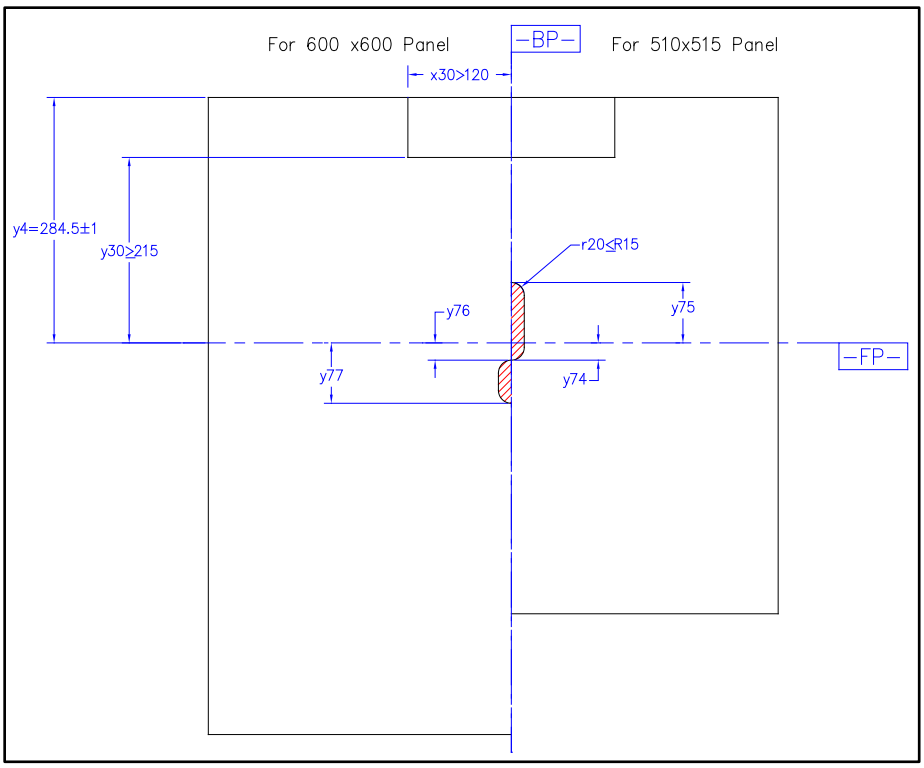

Figure 2
Center of Gravity

9.2 *Manual Handling* — A fully-loaded Panel FOUP will be too heavy for manual handling during normal production or maintenance activities. It is anticipated that manual handling will only occur when recovering from an abnormal situation. Consequently, there is no provision for manual handles.

NOTE 5: It is anticipated that a Panel FOUP for 600 mm × 600 mm panel will be a maximum of 70 kg, and a Panel FOUP for 510 mm × 515 mm panel will be a maximum of 50 kg.

9.3 *Panel FOUP Drop Protection* — The Panel FOUP drop protection zone is designed to provide a surface on the top of the Panel FOUP. The surface may be used to help restrain the FOUP during handling. The zone is located *y4* and *y30* from the FP and *x30* from the BP. The vertical location of the Panel FOUP drop protection zone is *z40* above the HP. Refer to Figure 2 and Figure 22.

10 Requirements for KC Groove

10.1 In order to achieve the proper lead-in value of *r15* and control contact pressures, certain characteristics of the kinematic groove surface on the bottom of the Panel FOUP are described in this section, and shown in Figure 3 and Figure 4.

10.2 *KC Groove Locations* — Grooves shall be provided to capture both primary and secondary pins locations. ($\theta 2$), (*x18*), (*x19*), (*y15*), (*y16*), (*y17*), and (*y18*) are provided for reference; the Panel FOUP shall be designed to interface with the dimensions and tolerances provided in the SEMI E182 for panel load ports. The CLs of the grooves are located along radii passing through the kinematic pin locations from the origin. The rear groove has its CL along the BP, while the two front grooves have their CLs at the angle ($\theta 2$) with respect to the FP.

10.3 *KC Groove Shape and Finish* — When viewed along the axis of symmetry of the groove (parallel to the HP), the angle of each wall shall be $\theta 1$ to the vertical. The height of the groove at the opening shall be *z11* beneath the HP. The shape and surface finish of the groove shall ensure that the Panel FOUP will seat fully onto the KCPs when there is an offset (lead-in error) of *r15*, allowing an empty, partially filled, or full Panel FOUP to seat completely on the KCPs so long as it is placed on the load port within *r15* from nominal. Refer to Figure 5.

Documents Document Sharing Hub
Full document details: SEMI E181-0424

10.4 *KC Groove Length* — In order to ensure capture of either the primary or secondary KCP during a physical handoff with an offset (lead-in error) of *r15*, along the length of the groove, a minimum groove length is specified. The innermost end of the front KC grooves shall be no farther than *r8* from the origin, and the outermost end of the grooves shall be no closer than *r24* from the origin. The innermost end of the rear KC groove shall be no farther than *r33* from the origin, and the outermost end of the groove shall be no less than *r9* from the origin. The KC grooves shall not interfere with the edge of the conveyor rail or other exclusion features. Refer to Figure 4 and Figure 5.

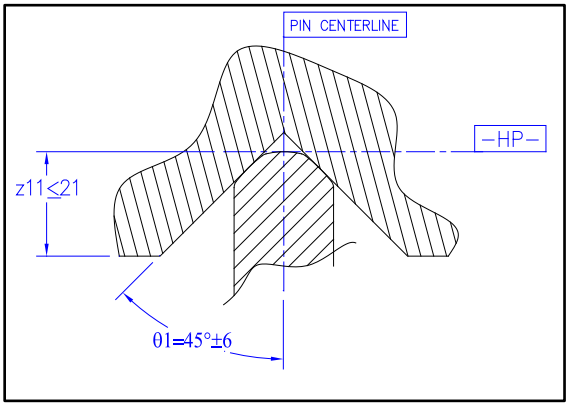

Figure 3
KC Groove Detail

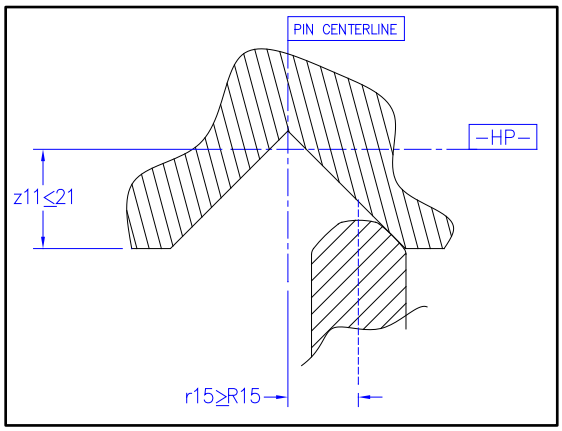

Figure 4
KC Offset

Documents
Document Sharing Hub
Full document details: SEMI E181-0424

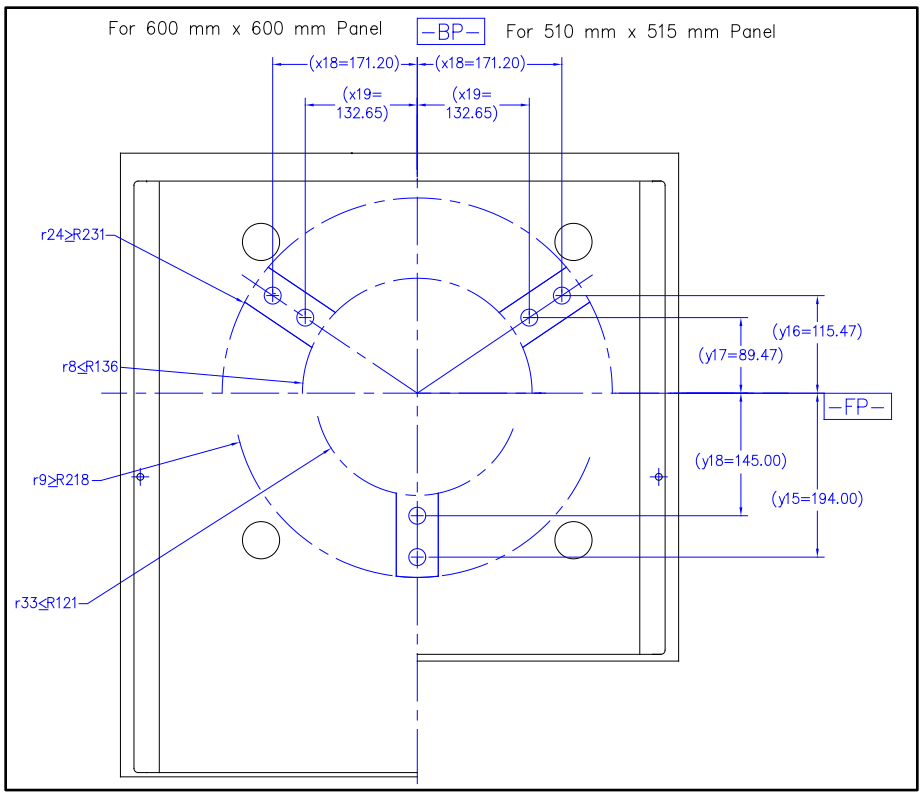

Figure 5
Bottom View – KC Groove Locations

11 Requirements for Bottom Surface Features

11.1 *Presence Sensor Feature*

11.1.1 The presence sensing features on the bottom of the Panel FOUP are designed to provide three flat, opaque areas for sensing. The load port or other systems using KCPs can use the features to determine that a Panel FOUP is present, even if misplaced (refer to the discussion in Related Information 3). The features consist of three flat, opaque areas centered along the FP of the Panel FOUP within the conveyor rails and extending *y21* to the front and rear of the FP. The center area extends *x22* to each side of the BP, and the outer areas extend from *x20* to *x9*. The vertical location of the presence sense areas is *z29* below the HP and *z49* above the HP. Refer to Figure 7 and Figure 8.

11.2 *Placement Sensor Features*

11.2.1 Placement sensing features are intended to provide defined locations to confirm proper placement of the KC grooves onto the KCPs. These consist of a set of four elongated and three circular flat areas. The elongated flat areas are located symmetrically to the front KCPs, with the outer center at approximately the same distance from the origin (at *x21* and *y22*), the distance from the outer to inner centers is approximately the same as the distance between the primary and secondary KCPs. Two of the circular flat areas are located on either side of the rear secondary KCP, and the third is in front of the rear KCPs, for use with forklifts. The flat areas shall be at a height of *z23*. Because the KCPs are not symmetrical, this configuration allows fail-safe sensing of the Panel FOUP placement. Refer to Figure 7 and Figure 8.

11.3 *Info Pads Features*

11.3.1 The info pad features of the Panel FOUP are located symmetrically about the BP, with one row of three info pads on each side. As with the placement sensing pads, the info pad features have a radius of *r21* (flat or hole per customer option). The flat surface shall be at *z50* below the HP, (with a more relaxed tolerance than *z23)*. Hole 'depth' shall be at *z24*.

Documents Document Sharing Hub
Full document details: SEMI E181-0424

11.3.2 The info pads are located *y24* from the FP, and symmetrically about the BP at distances of *x25*, *x26*, and *x27* from the BP. The six info pads are reserved for info sensors only (no mechanical lockout pins). The info pads are lettered (A thru F) to highlight that the info pads are not intended to be interchangeable.

11.3.3 The info pads are end user selectable. Refer to Related Information 1, § R1-3 for an example of how they may be specified.

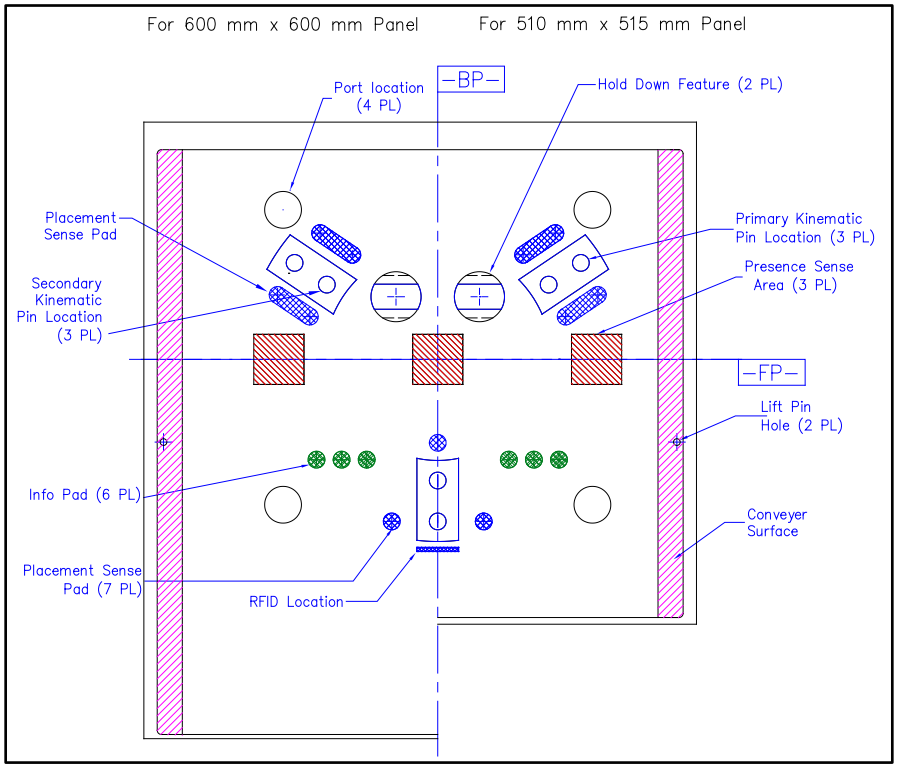

Figure 6
Bottom Features

Documents
Document Sharing Hub
Full document details: SEMI E181-0424

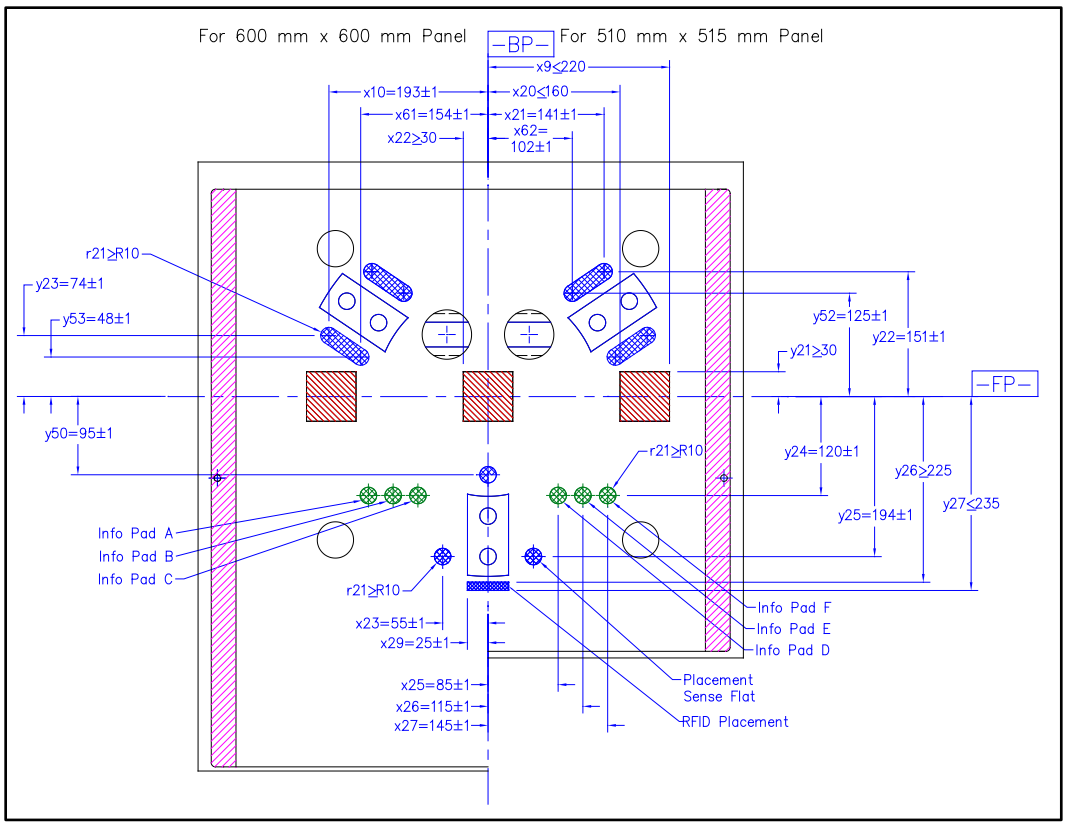

Figure 7
Bottom View of Presence, Placement, Info Pads and RFID Tag Placement

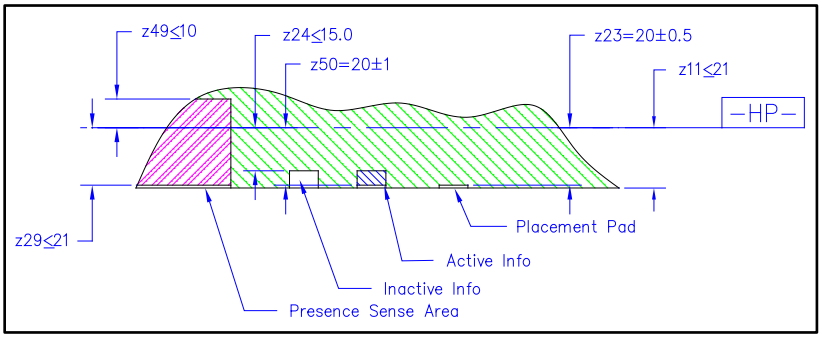

Figure 8
Sensor Pad and Hole Cross-Section

12 Requirement for RFID Tag Placement Volume

12.1 The RFID tag placement volume specifies the volume where an RFID tag can be placed. The entire RFID tag, if present, must be placed within the volume defined by *x29, y26, y27, z37*, and *z38* as shown in Figure 7 and Figure 9.

NOTE 6: SEMI E144 provides specifications for the required elements of RFID tags.

Documents Document Sharing Hub
Full document details: SEMI E181-0424

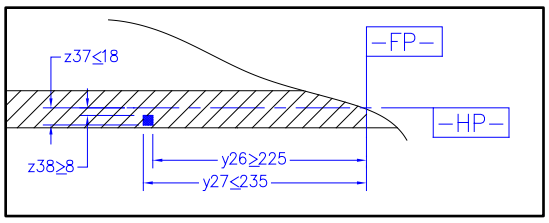

Figure 9
RFID Tag Placement Volume

13 Requirements for Panel FOUP Hold-Down Features

13.1 The hold-down features are provided by a pair of structures located symmetrically about the BP and slightly closer to the FP than the front KCPs. Each feature consists of cylindrical volume centered at *x28* and *y38* with top and bottom surfaces at HP and *z6* with radius *r7*. Each volume has an opening to the bottom of the Panel FOUP bounded by *y34*, *y35*, and *r7*. From the bottom of the opening, a vertical surface of height *z7* joins (with a small but unspecified blend radius) a sloping plane of angle *θ3* above the horizontal (and parallel to the intersection of FP and HP). This sloping plane meets the surface at *z6*. Refer to Figure 10 and Figure 11.

13.2 This configuration provides the load port with several options for holding the Panel FOUP in place not limited to the following:

- A hook shape that presses against the slope and the shelf, or
- A tee shape that passes through the rectangular opening and rotates to press down on the shelf and/or the sloping plane with or without contacting the incline. Refer to Figure 12.

13.2.1 Either (each) hold-down feature shall be able to withstand a force in any direction of *f001* without permanent damage or deformation.

13.2.2 Door opening and closing shall operate correctly with a force of *f002* applied to either (each) hold-down feature. The Panel FOUP must withstand this force without impact on its intended function.

NOTE 7: The force generated at the bottom hold down feature is related to the panel retention forces and the door sealing forces that occur during the door insertion and removal operation. Panel FOUP suppliers should consider the maximum force generated in their Panel FOUP design when designing the Panel FOUP's hold down feature.

Documents
Document Sharing Hub
Full document details: SEMI E181-0424

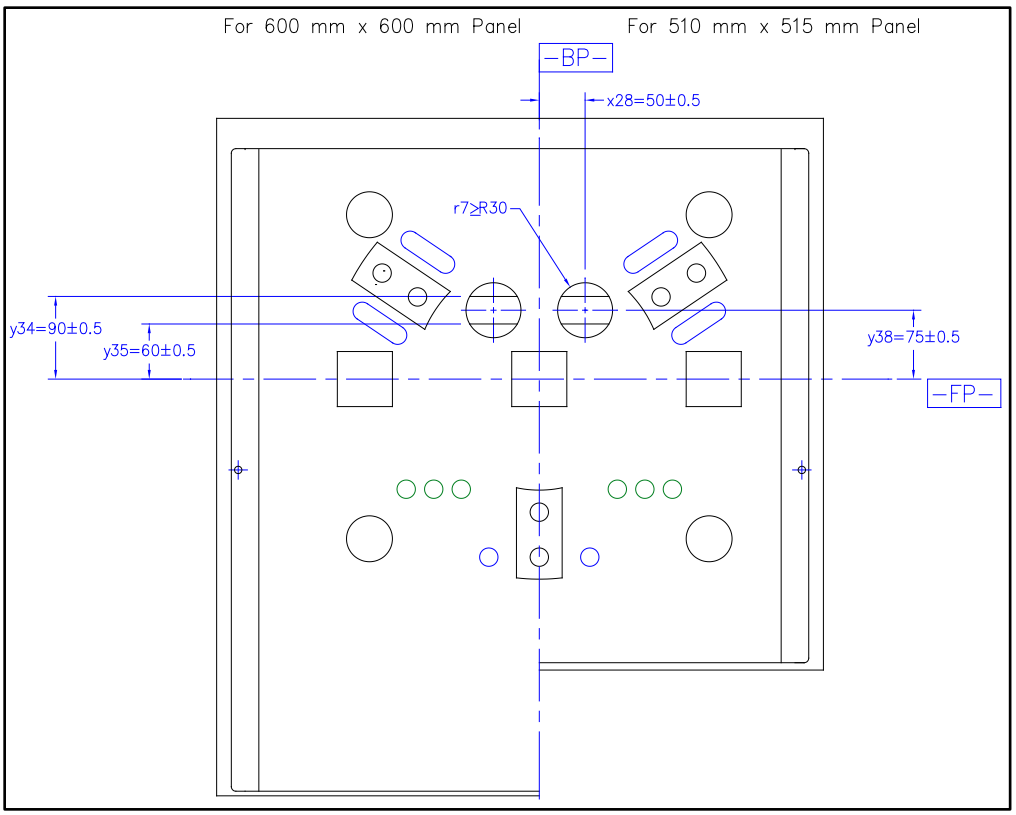

Figure 10
Hold-Down Feature Locations

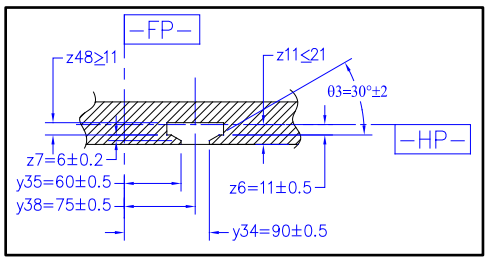

Figure 11
Hold-Down Section at *x28* = 50 mm

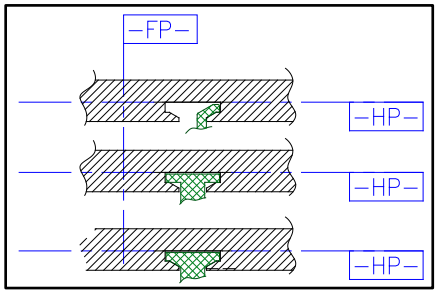

Figure 12
Hold-Down Devices

Documents
Document Sharing Hub
Full document details: SEMI E181-0424

14 Requirements for Panel FOUP Door

14.1 The Panel FOUP door is on the front of the Panel FOUP. The door and its frame must be designed to mate with a load port that conforms to SEMI E182 for panel load ports. *(x43)*, *(x44)*, *(x45)*, *(d4)*, and *(d7)* are provided for reference; the Panel FOUP shall be designed to interface with the dimensions and tolerances provided in SEMI E182 for panel load ports. The FOUP door and its frame must have surfaces that mate with seal areas, the FOUP door sensing area, and reserved areas for vacuum application. Refer to Figure 13, Figure 15, and Figure 17.

14.2 The areas for vacuum application are the four circles bounded by *r28* and located at *x49* and *z31*. The vacuum pad areas, door seal areas, and door sense areas shall be at a distance of *y4* from the FP when the door is closed and latched. No feature on the FOUP may project further from the FP than these areas. The areas reserved for vacuum pads are meant to provide a continuous, smooth surface and shall be opaque for the purpose of presence sensing.

14.3 Dimension *y39* assures that there is clearance between the door and latch keys when the FOUP is pressed against the FIMS port and both latch keys on the port are inserted to their full length. Refer to Figure 16.

14.3.1 When the latch keys are turned more than 45° toward the position that unlocks the FOUP door from the FOUP, the latch key holes on the door shall be such that the door is not removable from the latch keys.

14.4 To allow for unobstructed latch key rotation, the thickness of the outer panel of the Panel FOUP door in the area defined by *r23* shall be *y10*. Clearance for latch keys shall be provided by *y39* at *(x44)*. Clearance for door pins shall be provided by *y40* at *(x43 and x45)*. The latch keys and door pins shall be located on the CL. Refer to Figure 16.

14.5 FOUP door features are symmetrical about the CL. Features other than the openings for frame pins and door pins are symmetrical about the BP.

14.6 The opening for the door pin on the left side is circular with diameter (*d4*), and the opening on the right side is a slot. Refer to Figure 17. The purpose of these openings is to assist with FOUP door recovery when the system experiences utility loss.

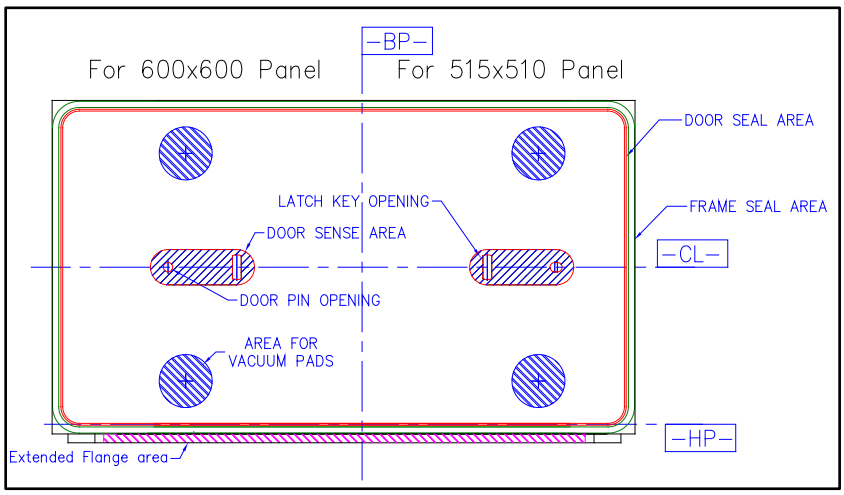

Figure 13
Panel FOUP Door Features

14.7 The frame seal area is bounded by *x11* and *x64* on the sides, by *z27* and *z34* on the top, and by *z28* and *z43* on the bottom. There are blend radii *r30* and *r36* at the inner and outer corners, respectively.

14.8 The door seal area is bounded by *x47* on the sides, and by *z33* on the top and bottom. The width of the seal area is given by *x48* and *z32*. There are blend radii of *r31* and *r32* at the outer and inner edges, respectively. Refer to Figure 15 and Related Information 1, § R1-2.10.

14.9 Downward extended flange area available for door flange given in *x65* on the sides, and by *z11* below the HP. Refer to Figure 14.

Documents
Document Sharing Hub
Full document details: SEMI E181-0424