SEMI E182-0424
SPECIFICATION FOR PANEL FOUP LOADPORT FOR PANEL LEVEL PACKAGING

This Standard was technically approved by the Physical Interfaces & Carriers Global Technical Committee. This edition was approved for publication by the global Audits and Reviews Subcommittee on February 2, 2024. Available at www.semiviews.org and www.semi.org in April 2024; originally published July 2023.

NOTICE: The section symbol (§) is used to reference a numbered section, paragraph, or header and all subordinate paragraphs, headers, and embedded material (i.e., EXCEPTIONs, lists) therein. The paragraph symbol (¶) is used to reference a particular numbered paragraph and embedded material therein. When duplicated (i.e., §§ and ¶¶) the symbols are used to reference more than one section or paragraph, respectively.

NOTICE: Paragraphs entitled 'NOTE:' are not an official part of this Standard or Safety Guideline and are not intended to modify or supersede the official Standard or Safety Guideline. These have been supplied by the global technical committee to enhance the usage of the Standard or Safety Guideline.

1 Purpose

1.1 The purpose of this Specification is to define the basic interface dimensions of a load port on the semiconductor manufacturing equipment (SME), where a Panel FOUP can be loaded and unloaded. The intention of this Specification is to define a set of requirements and features to enable interoperability of load ports and Panel FOUPs without limiting innovative solutions.

2 Scope

2.1 Since the interface specification in this Standard is driven by and intended to connect with a Panel FOUP compliant to the relevant SEMI Panel FOUP Standards, individual dimensions related to panel size are specified by the applicable Subordinate Standard of this Primary Standard.

2.2 Loading and unloading is assumed to take place in semi-automated and automated mode by using appropriate system or device (e.g., person guided vehicle or overhead hoist vehicle).

NOTICE: SEMI Standards and Safety Guidelines do not purport to address all safety issues associated with their use. It is the responsibility of the users of the Documents to establish appropriate safety and health practices, and determine the applicability of regulatory or other limitations prior to use.

3 Limitations

3.1 This Standard does not intend to address manual loading or unloading of a Panel FOUP.

3.2 The detailed methods and mechanisms inside a Panel FOUP door of how a Panel FOUP door may be engaged to and disengaged from the Panel FOUP shell are not specified within this Standard.

4 Referenced Standards and Documents

4.1 *ISO® Standards*[1]

ISO 68-1 — ISO General Purpose Screw Threads – Basic Profile – Part I: Metric Screw Threads

ISO 4287 — Geometrical Product Specifications (GPS) – Surface Texture: Profile Method – Terms, Definitions and Surface Texture Parameters

NOTICE: Unless otherwise indicated, all documents cited shall be the latest published versions.

[1] International Organization for Standardization, ISO Central Secretariat, Chemin de Blandonnet 8, CP 401-1214 Vernier, Geneva, Switzerland; Telephone: +41.22.749.01.11, Fax: +41.22.733.34.30, http://www.iso.org. ISO trademark is owned by International Organization for Standardization.

Documents Document Sharing Hub

Full document details: SEMI E182-0424

5 Terminology

5.1 *Abbreviations and Acronyms*

5.1.1 *BI* — BOLTS interface surface

5.1.2 *BP* — bilateral plane

5.1.3 *EB* — equipment boundary

5.1.4 *FP* — facial plane

5.1.5 *HP* — horizontal plane

5.1.6 *KC* — kinematic coupling

5.1.7 *KCP* — kinematic coupling pin

5.1.8 *LB* — load boundary

5.1.9 *OHT* — overhead hoist transport

5.1.10 *RFID* — radio frequency identification

5.1.11 *SME* — semiconductor manufacturing equipment

5.2 *Definitions*

5.2.1 *bilateral plane (BP)* — a vertical plane, defining x=0 of a system with three orthogonal planes (HP, BP, FP), coincident with the nominal location of the rear primary KCP, and midway between the nominal locations of the front primary KCPs. [SEMI E154]

5.2.2 *BOLTS* — used generally as a 'term' only within this Standard to identify the interface between a load port and the semiconductor manufacturing equipment. [SEMI E154]

5.2.3 *BOLTS interface surface (BI)* — a physical surface on the semiconductor manufacturing equipment intended to connect with a load port.

5.2.4 *equipment boundary (EB)* — consisting of two planes, one plane parallel to the facial plane establishing the boundary between the semiconductor manufacturing equipment and the load port (refer to dimension *y100*).

5.2.5 *facial plane (FP)* — a vertical plane, defining y=0 of a system with three orthogonal planes (HP, BP, FP), *y33*=194 ± 0 mm in front of the nominal location of the rear primary KCP. [SEMI E154]

5.2.6 *horizontal plane (HP)* — a horizontal plane, defining z=0 of a system with three orthogonal planes (HP, BP, FP), coincident with the nominal location of the uppermost points (tips) of the three KCPs. [SEMI E154]

5.2.7 *indicator placement area* — an area in which load port status indicators may be placed. [SEMI E110]

5.2.8 *load boundary (LB)* — a plane parallel to the facial plane establishing the boundary between the load port or SME and the fab aisle (refer to dimension *y101*).

5.2.9 *load height* — the distance from the horizontal plane to the fab floor.

5.2.10 *load port* — the interface location on a semiconductor manufacturing equipment, where a Panel FOUP can be loaded and unloaded.

5.2.11 *load port door* — mechanical feature on a load port surrounded by the load port frame. It can be engaged with the Panel FOUP door and together they can be moved away to allow access to panels in a Panel FOUP.

5.2.12 *load port frame* — mechanical feature on a load port surrounding the load port door. [SEMI E154]

5.2.13 *load port status indicator* — any kind of visualization means (e.g., lamp, LED, display) to indicate the status of a load port to an operator. [SEMI E110]

5.2.14 *nominal location* — the value a dimension would have if its tolerance were reduced to zero. [SEMI E154]

5.2.15 *Panel FOUP* — used generally as a 'term' only within this Standard to identify the front-opening carrier used in fabs for Panels.

Documents
Document Sharing Hub
Full document details: SEMI E182-0424

5.2.16 *plane* — a theoretical surface which has infinite width and length, zero thickness and zero curvature. [SEMI E154]

5.2.17 *spacing* — the distance from the bilateral plane of one load port to the bilateral plane of an adjacent load port on a semiconductor manufacturing equipment.

6 Ordering Information

6.1 The user should specify which of the load port options is required.

7 Requirements for KCPs

7.1 *KCP Shape* — The physical alignment interface on the bottom of the Panel FOUP consists of features that couple with six pins underneath. As shown in Figure 1 and defined in Table 1, each pin shall be radially symmetric about its vertical center axis line and can be found as the intersection of a cylinder of radius *r1* and a sphere of radius *r4* (which establishes the tip of the pin and might contact a flat plate). The radius *r4* shall be centered on the axis of symmetry at a height *z3* below the HP. An additional radius *r3* establishes the contact with the angled aligning groove surface on the Panel FOUP. The center of the radius *r3* shall be defined by the intersection of a vertical plane through the axis of symmetry of the pin with the horizontal circle of radius *r2* at the height *z4* below the HP. A blend radius of *r5* shall be applied at the intersection of *r1* and *r3*, and at the intersection of *r3* and *r4*. The minimum height of the pin shall be *z4. S*urface finish roughness shall be R_a1, as defined by ISO 4287, of all features defined by *r1*, *r3*, *r4*, and *r5*. Dimensions *r2*, *z3*, and *z4* have zero tolerance because they only define offsets and not physical features.

7.2 *KCP Location*s — The KCPs shall be arranged in three sets with two pins in each set, as shown in Figure 2. The outer pins of each set are designated the primary pins for use on a load port or vehicle nest, and the inner pins are designated the secondary pins for use on a robotic arm used to pick up a Panel FOUP from the primary pins. The rear pins (farthest from the door) shall be located on the BP, at a distance from the FP of *y18* for the secondary pin and *y15* for the primary pin. The front primary pins shall be located at a distance of *y16* from the FP, symmetric across the BP with distance *x18* from the BP. The front secondary pins shall be located at a distance of *y17* from the FP, symmetric across the BP with distance *x19* from the BP. For reference only, the front KCPs are located symmetrically with respect to the BP at an angle of *(θ2)*.

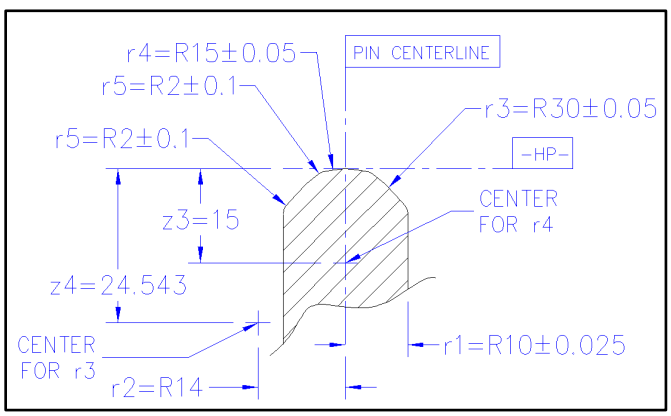

Figure 1
KCP

Documents Document Sharing Hub
Full document details: SEMI E182-0424

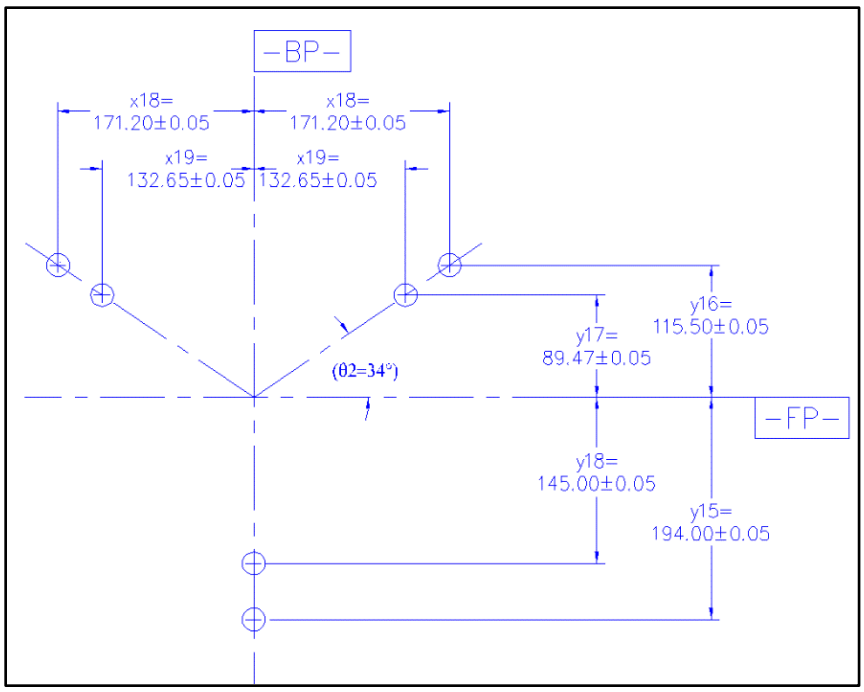

Figure 2
Bottom View – KCP Locations

Table 1 Dimensions of KCP

Symbol Used	*Figure*	*Value Specified*	*Datum Measured From*	*Feature Measured To*
(θ2)	2	(34.0 degrees)	BP	Axis of symmetry of front pin-mating grooves
r1	1	10.0 ± 0.025 mm	Centerline of KCP	Cylindrical (side) surface of KCP
r2	1	14 ± 0 mm	Centerline of KCP	Circle to define center of curvature of KCP contact surface
r3	1	30.0 ± 0.05 mm	Circle defined by *r2* and *z4*	Contact surface of KCP
r4	1	15.0 ± 0.05 mm	Centerline of KCP and *z3*	Top surface of KCP (sphere)
r5	1	2.0 ± 0.1 mm	Blend radius	Surface between KCP contact surface and adjacent surfaces
R_a1	¶ 7.1	≤0.30 µm	N/A	Kinematic Coupling Pin surface finish roughness per ISO 4287
x18	2	171.20 ± 0.05 mm	BP	Location of front primary KCP
x19	2	132.65 ± 0.05 mm	BP	Location of front secondary KCP
y15	2	194.00 ± 0.05 mm	FP	Location of rear primary KCP
y16	2	115.50 ± 0.05 mm	FP	Location of Front Primary KCP
y17	2	89.47 ± 0.05 mm	FP	Location of front secondary KCP
y18	2	145.00 ± 0.05 mm	FP	Location of rear secondary KCP
z3	1	15 ± 0 mm	HP	Point on KCP centerline to define KCP top surface, *r1*
z4	1	24.543 ± 0 mm	HP	Center of radius, *r3*

Documents
Document Sharing Hub
Full document details: SEMI E182-0424

8 Requirements for Interface Between Load Port and Panel FOUP Delivery System

8.1 *Load Height* — The nominal load height of any load port in a fab is defined by dimension *z101* and depicts the nominal distance from the horizontal plane to the floor. A set of load ports, but not necessarily each load port separately, must be adjustable at installation over the range associated with *z101* in Table 2. This adjustability requirement also applies for load ports according to Option C (raised load port).

8.2 *Aisle Clearance of Load Port* — No part of a load port or SME shall protrude beyond the load boundary (LB) as measured from the BOLTS interface surface. Refer to dimension *y101*.

NOTE 1: There is no requirement for any kind of physical plate of a certain height or shape at the load boundary.

8.3 *Clearance Above Load Port and Below Panel FOUP* — No part of the load port except those features intended for interaction with the Panel FOUP (e.g., KC pins, Panel FOUP hold-down features) shall protrude above dimension *z160*. There shall be no interference between any part of the load port and the Panel FOUP when delivered within the lead-in range defined in the Panel FOUP Standard.

8.4 *Vertical Clearance for Overhead Transport* — To provide clearance for overhead Panel FOUP transport, no part of the equipment (including the Panel FOUP on a load port) in front of a plane defined by the EB (towards the LB) and the entire width of the SME shall be higher than *z100* from the floor. The volume below *z100* may contain Panel FOUPs stored in an internal buffer. Additionally, no part of the overhead transport system shall protrude below *z102*.

8.5 *Horizontal Clearance for Overhead Transport* — No part of the SME shall protrude towards the facial plane (FP) beyond the EB as defined by dimension *y100*. The vertical 'chimney' between both of the equipment boundaries and the LB above the HP as defined by dimensions *y100, y101,* and *x143* must not be occupied by the SME.

8.6 *Radio Frequency Identification (RFID) Reader/Writer Placement Volume* — A load port must allow for installation of a unit that can read from or write to an RFID tag (as it may be installed in the corresponding placement volume on the rear of a panel FOUP) within the limits of a volume defined by *x110, y110, y111, z110, z111*. Reading/writing is intended to take place with the Panel FOUP in a position as initially delivered to the load port (undocked position). If no reader/writer unit is installed, this placement volume may be covered.

NOTE 2: As a consequence of the requirement defined above, any RFID reader/writer unit must fit in the placement volume defined above.

NOTE 3: RFID reader/writer within this context is understood as those parts that must be located within this volume in order to be able to communicate with the tag on the Panel FOUP. Usually this is the antenna. Other components of an RFID reader/writer system are not necessarily required to be placed within this volume.

8.7 *Numbering of Load Ports* — On each SME, load ports are physically numbered in increasing order (beginning with 1) from left to right (in relation to a person facing the FP) beginning with load ports that are nominally at the lowest position and then continuing (from left to right) with any load ports that are higher.

8.8 *Spacing* — Load ports adjacent to each other on the SME shall be located at a distance as defined by dimension *x100*.

8.9 *Photo-Coupled I/O Device Placement Volume* — In the lower area of each load port there shall be volume, defined by *x120, y120*, the LB, *z121*, and *z122*, allowing for placement of a photo-coupled I/O device for communication to floor-based transport vehicles. This placement volume is centered on the bilateral plane (BP).

8.9.1 A photo-coupled I/O device may be installed anywhere within this placement volume upon the discretion and design requirements of the load port supplier. However, the center of its beam line shall be within the vertical limits defined by dimension *z120*. In horizontal direction (perpendicular to the FP) the beam line must also be centered to the BP within the same limits as defined by the tolerance associated to *z120*.

8.9.2 If no photo-coupled I/O device is installed, the placement volume may be covered by a panel.

NOTE 4: A photo-coupled I/O device is much smaller than the placement volume defined above, thus providing some design freedom for device mounting. Typical I/O devices have a depth of 20 mm to 70 mm. The load port supplier is free to mount the I/O device either closer to the LB or closer to the EB, depending on the actual design of the load port. If the lower part of a load port is recessed from the LB, it may be desirable to mount the device still inside the LP housing by utilizing the full depth of the placement volume.

8.10 *Equipment Front* — A part on the front of the SME protruding furthest towards the FP is defined as the equipment front. The equipment front shall not penetrate the EB.

Documents Document Sharing Hub
Full document details: SEMI E182-0424

NOTE 5: While the EB is a virtual boundary plane at a fixed distance from the BOLTS interface surface (BI), the equipment front is a physical feature.

8.11 *Volume for Fork-Lift Truck* — The entire volume below a load port between the LB and the BI shall be kept clear up to height above the floor defined by dimension *z107* and *x142* in order to allow for access by a fork-lift truck upon equipment move-in. The volume may be covered by a removable panel. Refer to Figure 8 for a sketch of the volume.

8.11.1 *Volume for PGV Legs* — The entire volume below a load port between the LB and y142 shall be kept clear up to height above the floor defined by dimension *z105* and *x142* in order to allow for access by PGV with legs to support the center of gravity of Panel FOUP. Refer to Figure 8 for a sketch of the volume.

8.12 *Fork-Lift Exclusion Volume on Load Port Below Panel FOUP* — Two exclusion volumes on the left and right side of the load port shall be kept clear so that fork-lifts or conveyors may be used to load/unload a Panel FOUP to/from a load port. These exclusion volumes are defined by *x140, x141, y140, y141, z140*, and *z141*.

8.13 *Alignment Mark on Load Port* — In order to support alignment and verification a load port shall have a visible mark (cross-hair) to depict the intersection of the FP and BP.

8.14 *Alignment Feature on SME* — The BI was chosen in this Standard to reference dimensions in horizontal (*y*) direction since it is the most accurate stationary and nonadjustable feature on the SME with respect to the load port.

8.14.1 Because the BI may not be accessible when a load port is attached, a rigid, always exposed feature on the SME shall exist to support alignment of the SME to the Panel FOUP transport system upon move-in and install.

8.14.2 For that purpose, the BI shall extend vertically beginning at the minimum value of *z379* from the HP and shall be exposed over its entire width and over a height defined by dimension *z384* (refer to Figure 15).

8.15 *Options* — SME can be configured with a variety of load port combinations chosen from the options defined in this section. If no option is specified, Option A is assumed. The three-dimensional sketches within the options sections are for illustration. Dimensional requirements are shown in the figures at the end of the entire section.

NOTE 6: Volumes depicted for certain purposes (e.g., for a load port or for Panel FOUP buffering), do not preclude the placement of items like EMO, light tower, and GUI within these volumes.

NOTE 7: Options are shown symmetrically with two load ports for clarity. However, configurations with one load port only as well as asymmetrical configurations are not excluded.

8.15.1 In Option A, the load port is at the nominal load height as specified by dimension *z101*, and it is open from above to facilitate automatic Panel FOUP delivery from an overhead transport system. The volume left and right of the load port may be occupied by the SME, with a side clearance of *x144* between any part of the SME on the side of the load port above *z160*.

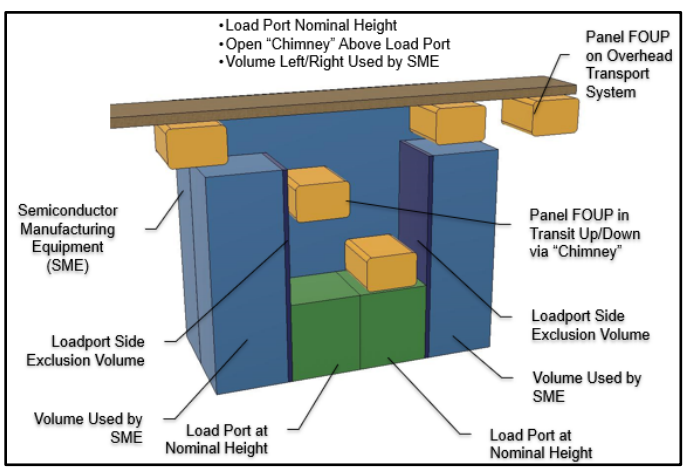

Figure 3
Three-Dimensional View of Option A

Documents
Document Sharing Hub
Full document details: SEMI E182-0424

8.15.2 Option B is identical to Option A with the exception that the volume left and right of the load port over the entire width of the SME is used for Panel FOUP buffering.

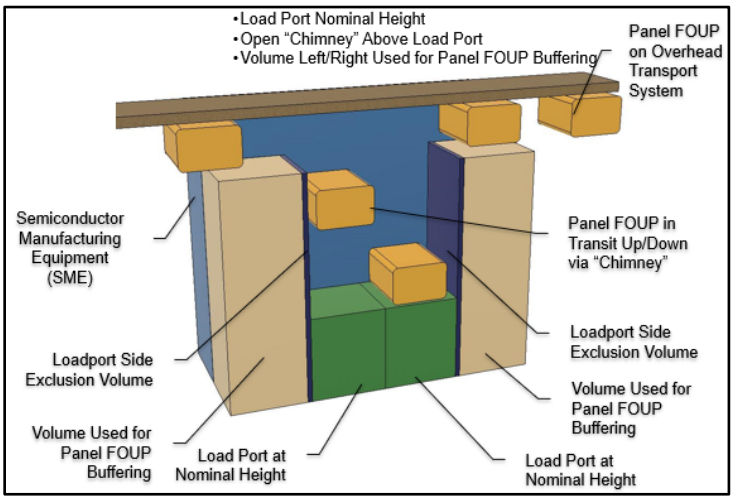

Figure 4
Three-Dimensional View of Option B

8.15.3 In Option C the distance from the HP of the load port may be at any height above *z101* that leaves the top of the Panel FOUP under *z100*.

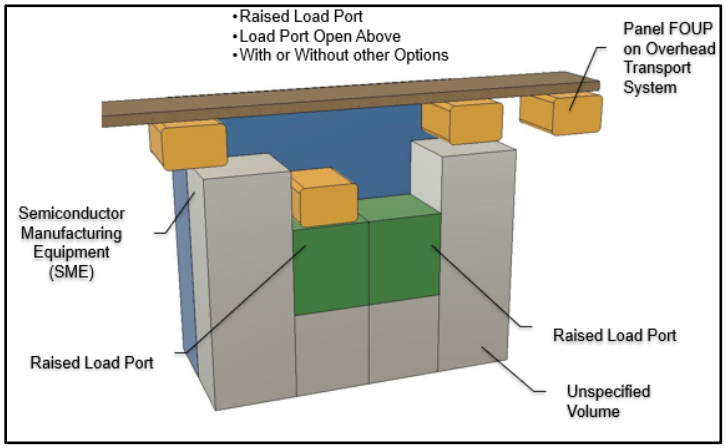

Figure 5
Three-Dimensional View of Option C

8.15.4 In Option D the load port is at the nominal load height as specified by dimension *z101*, is not open from above, and it has a clearance around the Panel FOUP as specified by dimensions *z103* and *x143*.

Documents Document Sharing Hub
Full document details: SEMI E182-0424