SEMI E185-1221
SPECIFICATION FOR 300 mm TAPE FRAME FOUP

This Standard was technically approved by the Physical Interfaces & Carriers Global Technical Committee.
This edition was approved for publication by the global Audits and Reviews Subcommittee on July 13, 2021.
Available at www.semiviews.org and www.semi.org in December 2021.

NOTICE: Paragraphs entitled 'NOTE:' are not an official part of this Standard or Safety Guideline and are not intended to modify or supersede the official Standard or Safety Guideline. These have been supplied by the global technical committee to enhance the usage of the Standard or Safety Guideline.

NOTICE: The section symbol (§) is used to reference a numbered section, paragraph, or header and all subordinate paragraphs, headers, and embedded material (i.e., EXCEPTIONs, lists) therein. The paragraph symbol (¶) is used to reference a particular numbered paragraph and embedded material therein. When duplicated (i.e., §§ and ¶¶) the symbols are used to reference more than one section or paragraph, respectively.

1 Purpose

1.1 The purpose of this Specification is to establish basic physical dimensions for the Tape Frame FOUP which is intended to be used to transport and store 300 mm tape frames, as specified by SEMI G74 and SEMI G87, within IC manufacturing facilities.

2 Scope

2.1 This Standard specifies the external features and dimensions of the Tape Frame FOUP.

2.2 This Standard specifies the internal dimensions for storing the tape frames in the Tape Frame FOUP.

2.3 This Standard specifies the areas to ensure automated installing and extracting the tape frames by end effectors.

2.4 This Standard specifies the external dimensions of interfaces for automation tools which are designed for interacting with the Tape Frame FOUP.

NOTICE: SEMI Standards and Safety Guidelines do not purport to address all safety issues associated with their use. It is the responsibility of the users of the Documents to establish appropriate safety and health practices, and determine the applicability of regulatory or other limitations prior to use.

3 Limitations

3.1 The detailed methods and mechanisms inside a 300 mm Tape Frame FOUP door as to how the door is engaged to and disengaged from the shell are not specified by this Specification.

3.2 A fully loaded FOUP will be too heavy for manual handling during normal production or maintenance activities. It is anticipated that manual handling will only occur when recovering from an abnormal situation. Consequently, there is no provision for manual handles.

4 Referenced Standards and Documents

4.1 *SEMI Standards and Safety Guidelines*

SEMI E57 — Specification for Kinematic Couplings Used to Align and Support 300 mm Wafer Carriers

SEMI G74 — Specification for Tape Frame for 300mm Wafers

SEMI G87 — Specification for Plastic Tape Frame for 300mm Wafer

NOTE 1: A Document covering specification of Load Port that is correspond to this Standard is under development by the Physical Interface & Carriers Global Technical Committee.

NOTICE: Unless otherwise indicated, all documents cited shall be the latest published versions.

SUPERSEDED

Documents Document Sharing Hub
Full document details: SEMI E185-1221

5 Terminology

5.1 *Abbreviations and Acronyms*

5.1.1 *BDP* — bilateral datum plane

5.1.2 *CL* — centerline

5.1.3 *EE* — end effector

5.1.4 *FDP* — facial datum plane

5.1.5 *FOUP* — front-opening unified pod

5.1.6 *HDP* — horizontal datum plane

5.1.7 *KC* — kinematic coupling

5.1.8 *RFID* — radio frequency identification

5.2 *Definitions*

5.2.1 *bilateral datum plane (BDP)* — a vertical plane that bisects the wafers and that is perpendicular to both the horizontal and facial datum planes. [SEMI E57]

5.2.2 *capacity* — the number of frames that a Tape Frame FOUP holds.

5.2.3 *centerline (CL)* — a horizontal line centered vertically on the carrier door used as the reference for z dimensions of door features. [SEMI E158]

5.2.4 *carrier bottom domain* — volume (below *z6* above the horizontal datum plane) that contains the bottom of the carrier. [SEMI M31]

5.2.5 *carrier sensing pads* — surfaces on the bottom of the carrier for triggering optical or mechanical sensors. [SEMI M31]

5.2.6 *carrier top domains* — volume (higher than *z15* above the top nominal frame plane) that contains the top of the carrier. [SEMI M31]

5.2.7 *facial datum plane (FDP)* — a vertical plane that bisects the FOUP and that is parallel to the front side of the carrier (where frames are removed or inserted). On tool load ports, it is also parallel to the load face plane on the side of the tool where the carrier is loaded and unloaded. [SEMI E57]

5.2.8 *frame* — tape frame.

5.2.9 *front (of carrier)* — the part of the carrier closest to the door. [SEMI E158]

5.2.10 *front-opening unified pod (FOUP)* — front opening type box/pod with a non-removable cassette. [SEMI E101]

5.2.11 *horizontal datum plane (HDP)* — a horizontal plane from which projects the kinematic-coupling pins on which the carrier sits. On tool load ports, it is at the load height and might not be physically realized as a surface. [SEMI E57]

5.2.12 *rear* — the part of the carrier farthest from its door [SEMI E158]

5.2.13 *shelf* — a structure that holds tape frames.

5.2.14 *shell* — a part of FOUP collaborating with a door on the front side to isolate, hold, and protect works inside.

5.2.15 *tape frame* — the frame which applies the wafer tape to the wafer and retains the wafer. [SEMI G74]

5.2.16 *Tape Frame FOUP* — FOUP that contains tape frames.

5.2.17 *tape frame extraction volume* — the open space for extracting a tape frame from the Tape Frame FOUP.

5.2.18 *tape frame pick-up volume* — the space that contains entire bottom of a tape frame if the tape framer has been pushed to the rear of the Tape Frame FOUP.

5.2.19 *tape frame set-down volume* — the open space for inserting and setting down a tape frame in the Tape Frame FOUP.

SUPERSEDED

Documents
Document Sharing Hub
Full document details: SEMI E185-1221

5.2.20 *wafer tape* — an adhesive plastic tape which retains the wafer or diced chip. [SEMI G88]

NOTE 2: Unless otherwise specified, the words 'carrier' and 'FOUP' herein shall mean Tape Frame FOUP.

6 Ordering Information

6.1 *Capacity* — The purchaser of the Tape Frame FOUP needs to specify the capacity (13 or 25).

6.2 *Info Pad Configurations* — The purchaser of the Tape Frame FOUPs needs to specify the desired info pad configuration (up or down). Info Pad A is recommended (but not limited) to use for indicating the capacity of the Tape Frame FOUP. In general, info pad A is set in down position (at *z2* above the horizontal datum plane [HDP]) if the Tape Frame FOUP capacity is 13 and is set in up position (at *z26* above HDP) if the capacity is 25 frames.

Table 1 Ordering Information Check List

Optional Feature		*Choice*
Frame Capacity		☐ 13 or ☐ 25
Info Pad	A	☐ up or ☐ down
	B	☐ up or ☐ down
	C	☐ up or ☐ down
	D	☐ up or ☐ down

7 Requirements

7.1 *FOUP Envelope* — The overall dimensions of the Tape Frame FOUP, *(x0)*, *(y0)*, and *(z0)*, are given as reference dimensions because they are derived from other dimensions (see Figure 1 and Table 2). The Tape Frame FOUP shall not have any part or component beyond these dimensions.

SUPERSEDED

Documents Document Sharing Hub
Full document details: SEMI E185-1221

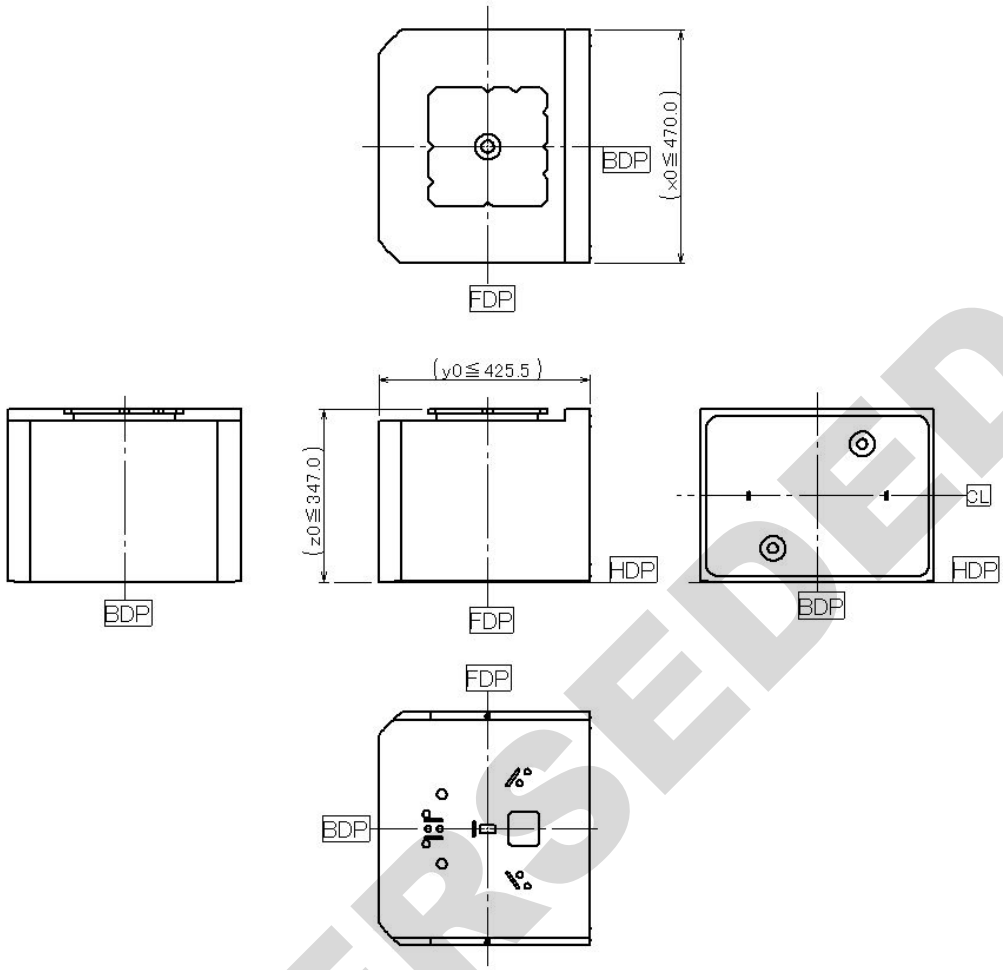

Figure 1
FOUP Envelope

Table 2 Derivation of Reference Dimensions

Symbol	*Value*	*Formula*
(x0)	≤470	≤*x53* + *x53*
(y0)	≤425.5	*y52* + *y53*
(z0)	≤347	≤*z47* + *z49*

#1 Unless otherwise noted, all dimensions are in mm.

7.2 *Inner and Outer Radii* — All required concave features may have a radius to allow cleaning and to prevent contaminant build-up. All required convex features may also have a radius to prevent small contact patches with large stresses that might cause wear and particles.

7.3 *Door* — The Tape Frame FOUP shall have a door on the front side of the shell. See Figure 2.

7.3.1 *Door Centerline (CL)* — The horizontal reference plane of the door is given as CL, which is parallel to the HDP and *z30* above from HDP.

7.3.2 *Thickness* — The thickness of the FOUP door shall be within *y92*.

7.3.3 *Door Seal Area* — The door shall have the seal area surface which is located at *y52* from the facial datum plane (FDP) and specified by *r32*, *r33*, *x32*, *x33*, *z32*, and *z33*. This surface shall have flatness within *y42*.

SUPERSEDED

Documents
Document Sharing Hub
Full document details: SEMI E185-1221

7.3.4 *Door Sensing Area* — The door shall have the sensing area surface which is located at *y52* from FDP and specified by *r91*, *r92*, *x31*, and *z31*. This surface shall have flatness within *y42*. This surface can also be used for vacuum applications.

7.3.5 *Door Frame Seal Area* — The door frame shall have the seal area surface which is located at *y52* from FDP and specified by *r34*, *r35*, *x34*, *x35*, *z34*, and *z35*. This surface shall have flatness within *y42*.

7.3.6 *Latching Mechanism* — The door shall have two latch holes for latching mechanism operated by load port designed for the Tape Frame FOUP.

7.3.6.1 *Rotation of Latching Mechanism* — Inside the door, the door shall have latching mechanism which can be rotated between ψ_1 (unlatching position) and ψ_2 (latching position). The direction of the rotation from unlatch position to latch position shall be anticlockwise when seeing from the door front side.

7.3.6.2 *Latch Hole* — The door shall have two latch holes which meet latch pins equipped on the load port to lock and unlock the door. The center of the latch hole shall be on the CL and at *x30* from the bilateral datum plane (BDP). The size of the latch holes is specified by *r36 and x36*. If the door has certain freedom along with the directions parallel to FDP, the latch holes shall allow for the secure insertion of the latch keys of the load port which is designed for the Tape Frame FOUP.

7.3.6.3 *Latch Torque* — When the door is placed at the nominal position, the torque to rotate the latching mechanism shall be within *f30* for both open and close direction.

7.3.7 *Registration Hole* — The door shall have two registration holes which meet registration pins installed on the load port. The one of the registration pins shall be at upper right and the other shall be lower left seeing from the door surface side. The center of the registration pin holes shall be at *x31* from BDP and *z31* from CL. The radius of the holes shall be *r37*. If the door has certain freedom along with the directions parallel to FDP, the registration holes shall allow for the secure insertion of the registration pins of the load port which is designed for the Tape Frame FOUP.

7.3.8 *Door Closure Force* — The door shall be able to close within the closure force of *f34*.

SUPERSEDED

Documents Document Sharing Hub
Full document details: SEMI E185-1221

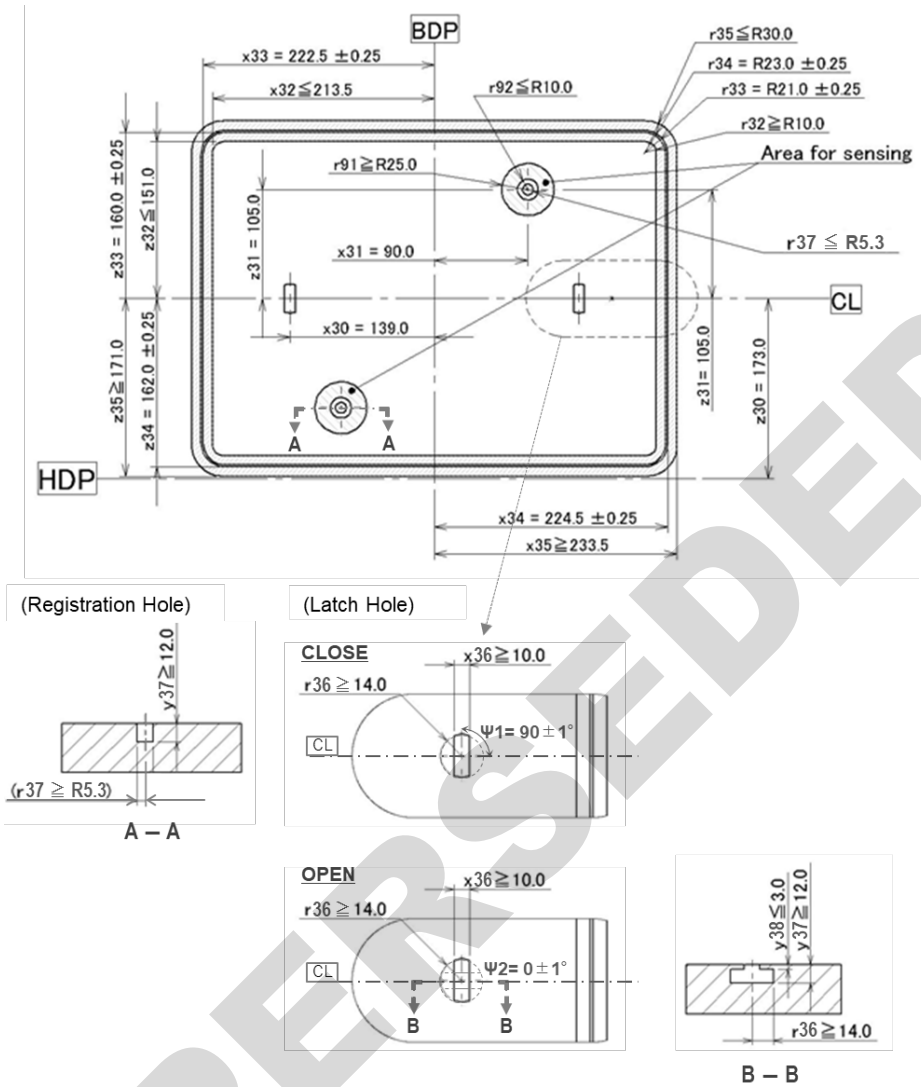

Figure 2
Door Dimensions

7.4 *Interior*

7.4.1 *Frame Retaining* — When the FOUP is closed, the Tape Frame FOUP shall retain the frames in the shell to prevent movement during transport.

7.4.2 *Frame Centering* — The Tape Frame FOUP shall have a feature to push the frames gently to the rear of the shelf to center them.

7.4.3 *End Effector (EE) Exclusion Volume* — The EE exclusion volume is specified by *r4*, *r5*, r6, *x1*, *x2*, *x3*, *x52*, *x53*, *y49*, *y52*, *y53*, *z6*, and *z15*. The hatched area in Figure 3 shows a horizontal cross section of this volume. The bottom of this volume is above *z6* from HDP and above *z15* from the frame plane of the top slot (see Figure 4). When the door is removed, the Tape Frame FOUP shall not have any part in the EE exclusion volume.

7.4.4 *First Slot Height* — The Tape Frame FOUP shall have the first slot at *z8* above HDP, which is given as a value with no tolerance. The tolerance of the first slot shall be within *z10*. See Figures 4 and 5.

7.4.5 *Slot Pitch* — The distance between adjacent nominal frame seating planes of the Tape Frame FOUP shall be *z12*, which is given as a value with no tolerance. See Figures 4 and 5.

SUPERSEDED

Documents
Document Sharing Hub
Full document details: SEMI E185-1221

7.4.6 *Slot Height Tolerance* — The tolerance of each slot height shall be within *z10*. This means the sum of actual height variation from HDP to each slot shall be contained within the tolerance of *z10* with no further stack-up at each higher frame. See Figure 5.

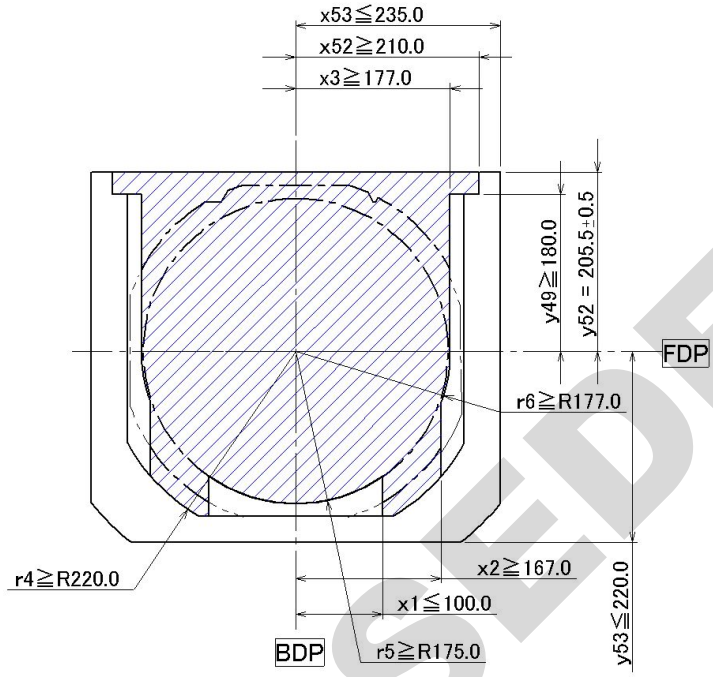

Figure 3
Horizontal Cross Section of EE Exclusion Volume

SUPERSEDED

Documents Document Sharing Hub
Full document details: SEMI E185-1221

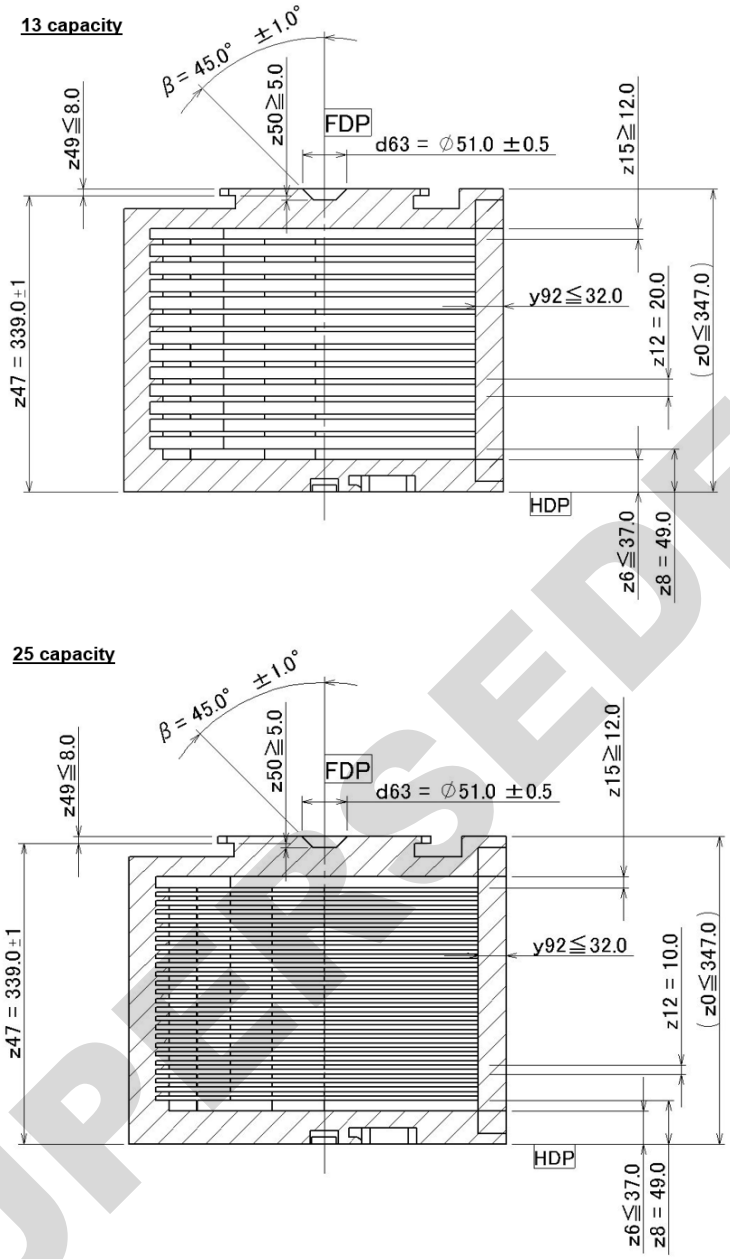

Figure 4
Vertical Cross Section at Facial Datum Plane

SUPERSEDED

Documents
Document Sharing Hub
Full document details: SEMI E185-1221