SEMI E19-0117
STANDARD MECHANICAL INTERFACE (SMIF)

This Standard was technically approved by the Physical Interfaces & Carriers Global Technical Committee. This edition was approved for publication by the global Audits and Reviews Subcommittee on August 31, 2016. Available at www.semiviews.org and www.semi.org in January 2017; originally published in 1991; previously published December 2013.

NOTE 1: This Standard has been purposely restricted to 100 mm (4 in.), 125 mm (5 in.), and 150 mm (6 in.) versions of the SMIF port. This has been done to establish a base for SMIF port standardization. Aspects of the 200 mm (8 in.) version have been negotiated by interested parties and published as SEMI E19.4.

1 Purpose

1.1 A standard interface is required for containers intended to control the transport environment of cassettes containing wafers or disks. The interface must address the proper container orientation for material transfer and maintain continuity between the container and equipment environment in order to control particulate matter.

2 Scope

2.1 This Specification describes one approach to interfacing a clean cassette transport box to a clean environmental housing on a piece of semiconductor processing equipment or to other clean environments. The system concept involves mating a door on a cassette container to a door on an equipment canopy and transferring the cassette into, and out of, the equipment without exposing the cassette and wafers to outside contamination.

NOTICE: SEMI Standards and Safety Guidelines do not purport to address all safety issues associated with their use. It is the responsibility of the users of the Documents to establish appropriate safety and health practices, and determine the applicability of regulatory or other limitations prior to use.

3 Impact

3.1 The incorporation of this Standard requires equipment designers to include the features of the interface into the tool design. Spacing between open cassette ports is inadequate for incorporation of this interface. Designers are directed to the recommendations made in SEMI E15 in this regard.

4 Limitations

4.1 This Standard is specific to the size of the designated wafer and references the appropriate SEMI cassette and wafer diameter. A single numerical suffix is assigned to this base standard number or each wafer diameter. This specification focuses on applications in which the interface port is positioned horizontally. The standard is focused exclusively on the box-to-canopy interface. Other considerations of box and equipment design are purposely excluded.

NOTE 2: Hewlett-Packard has stated that it is seeking patent coverage for this design and is offering nonexclusive licenses on an equal basis to any company. Companies intending to manufacture products to this Standard should be aware of Hewlett-Packard's position.

NOTE 3: The user's attention is called to the possibility that compliance with this Standard may require use of an invention covered by patent rights. By publication of this Standard, SEMI takes no position with respect to the validity of any patent rights asserted in connection with any item mentioned in this Document. Users of this Document are expressly advised that determination of any such patent rights and the risk of infringement of such rights are entirely their own responsibility.

5 Referenced Standards and Documents

5.1 *SEMI Standards and Safety Guidelines*

SEMI E1 — Specification for Open Plastic and Metal Wafer Carriers

SEMI E15 — Specification for Tool Load Port

SEMI E111 — Mechanical Specification for a 150mm Reticle SMIF Pod (RSP150) Used to Transport and Store a 6 Inch Reticle

NOTICE: Unless otherwise indicated, all documents cited shall be the latest published versions.

SUPERSEDED

Documents Document Sharing Hub
Full document details: SEMI E19-0117

6 Terminology

6.1 See Figure 1 for a pictorial depiction of most terms.

6.2 *Definitions*

6.2.1 *box* — an environmentally controlled enclosure for a cassette containing wafers or disks. For purposes of this Standard, a box has features that conform to the specified interface. A box includes a box door and box latches. (A box is also referred to as a *container*.)

6.2.2 *box door* — a removable bottom for the box that contains a means (such as registration holes) for properly positioning the wafer cassette.

6.2.3 *box latches* — mechanical latches that hold the box door in position until activated by the latch pins. Upon activation, a portion of each box latch engages a latch cavity and smaller, thereby locking the box to the port plate.

6.2.4 *guide rail* — a component of a port plate that provides coarse location for placing the box on the port assembly.

6.2.5 *latch cavities* — spaces located in the port assembly guide rails that accommodate the box latches in the open position of the box door.

6.2.6 *latch pins* — pins that engage the box latches and accomplish the lock/unlock functions. Latch pins are on the port plate.

6.2.7 *pod* — a box having a standardized mechanical interface.

6.2.8 *port* — a port assembly appropriately sized for the wafers or disks that are to be transferred. Three port sizes are specified for the purposes of this Standard: 100 mm (4 in.) for 100 mm (4 in.) wafer cassettes, 125 mm (5 in.) for 125 mm (5 in.) wafer cassettes, and 150 mm (6 in.) for 150 mm (6 in.) wafer cassettes.

6.2.9 *port assembly* — an assembly of the port plate and port door that includes the guide rails, registration pins, latch pins, and latch cavities.

6.2.10 *port door* — a door for the port plate opening that provides a mating surface for the bottom of the box door when the box is in place on the port plate. The port door contains the registration pins.

6.2.11 *port plate* — a horizontal mating surface for the base of the box that provides a seal surface to the bottom surface of the box perimeter. The port plate contains the guide rails and the latch pins.

6.2.12 *registration holes* — holes in the bottom of the box door that fit over registration pins in the top of the port door when the box is placed on the port door.

6.2.13 *registration pins* — pins that provide fixed position and orientation between the port door and box door and assist in final positioning of the box on the port assembly. The registration pins fit into the registration holes in the bottom of the box door.

7 Requirements

7.1 *Cassette Sizes* — The requirements and dimensions for the design of mechanical interface standard ports and boxes are given in this section. All dimensions of the interface between box and port are specified in reference to the port. Different sets of port dimensions are standardized to accommodate the following three cassette sizes:

- 100 mm (4 in.) — Per SEMI E1.2.
- 125 mm (5 in.) — Per SEMI E1.3 and SEMI E.4
- 150 mm (6 in.) — Per SEMI E1.5

7.2 *Port Design Requirements* — The general design of the port is shown in Figures 2 and 3. Specific dimensions for the different cassette sizes are given in SEMI E19.1, SEMI E19.2, and SEMI E19.3. Design requirements for the interface components are provided in ¶¶ 7.2.1 through 7.2.5. The general design of the port is shown in Figures 2 and 3. Specific dimensions for the different cassette sizes are given in SEMI E19.1, SEMI E19.2, and SEMI E19.3. Design requirements for the interface components are provided in ¶¶ 7.2.1 through 7.2.5.

7.2.1 *Port Door* — Dimensions A1 through A3 specify the port door top view. The gap between port door and port plate is not specified, but should be kept to a minimum distance to restrict particle movement.

SUPERSEDED

Documents
Document Sharing Hub
Full document details: SEMI E19-0117

7.2.2 *Guide Rails* — The inside distance of the guide rails on the four sides of the port is specified (B1 and B2). The guide rail can be continuous or in sections. If connected at the corners, the inside radius shall not exceed B9. The maximum height of the rail is given by B5. The guide rails include cavities. Two cavities are provided for the 100 mm (4 in.) port size or four cavities for the 125 mm (5 in.) and 150 mm (6 in.) port sizes.

7.2.3 *Latch Pins* — The 100 mm (4 in.) port requires two latch pins (C5), located on the port center line at a distance specified by C1 in the unactivated position. The 125 mm (5 in.) and 150 mm (6 in.) ports require four latch pins, positioned by C1 and C3. The displacement to move the latch pins from the unactivated (box door closed) to the activated (box door unlatched) position is specified by the linear dimension C2. The minimum available force per pin to unlatch and latch the box door is specified by F1 and F2. The latch pins can move in a linear or circular motion as long as the position of the activated pins falls within the target area dimensioned by C8.

7.2.4 *Registration Pins* — The three registration pins on the port door are located asymmetrically, and spaced by dimensions D1 through D4. The size of the pins is specified by D5 through D7.

7.2.5 *The Box* — The bottom surfaces of the box body and box door shall conform to the specified port dimensions. The upper part of the box body and top surface of the box door must fit and hold in place the wafer cassette specified by SEMI E1, for 100 mm (4 in.), 125 mm (5 in.), and 150 mm (6 in.) cassettes. Although the box dimensions are not explicitly specified by this Standard, the following requirements apply:

7.2.5.1 The bottom surface of the box door at its perimeter shall match the dimensions of the port door top (A1 through A3). The tolerances shall be chosen so that the box door does not extend over the port door in any instance, even when the port door is built to its minimal acceptable dimensions and potential variance between registration pins and holes is considered. This is to ensure interference free passage of the box door through the port opening.

7.2.5.2 The base of the box body shall fit freely but with close tolerance between the guide rails (B1, B2, and B9), which not only hold the box in place while the port is open, but also provide proper alignment for the closure of the box at the end of the open/shut cycle.

7.2.5.3 The bottom surface of the box requires three registration holes to engage with the registration pins on the port. The registration pins shall be positioned in the door bottom so that the registration pins prevent seating of the box with the port in the event that the box is improperly rotated by 180 degrees from the correct orientation. The correct orientation is illustrated in Figure 2.

7.2.5.4 The perimeter of the bottom surface of the box body shall be continuous (except possibly at the latch locations) and shall be positioned against the port surface. This positioning assures the activation of an optional sensor placed in an unspecified location along the port perimeter for the sensing of proper box placement.

7.2.5.5 Each box door latch requires a hole to engage its corresponding port latch pin. The hole shall be elongated to provide a target area for the activated pin (box door open) as shown by dimension C8. A protrusion from each latch shall engage with its corresponding cavity in the guide rail to prevent the removal of the box while the port is open.

7.2.5.6 The center of the cassette crossbar shall coincide with the center of the box door, with the cassette orientated as shown in Figure 2. The top surface of the box door requires registration bars that hold the cassette in place. The horizontal cassette movement is limited by the tolerances G2. The vertical position of the cassette while located on the box door is specified by the distance G1 between the top of the port surface and the bottom surface of the cassette.

7.2.5.7 The external top of the box shall not exceed the top of the cassette by more than two inches. This is to prevent possible interference between the box and the equipment.

8 References

8.1 The following articles describe the standard mechanical interface concept:

8.1.1 "The Challenge to Control Contamination: A Novel Technique for the IC Process." *The Journal of Environmental Sciences*, May/June 1984, pg. 23.

8.1.2 "SMIF, A Technology for Wafer Cassette Transfer in VLSI Manufacturing." *Solid State Technology*, July 1984, pg. 111.

SUPERSEDED

Documents Document Sharing Hub

Full document details: SEMI E19-0117

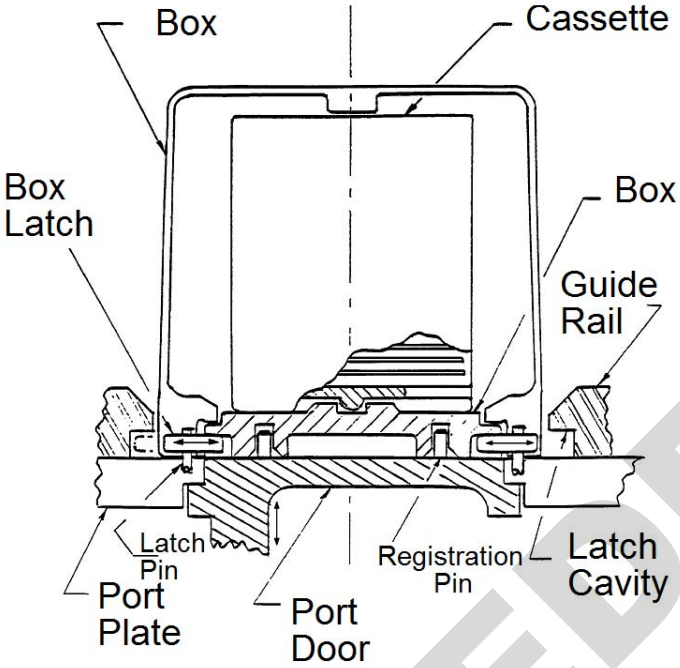

Figure 1
Port Terminology

SUPERSEDED

Documents
Document Sharing Hub
Full document details: SEMI E19-0117

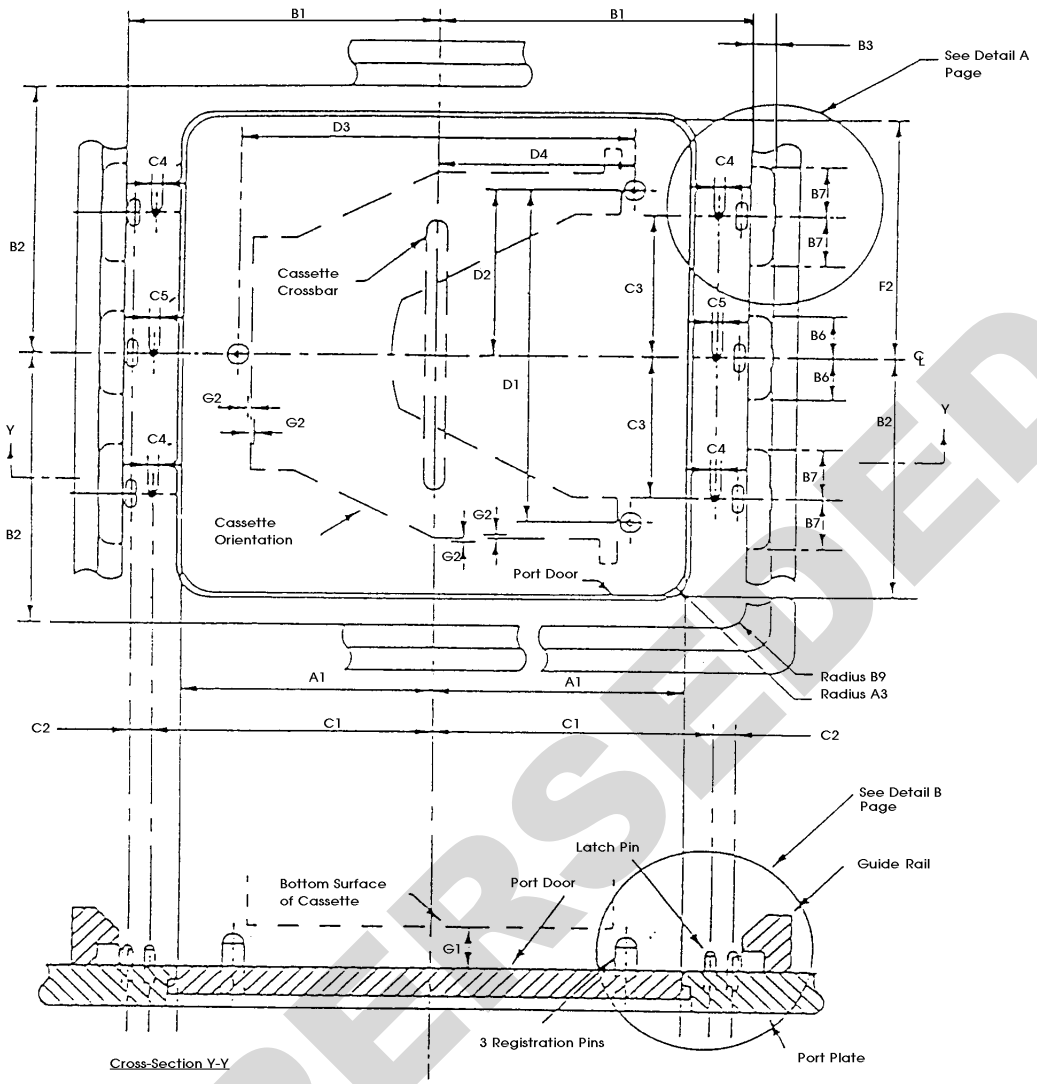

Figure 2

SUPERSEDED

Documents
Document Sharing Hub
Full document details: SEMI E19-0117